TRAINING CIRCULAR
No. 9-524

HEADQUARTERS
DEPARTMENT OF THE ARMY
Washington, DC, 29 October 1996

FUNDAMENTALS OF MACHINE TOOLS

Table of Contents

Page

Preface. ii

CHAPTER 1. Introduction to the Machine Shop 1-1

CHAPTER 2. Properties, Identification, and Heat Treatment of Metals 2-1

CHAPTER 3. Portable Machine Tools 3-1

CHAPTER 4. Drilling Machines 4-1

CHAPTER 5. Grinding Machines 5-1

CHAPTER 6. Sawing Machines 6-1

CHAPTER 7. Lathes 7-1

CHAPTER 8. Milling Operations 8-1

CHAPTER 9. Milling-Grinding-Drilling and Slotting Attachment (Versa-Mil) 9-1

APPENDIX A. Tables A-1

APPENDIX B. Weights and Measures B-1

APPENDIX C. Formulas C-1

GLOSSARY Glossary-1

REFERENCES References-1

INDEX Index-1

DISTRIBUTION RESTRICTION: Approved for public release; distribution is unlimited.

*This publication supersedes TC 9-524, 19 March 1990.

Preface

The purpose of this training circular is to provide a better understanding of power-driven machine tools. It also supplements technical manuals in the 9-3400-series covering power-driven machine tools.

One of the main objectives is for this publication is to be clear and understandable. Illustrations throughout this publication show the step-by-step process of many machine shop operations. The tables, charts, formulas, weights, and measurements in this publication can be a ready reference for selecting the proper tooling and math formulas for machining different materials.

The proponent of this publication is HQ TRADOC. Send comments and recommendations on DA Form 2028 directly to the Department of the Army, Training Directorate, ATTN: ATCL-AO, 801 Lee Avenue, Fort Lee, Virginia 23801-1713.

Unless this publication states otherwise, masculine nouns and pronouns do not refer exclusively to men.

Chapter 1

INTRODUCTION TO THE MACHINE SHOP

GENERAL INFORMATION

FORMS, RECORDS, AND REPORTS

Accurate records are valuable. Unit officers are responsible for completion of forms, records, and reports. DA Pam 738-750 lists records, reports, and authorized forms that are normally used for inspection and repair. Properly executed forms authorize and record repair or replacement of materiel. The forms, records, and reports document the work required, follow the progress of the work within the shops, and indicate the status of the material upon completion of repairs.

FIELD REPORT OF ACCIDENTS

The reports necessary to comply with the requirements of the Army Safety Program are prescribed in detail in AR 385-40. These reports are required for any accidents involving injury or damage. For a listing of all forms, refer to DA Pam 25-30.

Any deficiencies detected in the equipment covered herein should be immediately reported in accordance with DA Pam 738-750. These reports will be submitted as an Equipment Improvement Recommendation on SF 368.

DEFINITION OF MACHINE TOOLS

Machine tools are power-driven equipment designed to drill, bore, grind, or cut metal or other material.

LISTING OF MACHINE TOOLS

A complete list of machine tools including specialized machine tools currently authorized for issue is in Component List C 3405/70-lL.

SPECIALIZED MACHINE TOOLS

In view of the different design and operating features incorporated in specialized machine tools (cylinder boring machines, brake reliners, valve seat grinders. and so forth) by various manufacturers, no attempt has been made to include information pertinent to them in this manual. For complete information on these tools, see pertinent TM 9-3400-, TM 9-5100-, and TM 9-9000-series technical manuals covering the specific machines.

RISK-MANAGEMENT

To assure a high degree of safety, no machine -tool is to be used unless the risk management process as outlined below is understood and applied by the user and the supervisor:

1. Identify the potential hazard(s) that the machine tool can generate.

2. Assess the probability and severity of the hazard(s) by utilizing the Risk Assessment Matrix in figure 1-1. Risk acceptance decision authority for the risk levels is as follows:

a. Extremely high - CG, TRADOC; DCG, TRADOC; or the Chief of Staff, TRADOC.

b. High - Major subordinate commands, installation commanding generals, and school commandants of general officer rank.

c. Moderate and low - Delegated to the appropriate level in your unit chain of command.

3. Determine the risk control measures that will eliminate the hazard(s) or reduce the risk.

4. Implement the risk control measures before and during operation of the machine tool to eliminate the hazards or reduce their risks.

5. Supervise and evaluate the process. Enforce the established standards and risk control measures. Evaluate the effectiveness of the control measures and adjust/update them as necessary.

			PROBABILITY				
			Frequent	Likely	Occasional	Remote	Unlikely
			A	B	C	D	E
SEVERITY	Catastrophic	I	Extremely High		High		Moderate
	Critical	II				Moderate	
	Marginal	III	High	Moderate			
	Negligible	IV	Moderate			Low	

Figure 1-1. Risk assessment matrix.

PROBABILITY

A. **FREQUENT** - Individual soldier/item - Occurs often in the career/equipment service life. All soldiers or item inventory exposed - Continuously experienced during operation/mission.

B. **LIKELY** - Individual soldier/item - Occurs several times in career/equipment service life. - All soldiers or item inventory exposed. - Occurs frequently during operator/mission.

C. **OCCASIONAL** - Individual soldier/item. - Occurs sometimes in career/equipment service life. All soldiers or item inventory exposed. Occurs sporadically, or several times in inventory service or operations/mission.

D. **REMOTE** - Individual soldier/item - Possible to occur in career/equipment service life. All soldiers or item inventory exposed, Remote chance of occurrence - Expected to occur sometime in inventory service life or operation/mission.

E. **UNLIKELY** - Individual soldier/item - Can assume will not occur in career/equipment/service life. All soldiers or item inventory exposed. - Possible, but improbable; occurs only very rarely during operation/mission.

SEVERITY

I. CATASTROPHIC - Death or permanent total disability. System loss. Major property damage.

II CRITICAL - Permanent partial disability. Temporary total disability in excess of 3 months. Major system damage. Significant property damage.

III. MARGINAL - Minor injury. Lost workday accident with compensable injury/illness. Mirror system damage. Minor property damage.

IV. NEGLIGIBLE - First aid or minor supportive medical treatment. Minor system impairment.

RISK LEVELS

EXTREMELY HIGH - Loss of ability to accomplish mission.

HIGH - Significantly degrades mission capabilities in terms of required mission standards.

MODERATE- Degrades mission capabilities in terms of required missions standards.

LOW - Little or no impact on accomplishment of mission.

MACHINE SHOP WORK

SCOPE

Machine shop work is generally understood to include all cold-metal work by which an operator, using either power driven equipment or hand tools, removes a portion of the metal and shapes it to some specified form or size. It does not include sheet metal work and coppersmithing.

LAYING OUT WORK

"Laying out" is a shop term which means to scribe lines, circles, centers, and so forth, upon the surface of any material to serve as a guide in shaping the finished workpiece. This laying out procedure is similar to shop drawing but differs from it in one important respect. The lines on a shop drawing are used for reference purposes only and are not measured or transferred. In layout work, even a slight error in scribing a line or center may result in a corresponding or greater error in the finished workpiece, For that reason, all scribed lines should be exactly located and all scriber, divider, and center points should be exact and sharp.

SCRIBING LINES ON METAL

The shiny surface, found on most metals, makes it difficult to see the layout lines.

Layout dye (Figure 1-2), when applied to the metal surface, makes it easier for the layout lines to be seen. Layout dye is usually blue and offers an excellent contrast between the metal and the layout lines.

Before applying layout dye, ensure that all grease and oil has been cleaned from the work surface. Otherwise the dye will not adhere properly.

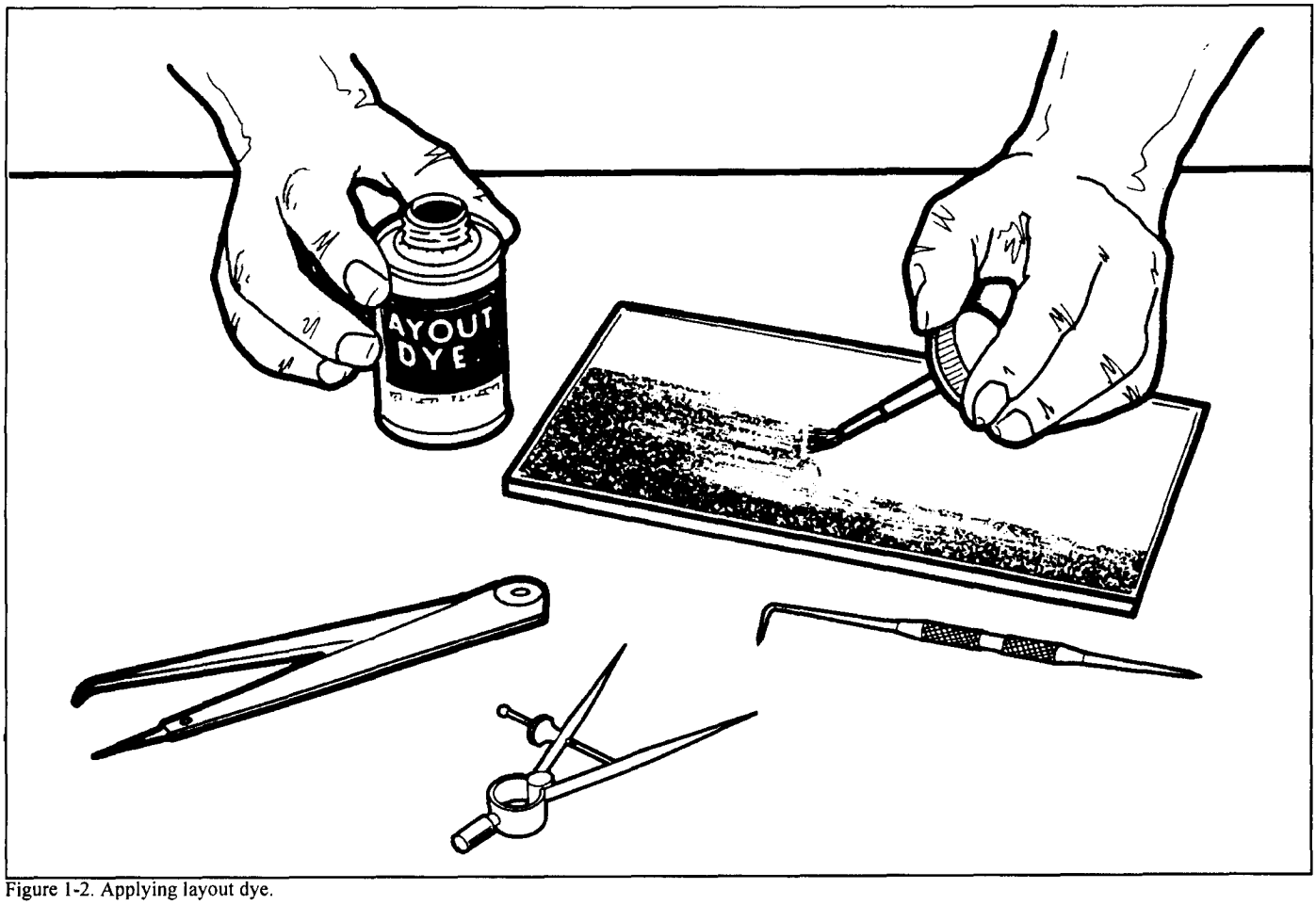

Figure 1-2. Applying layout dye.

COMMON LAYOUT TOOLS

Scriber

To obtain an accurate layout, fine lines must be scribed in the metal. A scriber (Figure 1-3) is the layout tool that is used to produce these lines. The point is made of hardened steel and is kept chain by honing on an oilstone.

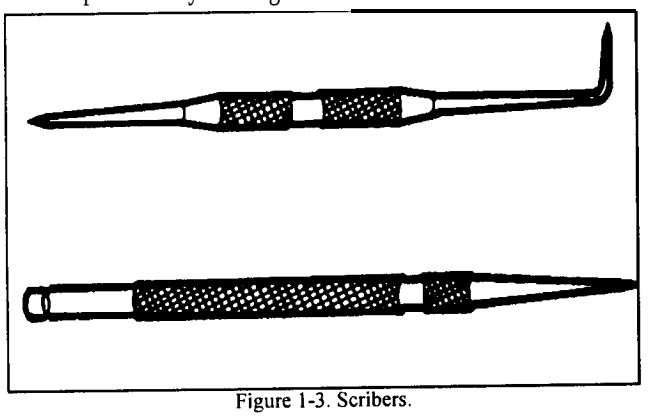

Figure 1-3. Scribers.

Divider

When laying out circles, arcs, and radii, it is best to use the divider (Figure 1-4). The legs of the divider must be of the same length and be kept sharp. The divider cart be used to lay out and measure distances (Figure 1-5). To set the divider to the correct length, place one point on an inch mark of a steel rule and open the divider until the other leg matches the correct measure-merit required (Figure 1-6).

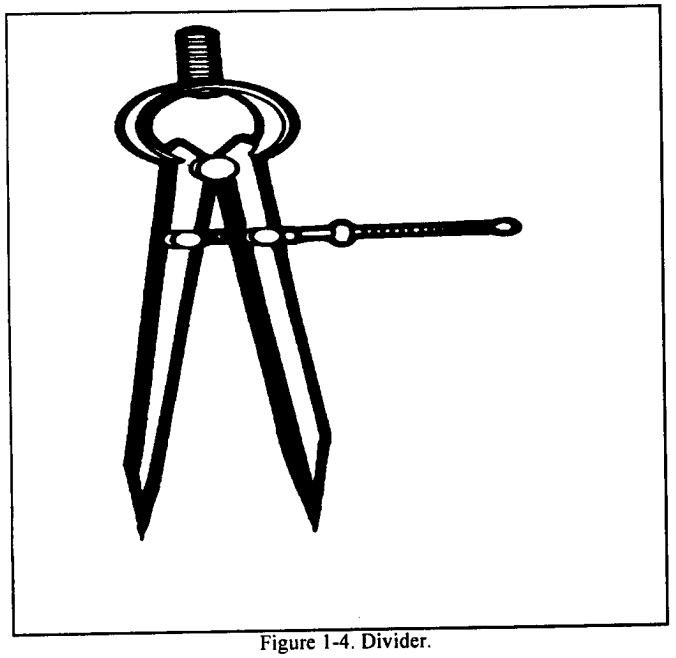

Figure 1-4. Divider.

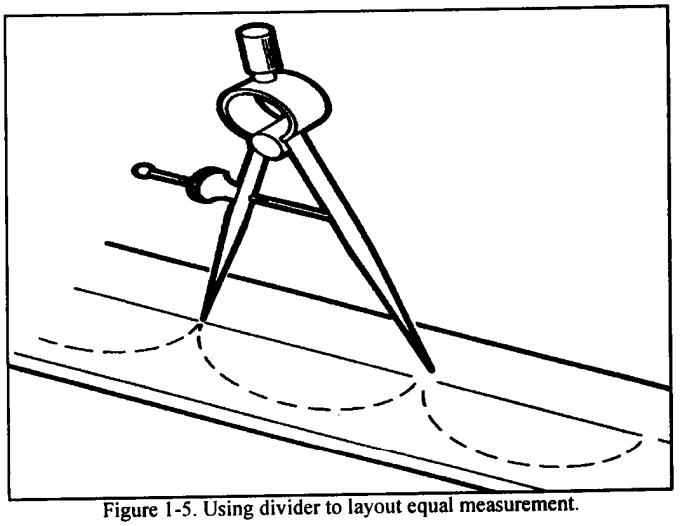

Figure 1-5. Using divider to layout equal measurement.

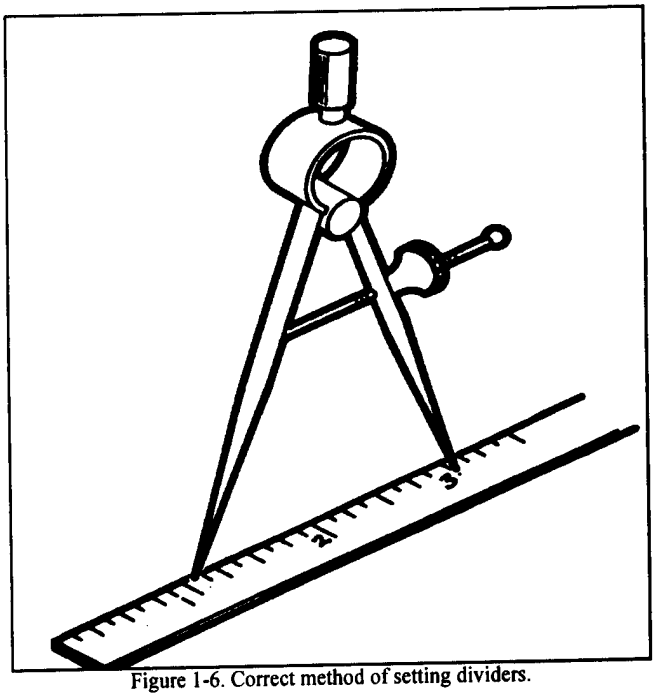

Figure 1-6. Correct method of setting dividers.

Trammel

When scribing circles, arcs, and radii that are too large to be produced with the divider, a trammel should be used (Figure 1-7). The trammel is made of three main parts: the beam, two sliding heads with scriber points, and an adjusting screw that is attached to one of the heads. The trammel can be made to scribe larger distances with the use of extension rods. This layout tool is set in the same manner as the divider.

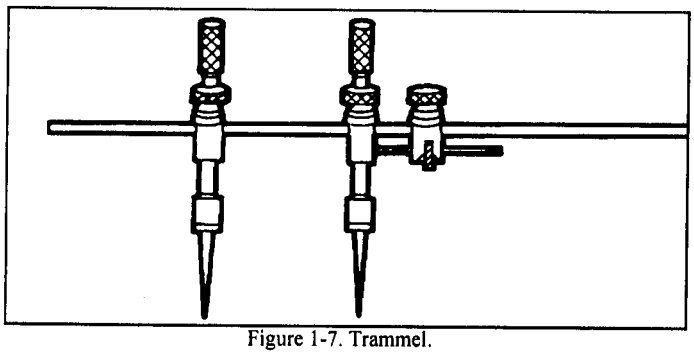

Figure 1-7. Trammel.

Hermaphrodite Caliper

The hermaphrodite caliper (Figure 1-8) is a tool used to lay out lines that are parallel with the edges of the workpiece (Figure 1-9). It can also be used to locate the center of cylindrical shaped workplaces (Figure 1-10).

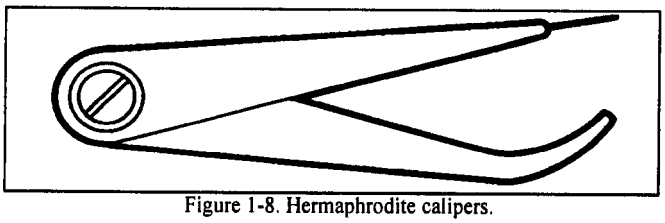

Figure 1-8. Hermaphrodite calipers.

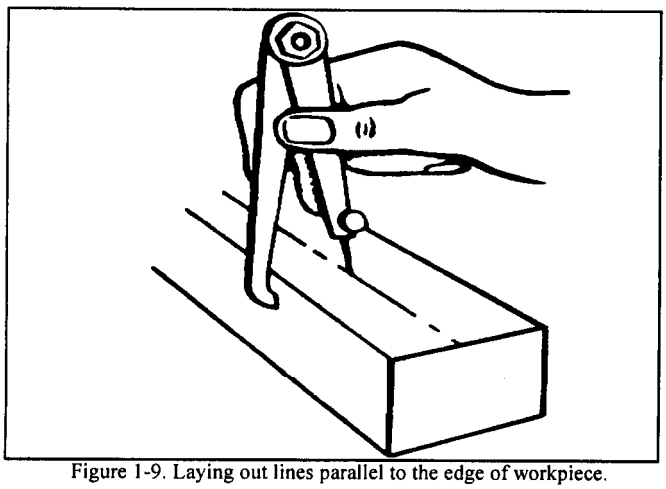

Figure 1-9. Laying out lines parallel to the edge of workpiece.

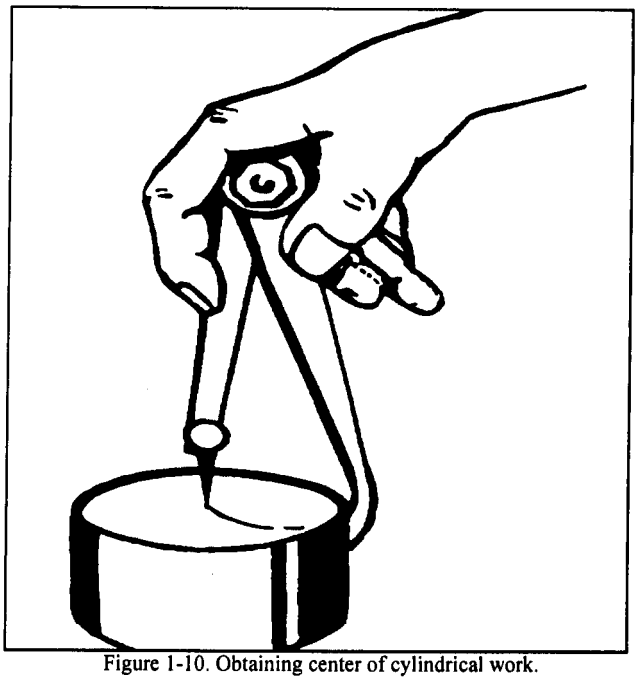

Figure 1-10. Obtaining center of cylindrical work.

Surface Gage

A surface gage (Figure 1-11) is used for many purposes, but is most often used for layout work. The gage can be used to scribe layout lines at any given distance parallel to the work surface (Figure 1-12).

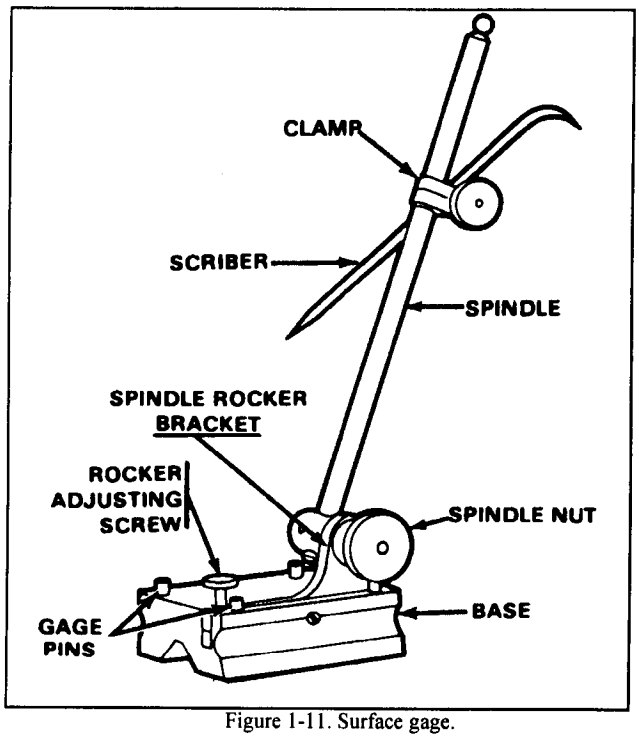

Figure 1-11. Surface gage.

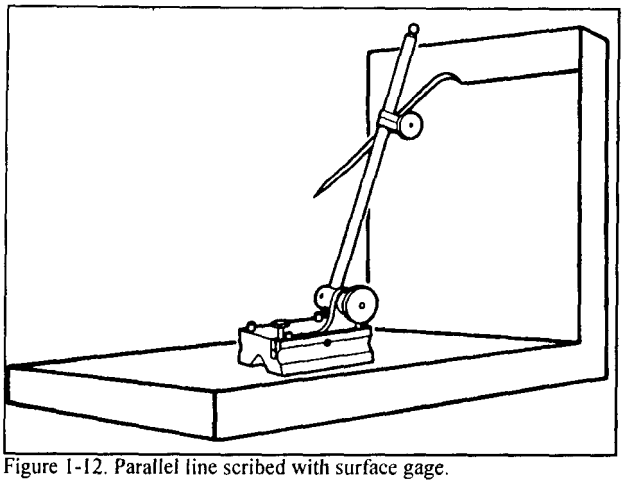

Figure 1-12. Parallel line scribed with surface gage.

The spindle may be adjusted to any position with respect to the base and tightened in place with the spindle nut (Figure 1-11). The rocker adjusting screw provides for finer adjustment of the spindle by pivoting the spindle rocker bracket. The scriber can be positioned at any height and in any desired direction on the spindle by adjusting the scriber. A surface plate and combination square (Figure l-13) are needed to set the surface gage to the correct dimension.

Surface Plate

A surface plate (Figure l-14) provides a true, smooth, plane surface. It is used in conjunction with surface and height gages as a level base on which the gages and the workpiece are placed to obtain accurate measurements. These plates are made of semi-steel or granite and should never be used for any job that would scratch or nick the surface.

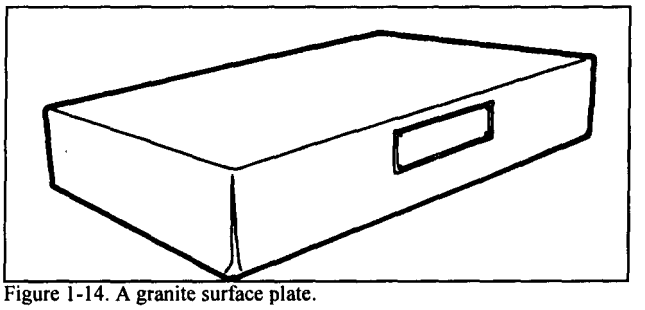

Figure 1-14. A granite surface plate.

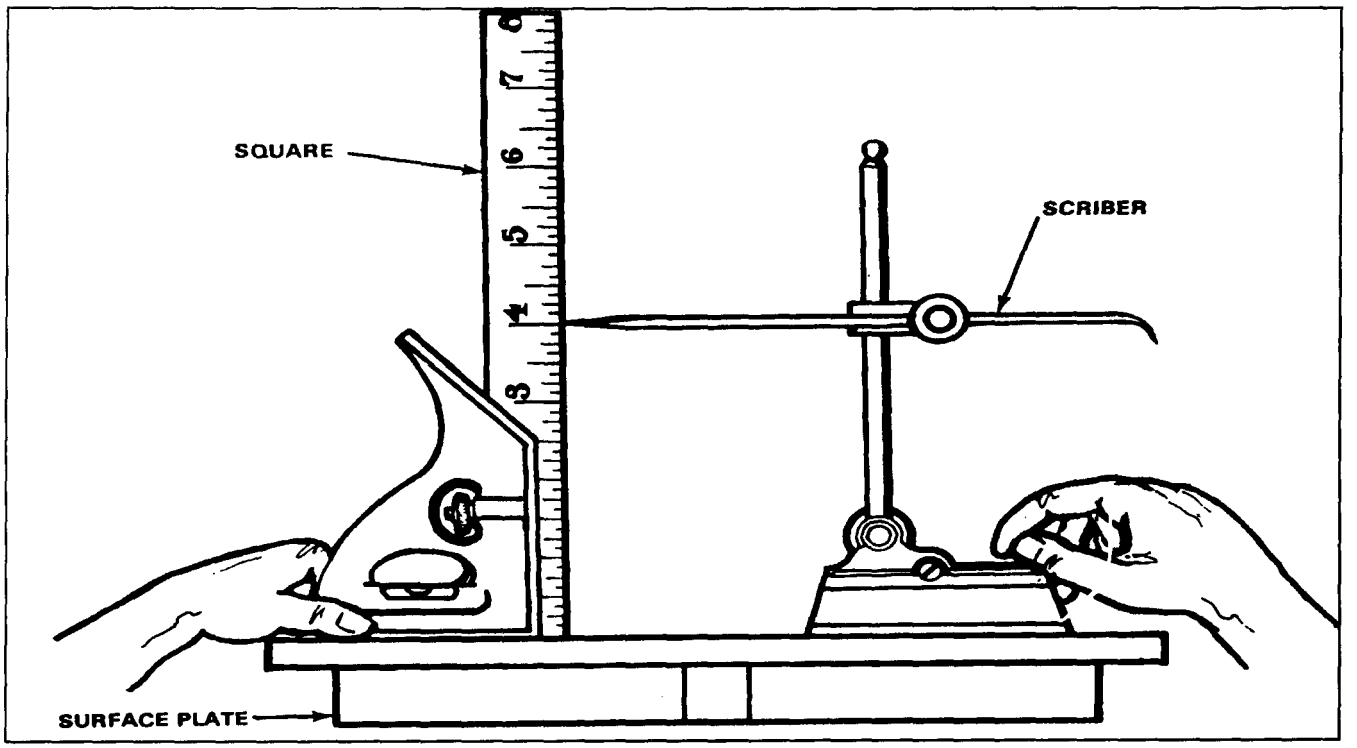

Figure 1-13. Setting surface gage scriber on surface plate 2.

Vernier Height Gage

The vernier height gage (Figure 1-15) is a caliper with a special foot block to adapt it for use on a surface plate. Height gages are available in several sizes: the most common are the 10, 18, and 24 inch gages in English measure and the 25 and 46 cm gages in metric measure. Like the vernier caliper, these height gages are graduated in divisions of 0.025 inch and a vernier scale of 25 units for reading measurements to thousandths of an inch. Always be sure the bottom of the foot block (Figure 1-15) is clean and free from burrs.

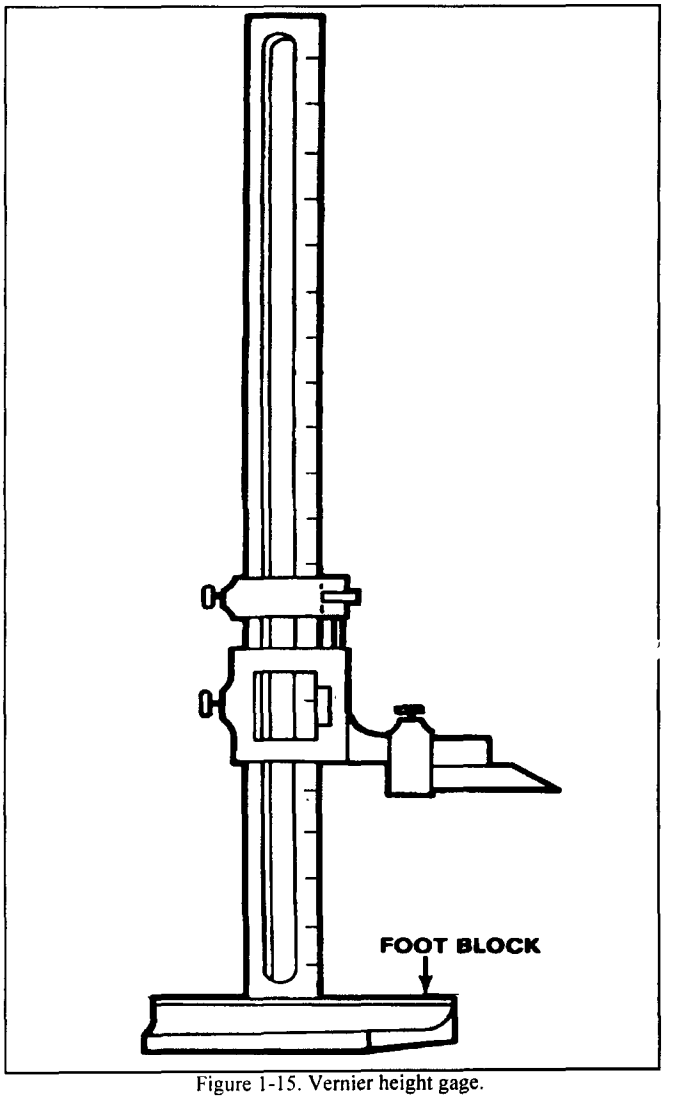

Figure 1-15. Vernier height gage.

Figure 1-16 shows the height gage with a tungsten carbide marker. This marker is used to lay out lines on glass, hardened steel. or other hard materials.

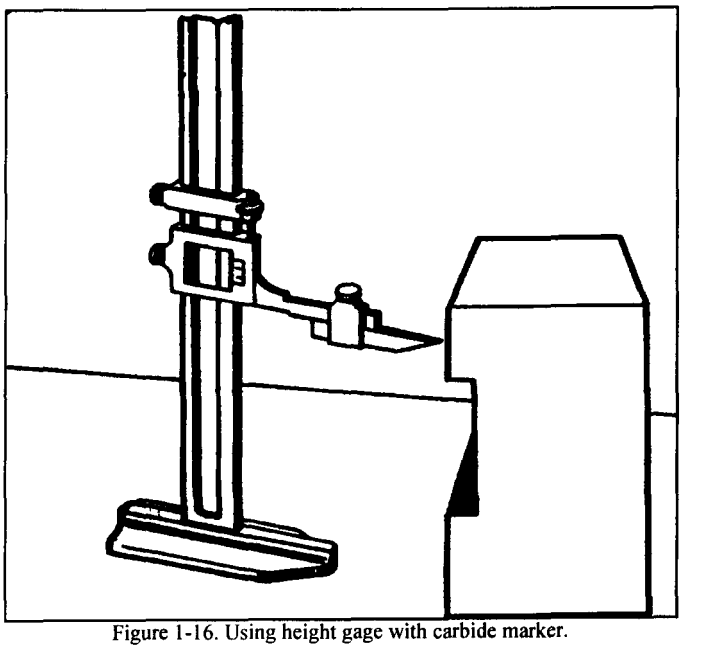

Figure 1-16. Using height gage with carbide marker.

Figure 1-17 illustrates the use of an offset scriber with the height gage. This scriber reaches below the gage base. Do not attempt to adjust the sliding jaw while it is clamped to the upright beam.

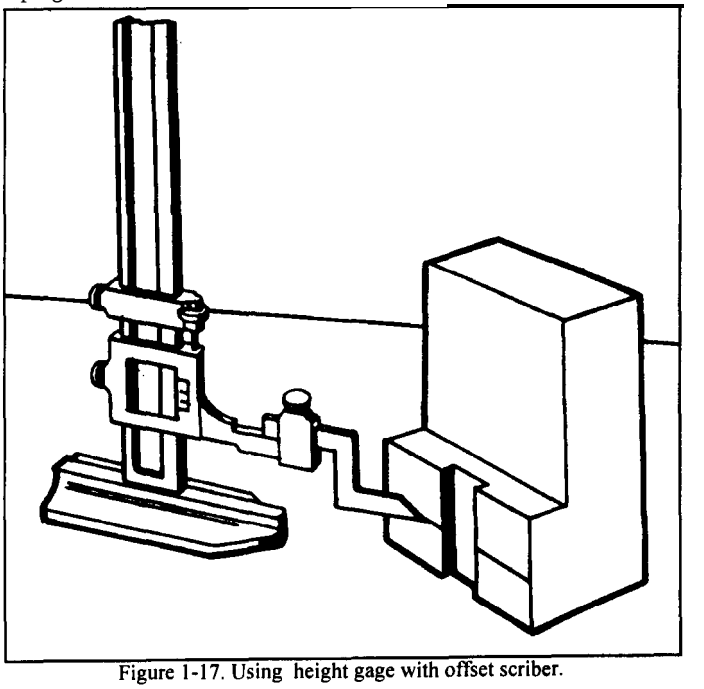

Figure 1-17. Using height gage with offset scriber.

Combination Square Set

The combination square set (Figure 1-18) is used for a number of layout operations. The set consists of a blade (graduated rule), square head, protractor, and center head.

Blade

The blade is designed to allow the different heads to slide along the blade and be clamped at any desired location. The groove in the blade is concave to eliminate dirt buildup and permit a free and easy slide for the heads. By removing all the heads, the blade may be used alone as a rule.

Square Head

The square head is designed with a 45° and 90° edge, which makes it possible to be used as a try square and miter square. By extending the blade below the square, it can be used as a depth rule. The square head can also be used as a level.

Protractor Head

The protractor head is equipped with a revolving turret graduated in degrees from 0 to 180 or to 90 in either direction. It is used to measure or lay out angles to an accuracy of 1°.

Center Head

The center head, when inserted on the blade, is used to locate and lay out the center of cylindrical workplaces.

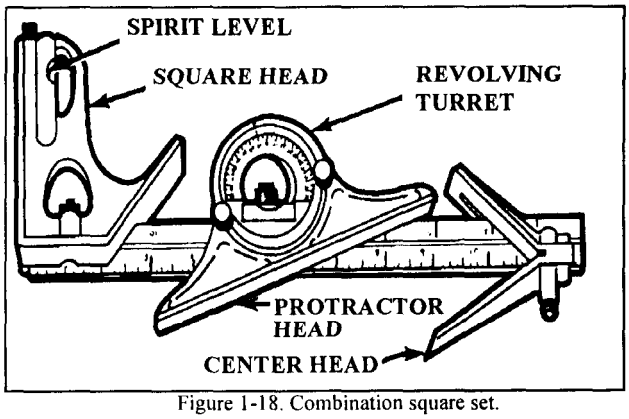

Figure 1-18. Combination square set.

Bevel Protractor

The bevel protractor (Figure 1-19) consists of an adjustable blade with a graduated dial. The blade is usually 12 inches long and 1/16 inch thick. The dial is graduated in degrees through a complete circle of 360°. The most common use for this tool is laying out precision angles. The vernier scale is used for accurate angle adjustments and is accurate to 5 minutes or 1/12°.

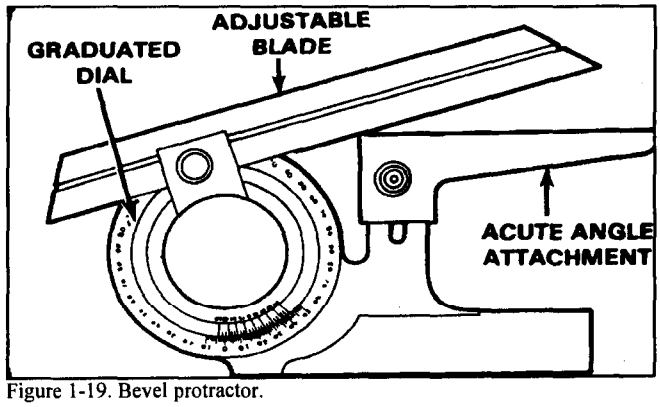

Figure 1-19. Bevel protractor.

STEPS IN MAKING A LAYOUT

Planning before beginning any layout is one of the most important steps. Each job may require different layout tools depending on the accuracy needed; however, there are certain procedures which should be followed in any layout. Figure 1-20 shows a typical layout.

- Study the shop drawing or blueprint carefully before you cut off the stock. Allow enough material to square the ends if required.
- Remove all oil and grease from the work surface and apply layout dye.
- Locate and scribe a reference or base line. All the other measurements should be made from this. If the workpiece already has one true edge, it can be used in place of the reference line.
- Using the base line as a reference line, locate and scribe all center lines for each circle, radius, or arc.
- Mark the points where the center lines intersect using a sharp prick punch.
- Scribe all circles, radii, and arcs using the divider or trammel.
- Using the correct type protractor, locate and scribe all straight and angular lines.
- Scribe all lines for internal openings.
- All layout lines should be clean, sharp, and fine. Reapply layout dye to all messy, wide, or incorrect lines and rescribe.

The layout tools mentioned in this section are only the most commonly used. For more information on the use and care of these tools and other layout and measuring tools, refer to TM 9-243.

JIGS AND FIXTURES

The primary purpose of jigs and fixtures is to align the tool and hold the workpiece properly during machining. A fixture is a device which holds the work while cutting tools are in operation. It differs from a jig in that it has no guides or special arrangements for guiding tools. A jig is also a fixture for locating or holding the work and guiding the cutting tool in operations such as drilling, reaming, counterboring, and countersinking.

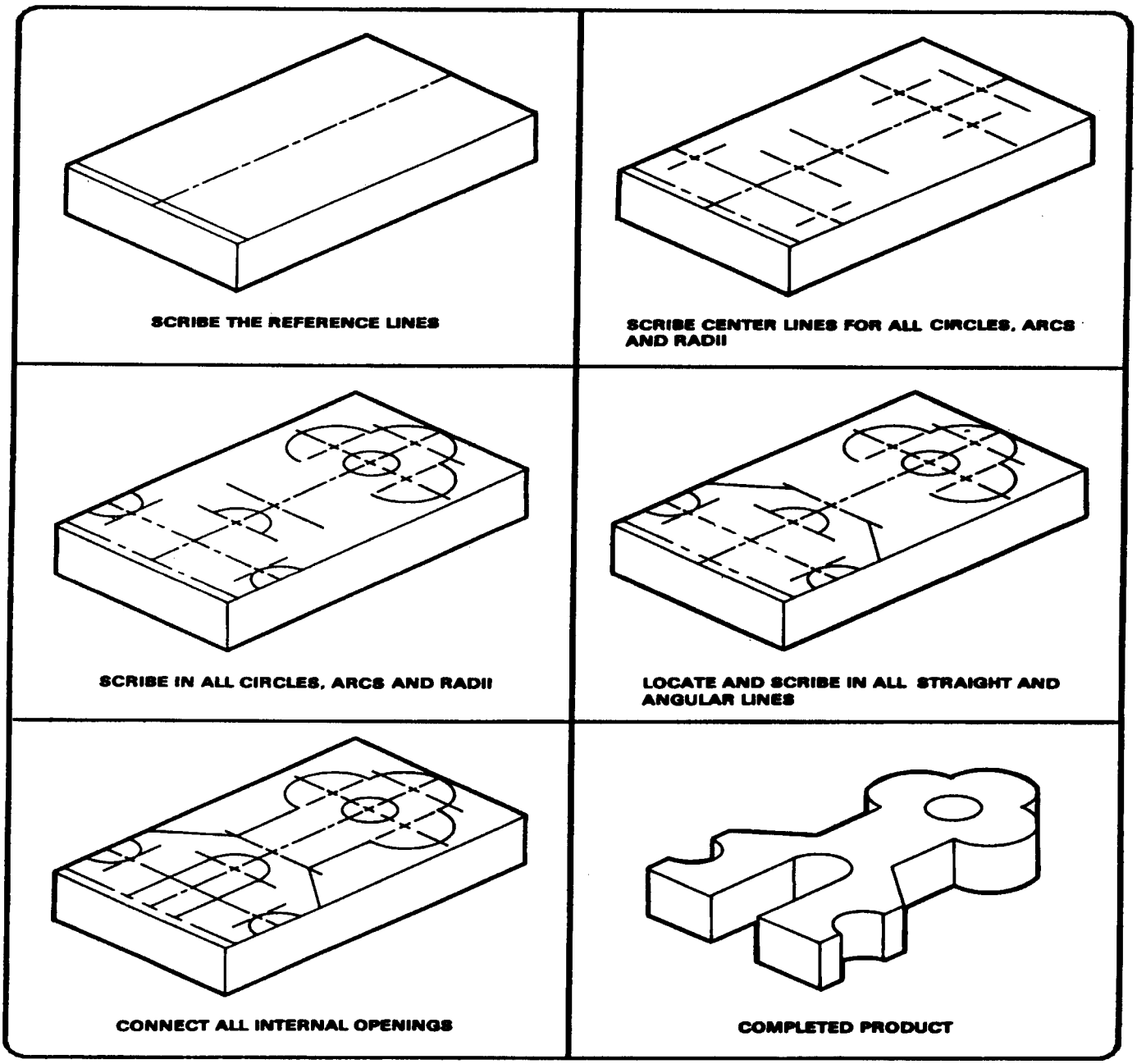

Figure 1-20. Typical Layout.

Jigs and fixtures can greatly reduce the cost of manufacturing large quantities of parts. Their use is also an advantage when the interchangeability and accuracy of the finished products are important. They also can be used in low or limited production jobs if extreme accuracy must be maintained. One of their greatest advantages is that relatively unskilled labor can accomplish the job using these special tools.

MECHANICAL DRAWINGS AND BLUEPRINTS

Mechanical Drawings

A mechanical drawing, made with special instruments and tools, gives a true representation of an object to be made, including its shape, size, description, material to be used, and method of manufacture.

Blueprints

A blueprint is an exact duplicate of a mechanical drawing. These are the most economical and satisfactory working drawings in use. They do not soil easily and are comparatively easy to read. Blueprint paper is a good grade of white paper coated with a chemical solution. making it greenish yellow. A blueprint is made by placing a tracing of a mechanical drawing on a sheet of blueprint paper and exposing it to light. During exposure. the light penetrates where there are no lines or printing on the tracing but does not penetrate where there are lines or printing. The print is then washed in water. which changes the exposed chemical to a dark blue and washes the chemical off where lines and printing prevented exposure. In other words. the process leaves white lines on dark blue background.

Working From Drawings

Detail prints usually show only the individual part or piece that must be produced. They show two or more orthographic (straight-on) views of the object. and in special cases. they may show an isometric projection. without dimension lines, near the upper right corner. An isometric projection shows how the part will look when made. Each drawing or blueprint carries a number. located in the upper left-hand corner and in the title box in the lower right-hand corner of the print. The title box also shows the part name, the scale used, the pattern number. the material required. the assembly or subassembly print number to which the part belongs. the job order number, the quantity and date of the order. and the names or initials of the persons who drew. checked. and approved the drawings (Figure 1-20). Accurate and satisfactory fabrication of a part described on a drawing depends upon the following:

- Correctly reading the drawing and closely observing all data on the drawing.
- Selecting the correct tools and instruments for laying out the job.
- Use the baseline or reference line method of locating the dimensional points during layout. thereby avoiding cumulative errors.
- Strictly observing tolerances and allowances.
- Accurate gaging and measuring of work throughout the fabricating process.
- Giving due consideration when measuring for expansion of the workpiece by heat generated by the cutting operations. This is especially important when checking dimensions during operations, if work is being machined to close tolerances.

Limits of Accuracy

Work must be performed within the limits of accuracy specified on the drawing. A clear understanding of tolerance and allowance will help you avoid making small, but potentially large errors. These terms may seem closely related but each has a very precise meaning and application. The paragraphs below point out the meanings of these terms and the importance of observing the distinctions between them.

Tolerance

Working to the absolute or exact basic dimension is impractical and unnecessary in most instances: therefore, the designer calculates. in addition to the basic dimensions, an allowable variation. The amount of variation. or limit of error permissible is indicated on the drawing as plus or minus (+) a given amount. such as + 0.005 or + 1/64. The difference between the allowable minimum and the allowable maximum dimension is tolerance. When tolerances are not actually specified on a drawing, fairly concrete assumptions can be made concerning the accuracy expected. by using the following principles, For dimensions which end in a fraction of an inch. such as 1/8, 1/16, 1/32, 1/64. consider the expected accuracy to be to the nearest 1/64 inch. When the dimension is given in decimal form the following applies: If a dimension is given as 2.000 inches, the accuracy expected is +0.005 inch: or if the dimension is given as 2.00 inches, the accuracy expected is +0,010 inch. The +0.005 is called in shop terms, "plus or minus five thousandths of an inch." The + 0.010 is called "plus or minus ten thousandths of an inch."

Allowance

Allowance is an intentional difference in dimensions of mating parts to provide the desired fit. A clearance allowance permits movement between mating parts when assembled. For example, when a hole with a 0.250-inch diameter is fitted with a shaft that has a 0.245-inch diameter, the clearance allowance is 0.005 inch. An interference allowance is the opposite of a clearance allowance. The difference in dimensions in this case provides a tight fit. Force is required when assembling parts which have an interference allowance. If a shaft with a 0.251-inch diameter is fitted in the hole identified in the preceding example, the difference between the dimensions will give an interference allowance of 0.001 inch. As the shaft is larger than the hole, force is necessary to assemble the parts.

Precautions

Be sure you have the correct print for the part to be made or repaired. You want the print which has not only the correct title, but also the correct assembly number. Never take a measurement with a rule directly from the print because the tracing from which the print was made may not have been copied from the original drawing perfectly and may contain scaling errors. Also, paper stretches and shrinks with changes in atmospheric conditions. Dimensions must be taken only from the figures shown on the dimension lines. Be very careful in handling all blueprints and working drawings. When they are not in use, place them on a shelf, in a cabinet, or in a drawer. Return them to the blueprint file as soon as the job is done. Blueprints and working drawings are always valuable and often irreplaceable. Make it a point never to mutilate, destroy, or lose a blueprint.

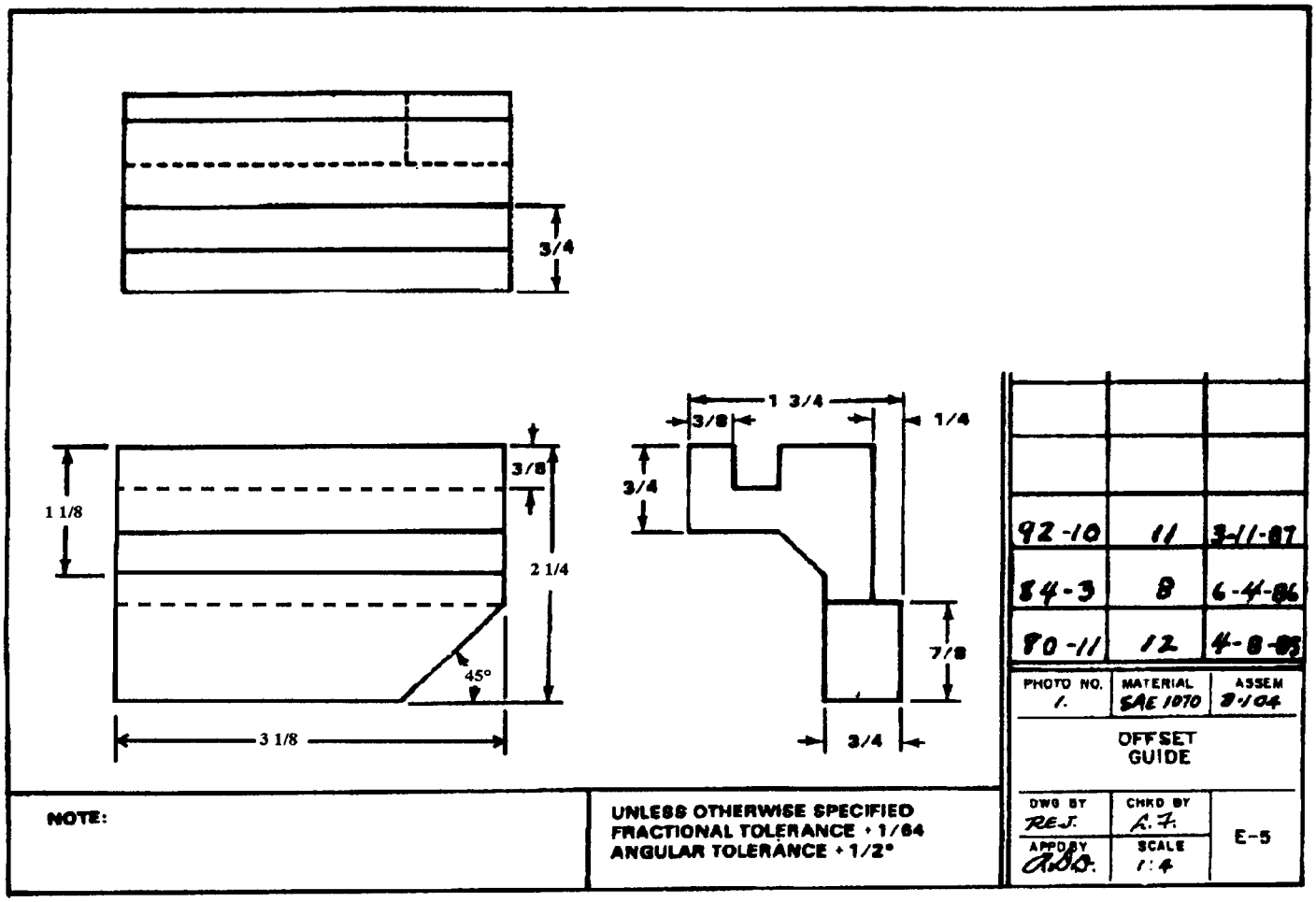

Figure 1-21. Typical blueprint.

GENERAL SHOP SAFETY

All tools are dangerous if used improperly or carelessly. Working safely is the first thing the user or operator should learn because the safe way is the correct way. A person learning to operate machine tools must first learn the safety regulations and precautions for each tool or machine. Most accidents are caused by not following prescribed procedures. Develop safe work habits rather than suffer the consequences of an accident.

Most of the safety practices mentioned in this section are general in nature. Safety precautions for specific tools and machines are described in detail in the chapters along with the description of the equipment. Study these carefully and be on the alert to apply them.

EYE PROTECTION

Using eye protection in the machine shop is the most important safety rule of all. Metal chips and shavings can fly at great speeds and distances and cause serious eye injury. Safety glasses must be worn when working with handcutting tools, since most handcutting tools are made of hardened steel and can break or shatter when used improperly.

There are many different types of safety glasses available in the supply system; however, the ones that offer the best protection are the safety glasses with side shields. Safety goggles should be worn over prescription glasses. For specific information about eye protection, contact the Occupational Health Clinic or refer to TB MED 586.

HAZARDOUS NOISE PROTECTION

Noise hazards are very common in the machine shop. High intensity noise can cause permanent loss of hearing. Although noise hazards cannot always be eliminated, hearing loss is avoidable with ear muffs, ear plugs, or both. These are available through the local supply system or from the Occupational Health Clinic. Ear plugs must be properly fitted by qualified personnel. For specific information on hearing protection, refer to TB MED 501.

FOOT PROTECTION

The floor in a machine shop is often covered with razor-sharp metal chips, and heavy stock may be dropped on the feet. Therefore, safety shoes or a solid leather shoe must be worn at all times. Safety shoes are available in the supply system. These have a steel plate located over the toe and are designed to resist impact. Some safety shoes also have an instep guard.

GRINDING DUST AND HAZARDOUS FUMES

Grinding dust from abrasive wheels is made up of extremely fine particles of the metal and the wheel. Some grinding machines are equipped with a vacuum dust collector. When operating a grinder without a vacuum, wear an approved respirator to avoid inhaling the dust. Whenever possible, use coolant when grinding. This will aid in dust control. Grinding dust can be very dangerous to your health, especially beryllium or parts used in nuclear systems. These materials require careful control of grinding dust.

Metals such as zinc give off toxic fumes when heated above their boiling point. Inhaling these fumes may cause temporary sickness, or death. The fumes produced from lead and mercury are very harmful, as their effect is cumulative in the body and can cause irreversible damage. When unsure of the materials being machined, it is advisable to wear a respirator. For more specific information on respirator safety, refer to TB MED 502.

PROPER LIFTING PROCEDURES

Using improper lifting procedures may result in a permanent back injury. Back injury can be avoided if the correct lifting procedures are followed. When lifting heavy or large objects, get some assistance or use a hoist or forklift.

Objects within your ability can be lifted safely as long as the following procedures are followed:

- Keep your back straight.
- Squat down, bending at the knees.
- Use the leg muscles to do the work and lift slowly. Do not bend over the load as this will put excessive strain on your spine.
- Carry the object where it is comfortable, and pay close attention to where you are walking and objects around you.
- When placing the object back on the floor, use the same procedures as when it was lifted.

ELECTRICAL SAFETY

Exposure to electrical hazard will be minimal unless the operator becomes involved with machine repair. The machine operator is mostly concerned with the on and off switch on the machine tool. However, if adjustments or repairs must be made, the power source should be disconnected. If the machine tool is wired permanently, the circuit breaker should be switched off and tagged with an appropriate warning statement. Most often the power source will not be disconnected for routine adjustment such as changing machine speeds. However, if a speed change involves a belt change, make sure that no other person is likely to turn on the machine while the operator's hands are in contact with belts and pulleys.

SAFETY RULES FOR MACHINE TOOLS

Since different cutting tools and machining procedures are used on various machine tools, the safety precautions for each may vary. The following are general safety rules for any machine tool:

- Gears, pulleys, belts, couplings, ends of shafts having keyways, and other revolving or reciprocating parts should be guarded to a height of 6 feet above the floor. The guards should be removed only for repairing or adjusting the machine and must be replaced before operating it.
- Safety setscrews should be used in collars and on all revolving or reciprocating members of the machine tool or its equipment.
- Do not operate any machine tool without proper lighting.
- Never attempt to operate any machine tool until you fully understand how it works and know how to stop it quickly.
- Never wear loose or torn clothing and secure long hair, since these items can become caught in revolving machine parts. Ties should be removed and shirt sleeves should be rolled up above the elbow.
- Gloves should never be worn when operating machinery except when absolutely necessary.
- Always stop the machine before cleaning it or taking measurements of the workpiece.
- Do not lubricate a machine while it is in motion. Injury to the operator and damage to the machine may result from this practice.
- Never remove metal chips, turnings, or shavings with your hands; they may cause a serious cut. If the shavings are long, stop the machine and break them with pliers or a bent rod, and then brush chips off the machine. Remove cast-iron chips, which break into small pieces, with a brush. Never wipe away chips when the machine is operating.
- Always wear safety glasses or goggles while operating machine tools. Also, wear respiratory protection if operation creates hazardous dust. All persons in the area where power tools are being operated should also wear safety eye protection and respirators as needed.
- Know where tire extinguishers are located in the shop area and how to use them.
- Never wear jewelry while working around machine tools. Rings, watches, or bracelets maybe caught in a revolving part which could result in the hand being pulled into the machine.
- Avoid horseplay. Tools are very sharp and machines are made of hard steel. An accidental slip or fall may cause a serious injury.
- Never use compressed air without a safety nozzle to clean machines or clothing. It will blow sharp, dangerous metal chips a long distance.
- Keep the floor around machines free of tools, stock, oil, grease, and metal chips. Tripping over metal on the floor, especially round bars, can cause dangerous falls. Wipe up all oil, grease, and cutting fluid spills on the floor as soon as possible to prevent a fall. Metal chips are very sharp and can easily become embedded in the soles of shoes, making them very slippery, especially when walking on a concrete floor.
- Never place tools or other materials on the machine table. Cluttering up a machine with tools or materials creates unsafe working conditions. Use a bench or table near the machine for this purpose.
- Always use a rag when handling sharp cutters such as milling cutters and end mills.

- Do not expose power tools to rain or use in damp or wet locations.
- Always secure the workpiece. Use clamps or a vise. It is safer than using your hands, and it frees both hands to operate the tool
- Do not abuse electrical cords. Never carry a tool by its cord or yank it to disconnect it from a receptacle. Keep electrical cords away from heat, oil, and sharp edges. Have damaged or worn power cords and strain relievers repaired or replaced immediately.
- Remove adjusting keys and wrenches. Form a habit of checking to see that keys and wrenches are removed from tools before turning them on.
- Do not operate any machine tool while under the influence of drugs, alcohol, or any medication that could cause drowsiness.

SAFETY COLOR CODE MARKINGS AND SIGNS

USE OF PAINT

All maintenance shops and work areas should be marked with the correct colors to identify hazards, exits, safe walkways, and first-aid stations. It is acceptable to use material other than paint, such as decals and tapes, in the appropriate, similar colors. Listed below are the main colors authorized for use in maintenance shops.

Red color markings should be used to identify the following equipment or locations:

- Fire alarm boxes (pull boxes).
- Fire blanket boxes.
- Fire extinguishing containers.
- Fire extinguishers, unless painting is unnecessary. For large areas and when the extinguisher is not readily visible to the area occupants, use red on the housing wall or support above the extinguisher to show its location.
- Fire hose locations.
- Fire pumps.
- Fire sirens.
- Sprinkler piping.
- Fire buckets.
- Fire reporting telephone stations.
- Store all idle tools in a safe, dry place.
- Provide visitors to the work area required personnel protection equipment.
- An exception may be made to comply with local laws or when current facilities provide green exit signs.
- Emergency stop buttons for electrical machinery.
- Emergency stop bars on hazardous machines.
- Yellow color markings should be used to identify the following equipment or locations:
- Industrial areas where particular caution is needed, such as handrails, guardrails, bottom edge of overhead doors, or top and bottom treads of stairways.
- Fire hydrant barrels.
- Caution signs.
- Piping systems containing flammable material.
- Waste containers for highly combustible material.
- A hazardous area or a safe aisle within a hazardous area.

- Lower pulley blocks and cranes.
- Coverings and guards for guy wires.
- Pillars, posts, or columns that are physical or shop hazards.
- Fixtures suspended from ceilings or walls that extend into normal operating areas.
- Corner markings for storage piles.
- Exposed and unguarded edges of platforms, pits, and wells.

Green color markings normally on a white color background should be used for the following equipment or locations:

- First-aid equipment.
- First-aid dispensaries.
- Stretchers.
- Safety starting buttons on machinery.
- Safety instruction signs.

Black and white are the basic colors for designating housekeeping and interior traffic markings. The following are examples of where solid white, solid black, single-color striping, alternate stripes of black and white, or black and white squares will be used.

- Locations and width of aisles in nonhazardous areas.
- Dead ends of aisles or passageways.
- Directional signs.
- Locations of refuse cans.
- White corners of rooms or passageways.
- Clear floor area around first-aid, fire-fighting, and their emergency equipment.

Blue color markings are used on the outside of switch boxes electrical controls that are the starting point or power source for hazardous electrical machinery or equipment.

Orange markings are used to designate dangerous parts of machines or energized equipment, including electrical conduits, which may cut, crush, shock, or injure.

CATEGORIES OF SIGNS

Signs are placed in categories according to their purpose. Use the examples in the following paragraphs as guides when choosing the correct sign design to display a message. In overseas commands, the use of International Standard Safety Signs is encouraged and authorized.

WORDING OF SIGNS

Ensure that the wording of any sign-

- Is concise and easy to read.
- Contains enough information to be easily understood.
- Is designed for the message to be carried in a picture when appropriate.
- Is a positive rather than a negative statement when appropriate.
- Is bilingual with the second language common to the local personnel when appropriate.

SIGN INSPECTION AND MAINTENANCE

Signs should be inspected regularly and maintained in good condition. They should be kept clean, well illuminated, and legible. Replace or repair damaged or broken signs. All signs will be designed with rounded or blunt corners and with no sharp projections. Put the ends or heads of bolts or other fastening devices where they will not cause a hazard.

SELECTION OF SIGN SIZE

When choosing a sign, consider dimensions that will permit economical use of standard size material. Base the size of the sign on the following:

- Location at which the sign will be placed.
- Character of the hazard involved.
- Purpose of the sign.
- Distance from which the sign should be legible.

REQUIRED SIGN COLORS

All signs require a predominant color based on the sign's purpose. Below are the five types of signs and their predominant color.

- Danger signs: RED.
- Caution signs: YELLOW.
- Safety instruction signs: GREEN.
- Directional signs: BLACK.
- Informational signs: A variety of colors may be used, except for red, yellow, or magenta (purple).

DANGER SIGNS

Danger signs should only be used when immediate hazard exists. There will be no variations in the type or design of signs posted to warn of specific danger. All personnel will be instructed that danger signs indicate immediate danger and that special precautions are necessary.

CAUTION SIGNS

Caution signs should be used only to warn against potential hazards or to caution against unsafe practices. All personnel will be instructed that a caution sign indicates a possible hazard against which proper precautions will be taken.

DIRECTIONAL SIGNS

Directional signs should be used in sufficient numbers to indicate the way to stairways, fire escapes, exits, and other locations.

Many other safety media are available for use in military maintenance shops.

Chapter 2

PROPERTIES, IDENTIFICATION, AND HEAT TREATMENT OF METALS

GENERAL

PURPOSE

This chapter contains basic information pertaining to properties and identification of metal and heat-treating procedures used for metals. For more specific information on metal and heat-treating techniques, refer to TM 43-0106.

METAL CLASSIFICATION

All metals may be classified as ferrous or nonferrous. A ferrous metal has iron as its main element. A metal is still considered ferrous even if it contains less than 50 percent iron, as long as it contains more iron than any other one metal. A metal is nonferrous if it contains less iron than any other metal.

Ferrous

Ferrous metals include cast iron, steel, and the various steel alloys, The only difference between iron and steel is the carbon content. Cast iron contains more than 2-percent carbon, while steel contains less than 2 percent. An alloy is a substance composed of two or more elements. Therefore, all steels are an alloy of iron and carbon, but the term “alloy steel” normally refers to a steel that also contains one or more other elements. For example, if the main alloying element is tungsten, the steel is a “tungsten steel” or “tungsten alloy.” If there is no alloying material, it is a “carbon steel.”

Nonferrous

Nonferrous metals include a great many metals that are used mainly for metal plating or as alloying elements, such as tin, zinc, silver, and gold. However, this chapter will focus only on the metals used in the manufacture of parts, such as aluminum, magnesium, titanium, nickel, copper, and tin alloys.

PROPERTIES OF METALS

GENERAL

The internal reactions of a metal to external forces are known as mechanical properties. The mechanical properties are directly related to each other. A change in one property usually causes a change in one or more additional properties. For example, if the hardness of a metal is increased, the brittleness usually increases and the toughness usually decreases. Following is a brief explanation of the mechanical properties and how they relate to each other.

TENSILE STRENGTH

Tensile strength is the ability of a metal to resist being pulled apart by opposing forces acting in a straight line (Figure 2-1). It is expressed as the number of pounds of force required to pull apart a bar of the material 1 inch wide and 1 inch thick.

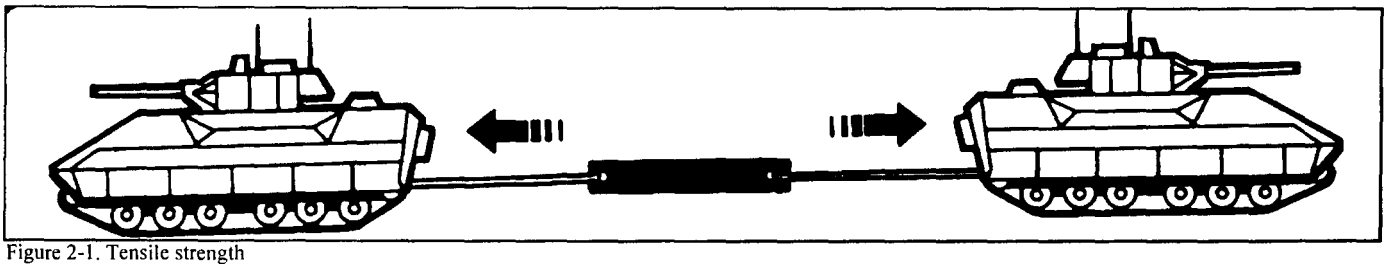

Figure 2-1. Tensile strength

SHEAR STRENGTH

Shear strength is the ability of a metal to resist being fractured by opposing forces not acting in a straight line (Figure 2-2). Shear strength can be controlled by varying the hardness of the metal.

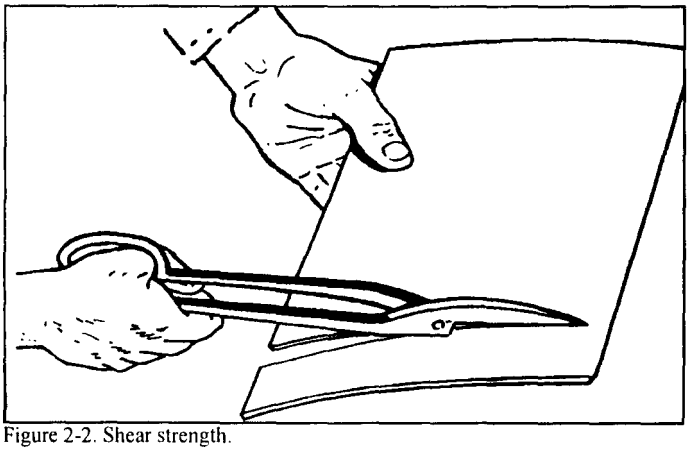

Figure 2-2. Shear strength.

COMPRESSIVE STRENGTH

Compressive strength is the ability of a metal to withstand pressures acting on a given plane (Figure 2-3).

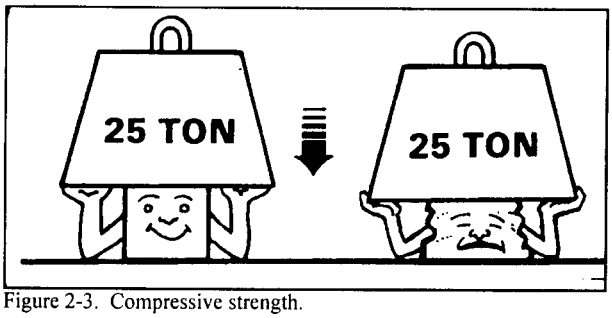

Figure 2-3. Compressive strength.

ELASTICITY

Elasticity is the ability of metal to return to its original size and shape after being stretched or pulled out of shape (Figure 2-4).

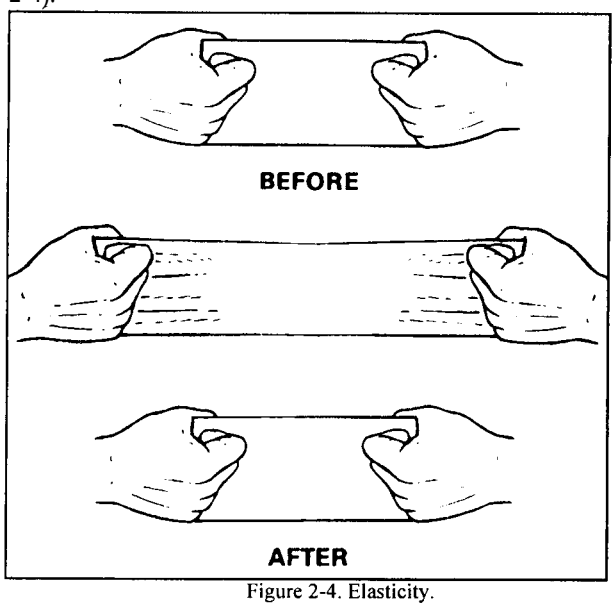

Figure 2-4. Elasticity.

DUCTILITY

Ductility is the ability of a metal to be drawn or stretched permanently without rupture or fracture (Figure 2-5). Metals that lack ductility will crack or break before bending.

MALLEABILITY

Malleability is the ability of a metal to be hammered, rolled, or pressed into various shapes without rupture or fracture (Figure 2-6).

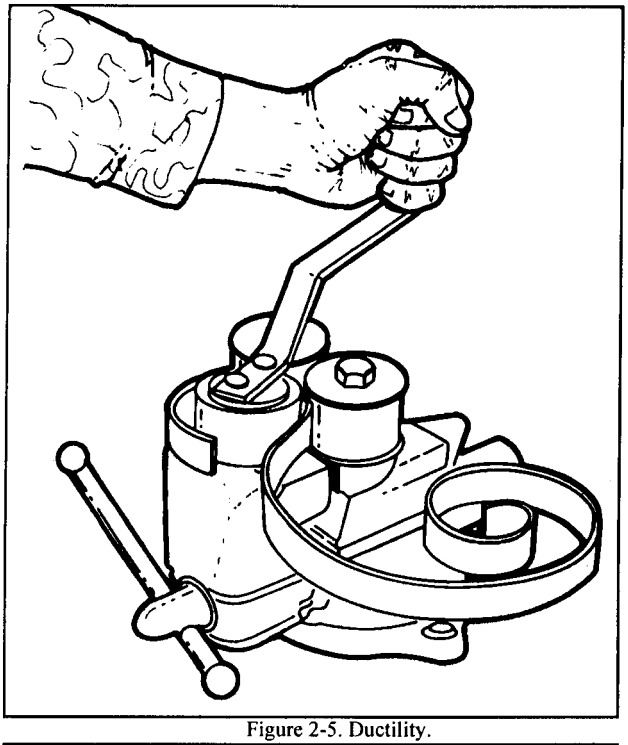

Figure 2-5. Ductility.

Figure 2-6. Malleability.

TOUGHNESS

Toughness is the ability of a metal to resist fracture plus the ability to resist failure after the damage has begun. A tough metal can withstand considerable stress, slowly or suddenly applied, and will deform before failure.

HARDNESS

Hardness is the ability of a metal to resist penetration and wear by another metal or material. It takes a combination of hardness and toughness to withstand heavy pounding. The hardness of a metal limits the ease with which it can be machined, since toughness decreases as hardness increases. The hardness of a metal can usually be controlled by heat treatment.

MACHINABILITY AND WELDABILITY

Machinability and weldability are the ease or difficulty with which a material can be machined or welded.

CORROSION RESISTANCE

Corrosion resistance is the resistance to eating or wearing away by air, moisture, or other agents.

HEAT AND ELECTRICAL CONDUCTIVITY

Heat and electrical conductivity is the ease with which a metal conducts or transfers heat or electricity.

BRITTLENESS

Brittleness is the tendency of a material to fracture or break with little or no deformation, bending, or twisting. Brittleness is usually not a desirable mechanical property. Normally, the harder the metal, the more brittle it is.

IDENTIFICATION OF METALS

GENERAL

Part of the metalworker's skill lies in the ability to identify various metal products brought to the shop. The metalworker must be able to identify the metal so the proper work methods can be applied. For Army equipment, drawings should be available. They must be examined in order to determine the metal to be used and its heat treatment (if required). If no drawing is available, knowledge of what the parts are going to do will serve as a guide to the type of metal to use.

TESTING OF METALS

Simple tests can be made in the shop to identify metals. Since the ability to judge metals can be developed only through personal experience, practice these tests with known metals until familiar with the reactions of each metal to each type of test.

Appearance Test

This test includes such things as the color and appearance of machined as well as unmachined surfaces.

Fracture Test

Some metals can be quickly identified by looking at the surface of the broken part or by studying the chips produced with a hammer and chisel.

Spark Test

This is a simple identification test used to observe the color, spacing, and quantity of sparks produced by grinding. It is a fast and convenient method of sorting mixed steels with known spark characteristics. This test is best conducted by holding the steel stationary and touching a high-speed portable grinder to the steel with sufficient pressure to throw a spark stream about 12 inches long. The characteristics of sparks generated by a spark grinding test are shown in Figure 2-7. These spark patterns provide general information about the type of steel, cast iron, or alloy steel. In all cases, it is best to use standard samples of metal when comparing their sparks with that of the test sample.

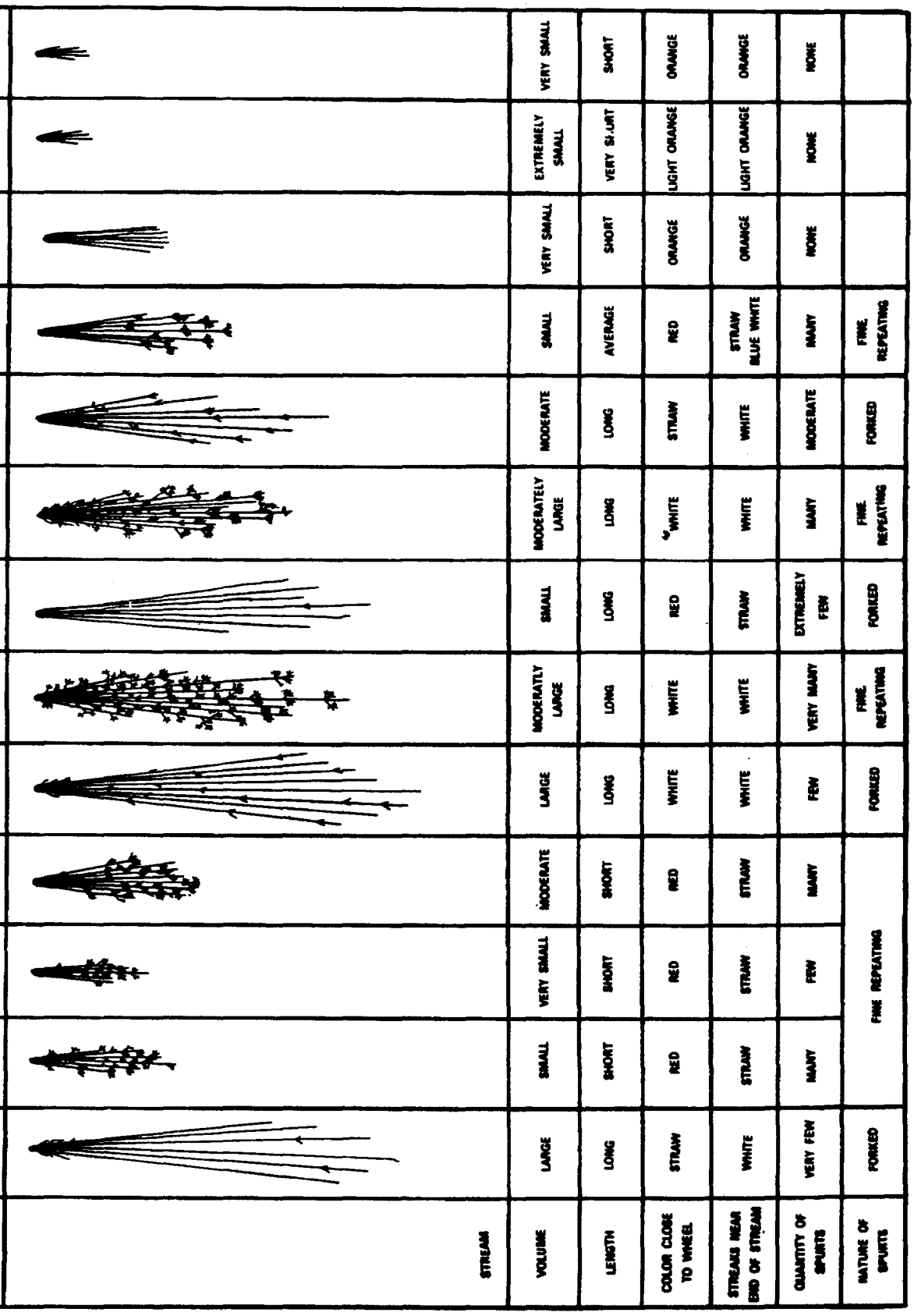

	WROUGHT IRON	GRAY CAST IRON	WHITE CAST IRON	ANNEALED MALLEABLE IRON	MACHINE STEEL (AISI 1020)	CARBON TOOL STEEL	HIGH SPEED STEEL (18-4-1)	AUSTENITIC MANGANESES STEEL	STAINLESS STEEL (TYPE 410)	TUNGSTEN CHROMIUM DIE STEEL	STELLITE	CEMENTED TUNGSTEN CARBIDE	NICKEL
STREAM													
VOLUME	LARGE	SMALL	VERY SMALL	MODERATE	LARGE	MODERATELY LARGE	SMALL	MODERATELY LARGE	MODERATE	SMALL	VERY SMALL	EXTREMELY SMALL	VERY SMALL
LENGTH	LONG	SHORT	SHORT	SHORT	LONG	LONG	LONG	LONG	LONG	AVERAGE	SHORT	VERY SHORT	SHORT
COLOR CLOSE TO WHEEL	STRAW	RED	RED	RED	WHITE	WHITE	RED	WHITE	STRAW	RED	ORANGE	LIGHT ORANGE	ORANGE
STREAKS NEAR END OF STREAM	WHITE	STRAW	STRAW	STRAW	WHITE	WHITE	STRAW	WHITE	WHITE	STRAW BLUE WHITE	ORANGE	LIGHT ORANGE	ORANGE
QUANTITY OF SPURTS	VERY FEW	MANY	FEW	MANY	FEW	VERY MANY	EXTREMELY FEW	MANY	MODERATE	MANY	NONE	NONE	NONE
NATURE OF SPURTS	FORKED	FINE REPEATING			FORKED	FINE REPEATING	FORKED	FINE REPEATING	FORKED	FINE REPEATING			

Figure 2-7. Spark test.

THE ROCKWELL HARDNESS NUMBER IS DETERMINED BY THE DEPTH OF THE IMPRESSION WHILE THE BRINELL HARDNESS NUMBER IS DETERMINED BY THE AREA OF THE IMPRESSION

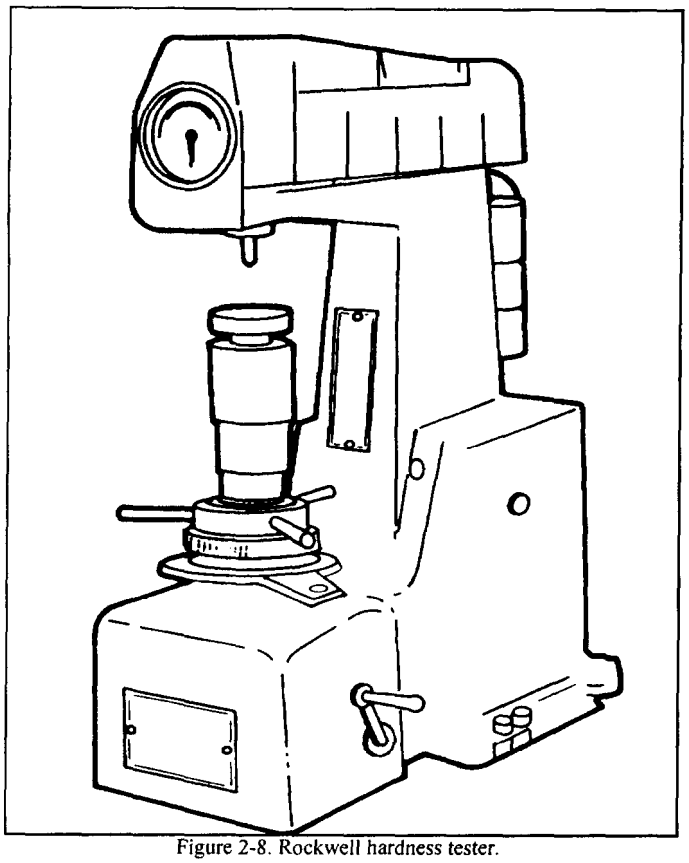

Figure 2-8. Rockwell hardness tester.

File Test

One simple way to check for hardness in a piece of metal is to file a small portion of it. If it is soft enough to be machined with regular tooling, the file will cut it. If it is too hard to machine, the file will not cut it. This method will indicate whether the material being tested is softer or harder than the file, but it will not tell exactly how soft or hard it is. The file can also be used to determine the harder of two pieces of metal; the file will cut the softer metal faster and easier. The file method should only be used in situations when the exact hardness is not required. This test has the added advantage of needing very little in the way of time, equipment, and experience.

Rockwell Hardness Test

This test determines the hardness of metals by measuring the depth of impression which can be made by a hard test point under a known load. The softer the metal, the deeper the impression. Soft metals will be indicated by low hardness numbers. Harder metals permit less of an impression to be made, resulting in higher hardness numbers. Rockwell hardness testing is accomplished by using the Rockwell hardness testing machine (Figure 2-8).

Brinell Hardness Fest

Brinell hardness testing operates on almost the same principle as the Rockwell test. The difference between the two is that the Rockwell hardness number is determined by the depth of the impression while the Brinell hardness number is determined by the area of the impression. This test forces a hardened ball, 10 mm (0.3937 *in)* in diameter, into the surface of the metal being tested, under a load of 3,000 kilograms (approximately 6,600 lb). The area of this impression determines the Brinell hardness number of the metal being tested. Softer metals result in larger impressions but have lower hardness numbers.

NUMERICAL CODES

Perhaps the best known numerical code is the Society of Automotive Engineers (SAE) code. For the metals industry, this organization pioneered in developing a uniform code based on chemical analysis. SAE specification numbers are now used less widely than in the past; however, the SAE numerical code is the basic code for ferrous metals Figure 2-9).

The SAE system is based on the use of four-or five digit numbers.

- The first number indicates the type of alloy used; for example, 1 indicates a carbon steel.
- Two indicates nickel steel.
- The second, and sometimes the third, number gives the amount of the main alloy in whole percentage numbers.
- The last two, and sometimes three, numbers give the carbon content in hundredths of 1 percent (0.01 percent).

The following examples will help you understand this system:

SAE 1045

1- Type of steel (carbon).

0- Percent of alloy (none).

45- Carbon content (0.45-percent carbon).

TYPES OF STEEL	SAE NUMBERS
CARBON STEELS	1XXX
Plain Carbon	10XX
Free Cutting, Manganese	X13XX
Free Cutting, Screw Stock	11XX
HIGH MANGANESE	T13XX
NICKEL STEELS	2XXX
.50% Nickel	20XX
1.50% Nickel	21XX
3.50% Nickel	23XX
5.00% Nickel	25XX
NICKEL-CHROMIUM STEELS	3XXX
1.25% Nickel : .60% Chromium	31XX
1.75% Nickel : 1.00% Chromium	32XX
3.50% Nickel : 1.50% Chromium	33XX
3.00% Nickel : .80% Chromium	34XX
Corrosion and Heat Resisting	30XXX
MOLYBDENUM STEELS	4XXX
Chromium-Molybdenum	41XX
Chromium-Nickel-Molybdenum	43XX
Nickel-Molybdenum	46XX & 48XX
CHROMIUM STEELS	5XXX
.60% to 1.10% Chromium	51XX
1.2% to 1.5% Chromium	52XXX
Corrision and Heat Resistant	51XXX
Chromium-Vanadium Steels	6XXX
Tungsten Steels	7XXXX & 7XXX
Silcon-Manganese Steels	9XXX

Figure 2-9. SAE numerical code.

SAE 2330

2- Type of steel (nickel).

3- Percent of alloy (3-percent nickel).

30- Carbon content (0.30-percent carbon).

SAE 71650

7- Type of steel (tungsten).

16- Percent of alloy (16-percent tungsten).

50- Carbon content (0,50-percent carbon).

SAE 50100

5- Type of steel (chromium).

0- Percent of alloy (less than l-percent chromium).

100- Carbon content (1-percent carbon).

AA Code

A system similar to the SAE classifications for steel and alloys has been developed by the Aluminum Association (AA) for wrought aluminum and aluminum alloys.

This identification system of aluminum, as shown in Figure 2-10, consists of a four-digit number which indicates the type of alloy. control over impurities, and the specific alloy. The first number indicates the type of alloy. For example, 2 is copper, 3 is manganese, 4 is silicone, and so forth. The second number indicates the control that has been used. The last two numbers usually indicate an assigned composition. Thus, AA-2024 means:

2 - Type of alloy (copper).

O - Control of impurities.

24 - Exact composition (AA number 24).

Aluminum alloys vary greatly in their hardness and physical condition. These differences are called "temper," Letter symbols represent the different tempers, In addition to a letter, one or more numbers are sometimes used to indicate further differences. The temper designation is separated from the basic four-digit identification number by a dash; for example, 2024-T6. In this case there is an aluminum alloy, 2024, with a T6 temper (solution heat treated and then artificially aged). Figure 2-11 shows the numerals 2 through 10 that have been assigned in the AA system to indicate specific sequences of annealing, heat treating, cold working, or aging.

MAJOR ALLOYING ELEMENTS

ALUMINUM AT LEAST 99% PURE	1XXX
COPPER	2XXX
MANGANESE	3XXX
SILICON	4XXX
MAGNESIUM	5XXX
MAGNESIUM AND SILICON	6XXX
ZINC	7XXX
OTHER ELEMENTS	8XXX
UNUSED SERIES	9XXX

Figure 2-10. Aluminum alloy groups.

METHODS OF MARKING

Stenciling

A stencil and white or black paint, whichever shows up better on the metal being marked, should be used when the size of the metal piece permits. The federal or military specification numbers should be stenciled on the metal in vertically or hoizontally aligned rows. The distance between the vertical rows should not exceed 36 inches, and the distance between the horizontal rows should not exceed 10 inches.

Stamping

Stamping the specification number into the metal should be used when it is impossible to use the stencil method. It is usually necessary to cut or eliminate the marked portion of the metal prior to using the material for work stock. Therefore, the marking should be located where waste will be held to a minimum. Gothic style numerals and letters should be used; the height may be 1/16 inch, 1/8 inch, or 1/4 inch, depending upon the size of the material being marked.

GENERAL

TEMPER DESIGNATION	
Symbol	**Designation**
—F	As fabricated.
—O	Annealed, recrystallized (wrought products only).
—H	Strain hardened.
—H1	Plus one or more digits. Strain hardened only.
—H2	Plus one or more digits. Strain hardened and then partially annealed.
—H3	Plus one or more digits. Strain hardened and stabilized.
—W	Solution heat treated—unstable temper. This designation is specified only when the period of natural aging is indicated.
—T	Treated to produce stable tempers other than —F, —O, or —H.
—T2	Annealed (cast products only).
—T3	Solution heat-treated and then cold worked.
—T4	Solution heat-treated.
—T5	Artificially aged only.
—T6	Solution heat-treated and then artifically aged.
—T7	Solution heat-treated and then stabilized.
—T8	Solution heat-treated cold-worked and then artifically aged.
—T9	Solution heat-treated, artificially aged and then cold-worked.
—T10	Artifically-aged and then cold worked.

Figure 2-11. Temper designation of aluminum.

FERROUS METALS

Ferrous metals are those that contain iron as the base metal. The properties of ferrous metals may be changed by adding various alloying elements. The chemical and mechanical properties need to be combined to produce a metal to serve a specific purpose. The basic ferrous metal form is pig iron. Pig iron is produced in a blast furnace that is charged with an iron ore, coke, and limestone. The four principal iron ores are hematite, limonite, magnetite and faconite.

CAST IRON

Cast iron is a metal that is widely used. It is a hard, brittle metal that has good wear resistance. Cast iron contains 2 to 4 percent carbon. White cast iron is very hard and is used mostly where abrasion and wear resistance is required. White cast iron may be made into malleable iron by heating it; then cooling it very slowly over a long period of time. Malleable iron is stronger and tougher than white cast iron; however, it is much more expensive to produce. Gray iron is another form of cast iron. It is used mostly for castings because of its ability to flow easily into complex shapes.

WROUGHT IRON

Wrought iron is an iron that has had most of its carbon removed. It is tough; however, it can be bent or twisted very easily. Wrought iron is used mostly in ornamental ironwork, such as fences and handrails, because it is welded or painted easily and it rusts very slowly.

STEEL

Steel is an alloy of iron and carbon or other alloying elements. When the alloying element is carbon, the steel is referred to as carbon steel. Carbon steels are classified by the percentage of carbon in "points" or hundredths of 1 percent they contain.

Low Carbon Steel

(Carbon content up to 0.30 percent or 30 points).

This steel is soft and ductile and can be rolled, punched, sheared, and worked when either hot or cold. It is easily machined and can be readily welded by all methods. It does not harden to any great amount; however, it can be easily case- or surface-hardened.

Medium Carbon Steel

(Carbon content from 0.30 to 0.50 percent or 30 to 50 points).

This steel may be heat-treated after fabrication. It is used for general machining and forging of parts that require surface hardness and strength. It is made in bar form in the cold-rolled or the normalized and annealed condition. During welding, the weld zone will become hardened if cooled rapidly and must be stress-relieved after welding.

High Carbon Steel

(Carbon content from 0.50 to 1.05% or 50 to 105 points)

This steel is used in the manufacture of drills, taps, dies, springs, and other machine tools and hand tools that are heat-treated after fabrication to develop the hard structure necessary to withstand high shear stress and wear. It is manufactured in bar, sheet, and wire forms, and in the annealed or normalized condition in order to be suitable for machining before heat treatment. This steel is difficult to weld because of the hardening effect of heat at the welding joint.

Tool Steel

(carbon content from 0.90 to 1.70 percent or 90 to 170 points)

This steel is used in the manufacture of chisels, shear blades, cutters, large taps, woodturning tools, blacksmith's tools, razors, and other similar parts where high hardness is required to maintain a sharp cutting edge. It is difficult to weld due to the high carbon content.

High-Speed Steel

High-speed steel is a self-hardening steel alloy that can withstand high temperatures without becoming soft. High-speed steel is ideal for cutting tools because of its ability to take deeper cuts at higher speeds than tools made from carbon steel.

Tungsten Carbide

Tungsten carbide is the hardest man-made metal. It is almost as hard as a diamond. The metal is molded from tungsten and carbon powders under heat and pressure. Tools made from this metal can cut other metals many times faster than high-speed steel tools.

Alloy Steels

Steel is manufactured to meet a wide variety of specifications for hardness, toughness, machinability, and so forth. Manufacturers use various alloying elements to obtain these characteristics. When elements other than carbon, such as chromium, manganese, molybdenum, nickel, tungsten, and vanadium are used. The resulting metals are called alloy steels. Figure 2-12 shows some of the general characteristics obtained by the use of various alloying elements.

NONFERROUS METALS

There are many metals that do not have iron as their base metal. These metals, known as nonferrous metals, offer specific properties or combinations of properties that make them ideal for tasks where ferrous metals are not suitable. Nonferrous metals are often used with iron base metals in the finished product.

ALUMINUM

Aluminum and its alloys are produced and used in many shapes and forms. The common forms are castings, sheet, plate, bar, rod, channels, and forgings. Aluminum alloys have many desirable qualities. They are lighter than most other metals and do not rust or corrode under most conditions. Aluminum can be cast-forged, machined, and welded easily.

MAGNESIUM

Magnesium alloys are produced and used in many shapes and forms, for example, castings, bars, rods, tubing, sheets and plates, and forgings. Their inherent strength, light weight, and shock and vibration resistance are factors which make their use advantageous. The weight for an equal volume of magnesium is approximately two-thirds of that for aluminum and one-fifth of that for steel. Magnesium has excellent machining qualities; however, care must be taken when machining because the chips are highly flammable. Magnesium fires bum so hot that they cannot be extinguished by conventional fire extinguishers.

COPPER

Copper is a reddish metal, very ductile and malleable, and has high electrical and heat conductivity. Copper can be forged, cast, and cold worked. It also can be welded, but its machinability is only fair. The principal use of commercially pure copper is in the electrical industry where it is made into wire or other such conductors. It is also used in the manufacture of nonferrous alloys such as brass, bronze, and monel metal. Typical copper products are sheet roofing, cartridge cases, bushings, wire, bearings, and statues.

BRASS AND BRONZE

Brass, an alloy of copper and zinc (60 to 68 percent copper and 32 to 40 percent zinc), has a low melting point and high heat conductivity. There are several types of brass such as naval, red, admiralty, yellow, and commercial. All differ in copper and zinc content. All may be alloyed with other elements such as lead, tin, manganese, or iron, and all have good machinability and can be welded. Bronze is an alloy of copper and tin and may contain lead, zinc, nickel, manganese, or phosphorous. It has high strength, is rust or corrosion resistant, has good machinability, and can be welded.

TYPES OF STEEL	SAE NUMBERS (GENERAL SERIES)	CHARACTERISTICS RESULTING FROM THE ALLOYING ELEMENTS ADDED
CARBON STEELS	1000	Surface Hardness and Strength
NICKEL STEELS	2000	Toughness
CHROME-NICKEL STEELS	3000	Toughness and Depth Hardness
MOLYBDENUM STEELS	4000	Eliminates Brittleness and Increases Depth Hardness
CHROME-MOLYBDENUM STEELS	4100	High Strength and Toughness
CHROMIUM STEELS	5000	Corrosion Resistance and Hardness
CHROME-VANADIUM	6000	Depth Hardness and toughness at Sub-zero Temperature
TUNGSTEN STEELS	7000	Hardness at High Temperatures
CHROME-NICKEL-MOLYBDENUM STEELS	8000	Toughness and Strength (General Purpose Steel)
SILICONE-MANGANESE STEELS	9000	Depth Hardness and Toughness Under Impact

Figure 2-12. General characteristics of common alloys.

LEAD

Lead is used mainly in the manufacture of electrical equipment such as lead-coated power and telephone cables and storage batteries. Zinc alloys are used in the manufacture of lead weights, bearings, gaskets, seals, bullets, and shot. Many types of chemical compounds are produced from lead. Among these are lead carbonate (paint pigment) and tetraethyl lead (antiknock gasoline). Lead is also used for X-ray protection (radiation shields). Lead has more fields of application than any other metal. It can be cast, cold worked, welded, and machined. Lead has low strength with heavy weight.

TIN

The major use of tin is in coating steel. It is the best container for preserving perishable food. Tin, in the form of foil, is often used in wrapping food products. A second major use of tin is as an alloying element. Tin is alloyed with copper to produce bronze, with lead to produce solder, and with antimony and lead to form babbitt. Tin can be die cast, cold worked, machined, and soldered; however, it cannot be welded.

NICKEL

Nickel is used in making alloys of both ferrous and nonferrous metals. Chemical and food processing equipment, electrical resistance heating elements, ornamental trim, and parts that must withstand elevated temperatures are all produced from nickel containing metal. Alloyed with chromium, it is used to make stainless steel. Nickel alloys are readily welded by either gas or arc methods and can be machined, forged, cast, and easily formed.

COBALT-CHROMIUM-TUNGSTEN MOLYBDENUM WEAR-RESISTANT ALLOYS

These alloys feature a wear resistance which makes them ideal for metal-cutting operations. Their ability to retain hardness even at red-heat temperatures also makes them especially useful for cutting tools. Common cutting tools will lose their edge at high heat, whereas this alloy group is actually tougher at red heat than it is when cold; as a result, higher speeds and feeds may be used when machining with tools made with these alloys.

PRECIOUS METALS

These include silver, gold, platinum, palladium, iridium, osmium, rhodium, and ruthenium, and their alloys. These alloys are produced under technical and legal requirements. Gold alloys used for jewelry are described in karats. The karat is the content of gold expressed in twenty-fourths. An 18-karat gold alloy would contain 18/24 gold (75 percent by weight). Other than jewelry, there are many industrial uses for precious metals.

HEAT TREATMENT OF METALS

Heat treatment is any one of a number of controlled heating and cooling operations used to bring about a desired change in the physical properties of a metal. Its purpose is to improve the structural and physical properties for some particular use or for future work of the metal. There are five basic heat treating processes: hardening, case hardening, annealing, normalizing, and tempering. Although each of these processes bring about different results in metal, all of them involve three basic steps: heating, soaking, and cooling.

HEATING

Heating is the first step in a heat-treating process. Many alloys change structure when they are heated to specific temperatures. The structure of an alloy at room temperature can be either a mechanical mixture, a solid solution, or a combination solid solution and mechanical mixture.

A mechanical mixture can be compared to concrete. Just as the.sand and gravel are visible and held in place by the cement. The elements and compounds in a mechanical mixture are clearly visible and are held together by a matrix of base metal. A solid solution is when two or more metals are absorbed, one into the other, and form a solution. When an alloy is in the form of a solid solution, the elements and compounds forming the metal are absorbed into each other in much the same way that salt is dissolved in a glass of water. The separate elements forming the metal cannot be identified even under a microscope. A metal in the form of a mechanical mixture at room temperature often goes into a solid solution or a partial solution when it is heated. Changing the chemical composition in this way brings about certain predictable changes in grain size and structure. This leads to the second step in the heat treating process: soaking.

SOAKING

Once a metal part has been heated to the temperature at which desired changes in its structure will take place, it must remain at that temperature until the entire part has been evenly heated throughout. This is known as soaking. The more mass the part has, the longer it must be soaked.

COOLING

After the part has been properly soaked, the third step is to cool it. Here again, the structure may change from one chemical composition to another, it may stay the same, or it may revert to its original form. For example, a metal that is a solid solution after heating may stay the same during cooling, change to a mechanical mixture, or change to a combination of the two, depending on the type of metal and the rate of cooling. All of these changes are predictable. For that reason, many metals can be made to conform to specific structures in order to increase their hardness, toughness, ductility, tensile strength, and so forth.

HEAT TREATMENT OF FERROUS METALS

All heat-treating operations involve the heating and cooling of metals, The common forms of heat treatment for ferrous metals are hardening, tempering, annealing, normalizing, and case hardening.

HARDENING

A ferrous metal is normally hardened by heating the metal to the required temperature and then cooling it rapidly by plunging the hot metal into a quenching medium, such as oil, water, or brine. Most steels must be cooled rapidly to harden them. The hardening process increases the hardness and strength of metal, but also increases its brittleness.

TEMPERING

Steel is usually harder than necessary and too brittle for practical use after being hardened. Severe internal stresses are set up during the rapid cooling of the metal. Steel is tempered after being hardened to relieve the internal stresses and reduce its brittleness. Tempering consists of heating the metal to a specified temperature and then permitting the metal to cool. The rate of cooling usually has no effect on the metal structure during tempering. Therefore, the metal is usually permitted to cool in still air. Temperatures used for tempering are normally much lower than the hardening temperatures. The higher the tempering temperature used, the softer the metal becomes. High-speed steel is one of the few metals that becomes harder instead of softer after it is tempered.

ANNEALING

Metals are annealed to relieve internal stresses, soften them, make them more ductile, and refine their grain structures. Metal is annealed by heating it to a prescribed temperature, holding it at that temperature for the required time, and then cooling it back to room temperature. The rate at which metal is cooled from the annealing temperature varies greatly. Steel must be cooled very slowly to produce maximum softness, This can be done by burying the hot part in sand, ashes, or some other substance that does not conduct heat readily (packing), or by shutting off the furnace and allowing the furnace and part to cool together (furnace cooling).

NORMALIZING

Ferrous metals are normalized to relieve the internal stresses produced by machining, forging, or welding. Normalized steels are harder and stronger than annealed steels. Steel is much tougher in the normalized condition than in any other condition. Parts that will be subjected to impact and parts that require maximum toughness and resistance to external stresses are usually normalized. Normalizing prior to hardening is beneficial in obtaining the desired hardness, provided the hardening operation is performed correctly. Low carbon steels do not usually require normalizing, but no harmful effects result if these steels are normalized. Normalizing is achieved by heating the metal to a specified temperature (which is higher than either the hardening or annealing temperatures), soaking the metal until it is uniformly heated, and cooling it in still air.

CASE HARDENING

Case hardening is an ideal heat treatment for parts which require a wear-resistant surface and a tough core, such as gears, cams, cylinder sleeves, and so forth. The most common case-hardening processes are carburizing and nitriding. During the case-hardening process, a low-carbon steel (either straight carbon steel or low-carbon alloy steel) is heated to a specific temperature in the presence of a material (solid, liquid, or gas) which decomposes and deposits more carbon into the surface of a steel. Then, when the part is cooled rapidly, the outer surface or case becomes hard, leaving the, inside of the piece soft but very tough.

HEAT TREATMENT OF NONFERROUS METALS

Two types of heat-treating operations can be performed on nonferrous metals. They are annealing and solution heat treating.

ANNEALING

Most nonferrous metals can be annealed. The annealing process consists of heating the metal to a specific temperature, soaking, and cooling to room temperature. The temperature and method of cooling depend on the type of metal. Annealing is often accomplished after various cold working operations because many nonferrous metals become hard and brittle after cold working. Also, annealing is used to remove the effects of solution heat treatment so that machining or working qualities can be improved.

SOLUTION HEAT TREATMENT

The tensile strength of many nonferrous alloys can be increased by causing the materials within the alloy to go into a solid solution and then controlling the rate and extent of return to an altered mechanical mixture. This operation is called solution heat treatment. After an alloy has been heated to a specified temperature, it is "quenched" or cooled rapidly, which traps the materials in the solid solution attained during the heating process. From this point, the process varies greatly depending on the metal. To be sure the materials in the alloy do not revert to their original configuration after a period of time, a process of aging or precipitation hardening must follow. In this process the materials in the alloy are allowed to change or to precipitate out of the solid solution.

This process occurs under controlled conditions so that the resultant grain structure will produce a greater tensile strength in the metal than in its original condition. Depending on the alloy, this precipitation process can also consist of simply aging the alloy at room temperature for a specified time and then air-cooling it; this is called artificial aging.

Aluminum alloys can be obtained in various conditions of heat treatment called temper designations. Figure 2-11, on page 2-9, shows the various temper designations and the process to which they apply. The term "strain-hardened" refers to aging or hardening that has been brought about by coldworking the alloy. "Stabilizing" refers to a particular aging process that freezes or stops the internal changes that normally would take place in the alloy at room temperature. Magnesium alloys can be subjected to all of the nonferrous heat treatments, but the different alloys within the series require different temperatures and times for the various processes. Copper alloys are generally hardened by annealing. The nickel alloys can also be annealed and certain types can be hardened by heat treatment. Likewise, titanium may be annealed (mostly relieve machining or cold-working stresses) but is not noticeably affected by heat treatment.

Chapter 3

PORTABLE MACHINE TOOLS

The portable machine tools identified and described in this chapter are intended for use by maintenance personnel in a shop or field environment. These lightweight, transportable machine tools, can quickly and easily be moved to the workplace to accomplish machining operations. The accuracy of work performed by portable machine tools is dependent upon the user's skill and experience.

Portable machine tools are powered by self-contained electric motors or compressed air (pneumatic) from an outside source. They are classified as either cutting took (straight and angle hand drills, metal sawing machines, and metal cutting shears) or finishing tools (sanders, grinders, and polishers).

SAFETY PRECAUTIONS

GENERAL

Portable machine tools require special safety precautions while being used. These are in addition to those safety precautions described in Chapter 1.

PNEUMATIC AND ELECTRIC TOOL SAFETY

Here are some safety precautions to follow:

- Never use electric equipment (such as drills, sanders, and saws) in wet or damp conditions.
- Properly ground all electric tools prior to use.
- Do not use electric tools near flammable liquids or gases.
- Inspect all pneumatic hose lines and connections prior to use.
- Keep constant watch on air pressure to stay within specified limits.
- Keep all equipment in proper working order, and use the equipment according to the manufacturer's instructions.
- Remove chuck keys from drills prior to use.
- Hold tools firmly and maintain good balance.
- Secure the work in a holding device, not in your hands.
- Wear eye protection while operating these machines.
- Ensure that all lock buttons or switches are off before plugging the machine tool into the power source.
- Never leave a portable pneumatic hammer with a chisel, star drill, rivet set, or other tool in its nozzle.

ELECTRIC EXTENSION CORDS

Use the right wire gage for the length of the cord. As the length of the extension cord increases, heavier gage wire must be used. Lengthening extension cords by connecting several small gage cords together causes a serious drop in voltage. This results in the cord overheating. Extension cords that overheat will bum away the insulation, creating a potential electric shock hazard and fire hazard. See Table 3-1, Appendix A, for proper gage and length of extension cords.

PORTABLE DRILLS

PURPOSE AND TYPES

The portable drill is a hand-supported, power-driven machine tool that rotates twist drills, reamers, counterbores, and similar cutting tools. The portable drill may be electrically powered by means of an internal electric motor (Figure 3-1) or may be pneumatically powered (Figure 3-2). Portable drills are rated by the maximum size hole that can be drilled in steel without overtaxing the motor or drill.

Therefore, a 1/4-inch-capacity drill is capable of drilling a 1/4-inch diameter hole or smaller in steel. Portable electric and pneumatic drills rated at 1/4 to 1/2-inch maximum capacities are usually equipped with geared drill chucks for mounting straight, round shank twist drills or other similar tools by using a chuck key (Figure 3-3). Heavier portable drills (Figure 3-4) having a 3/4- to 1 1/4-inch capacity use taper shank chucks to mount drills and other similar tools.

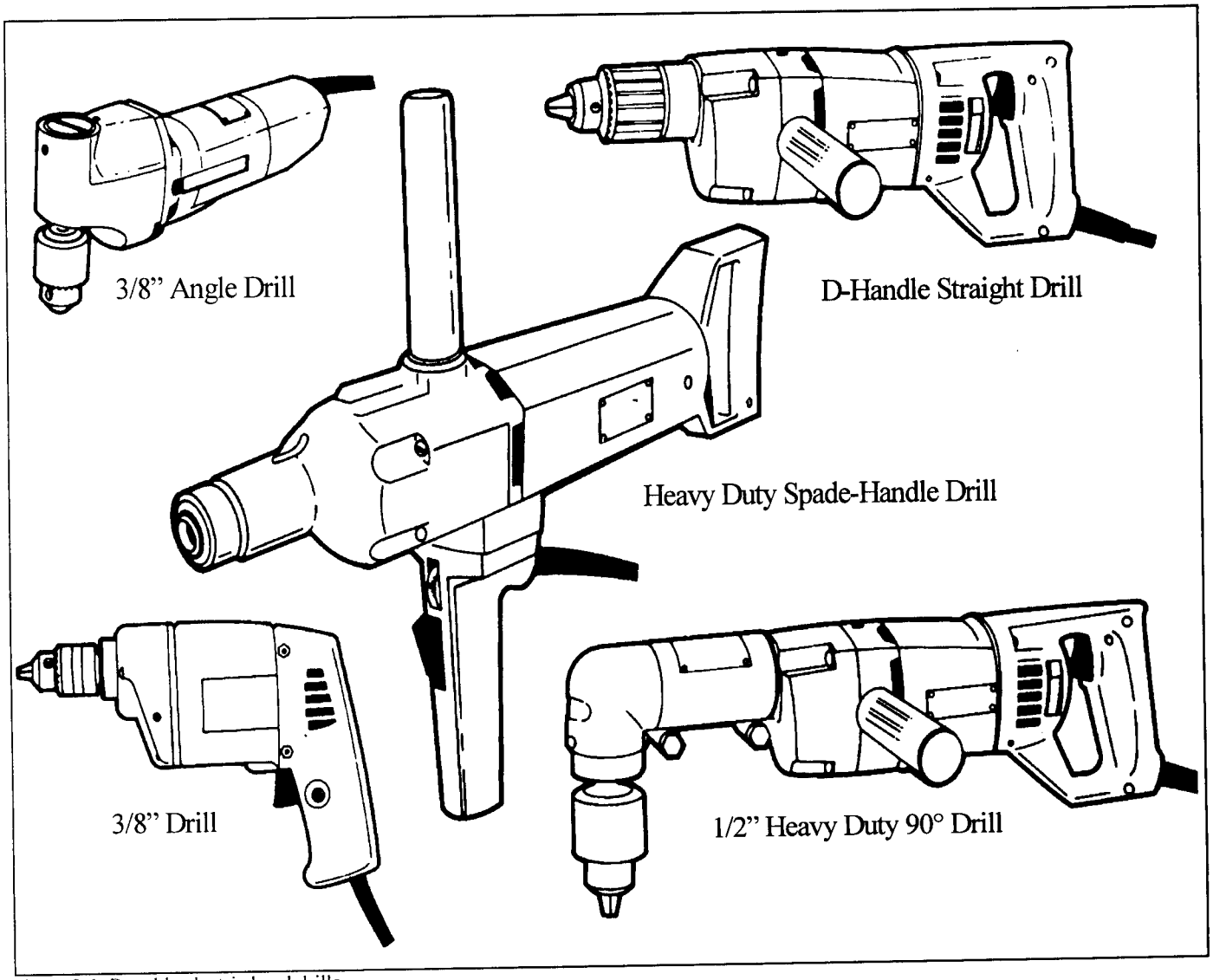

Figure 3-1. Portable electric hand drills.

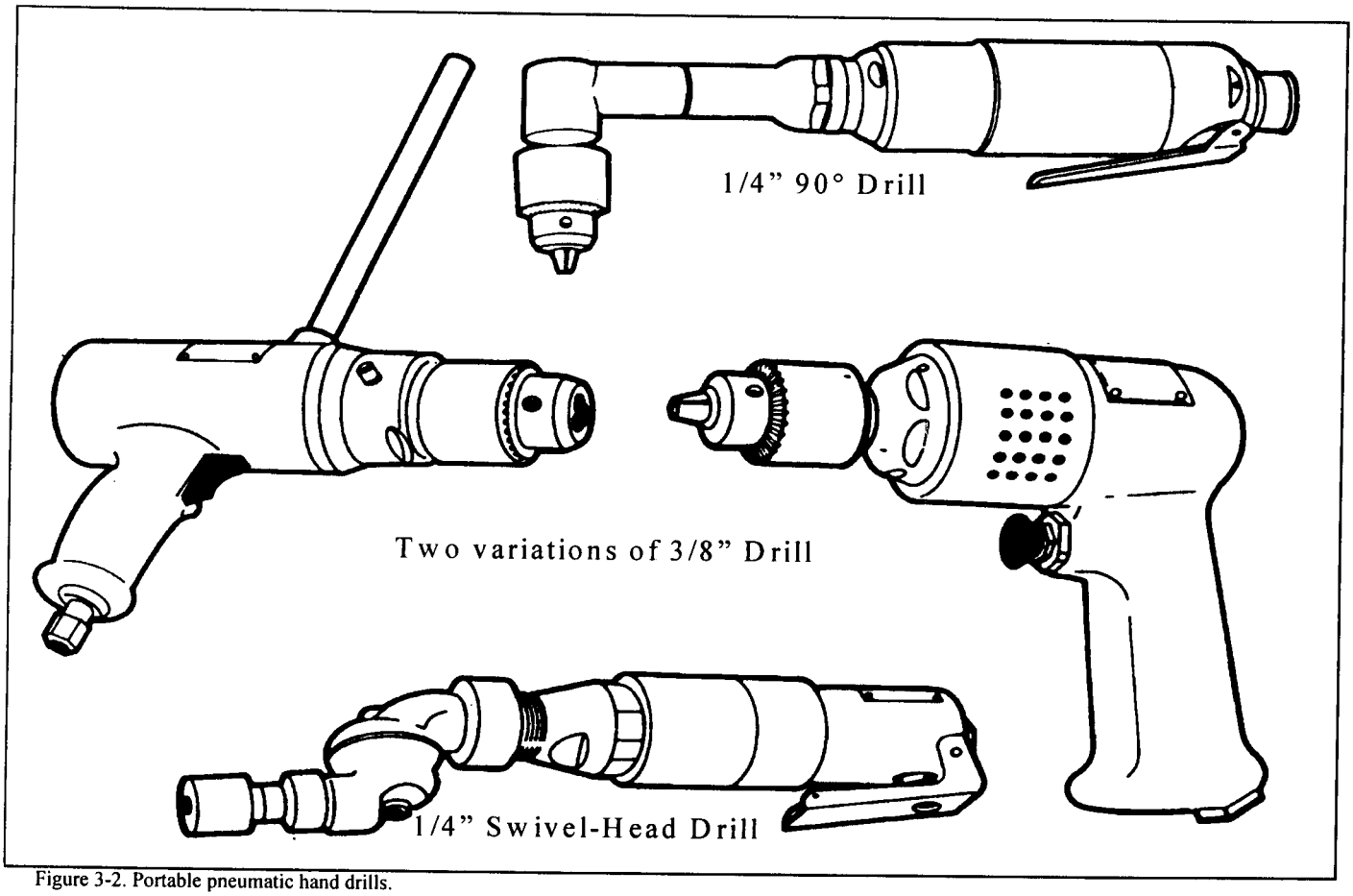

Figure 3-2. Portable pneumatic hand drills.

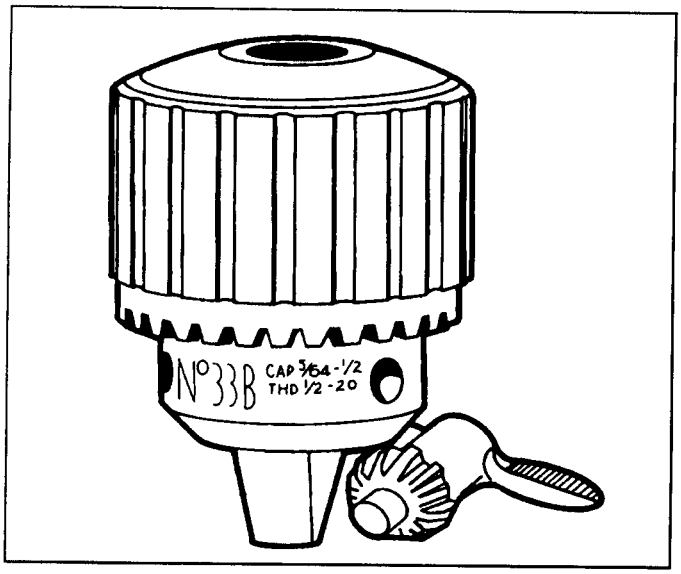

Figure 3-3. Geared drill chuck and chuck key.

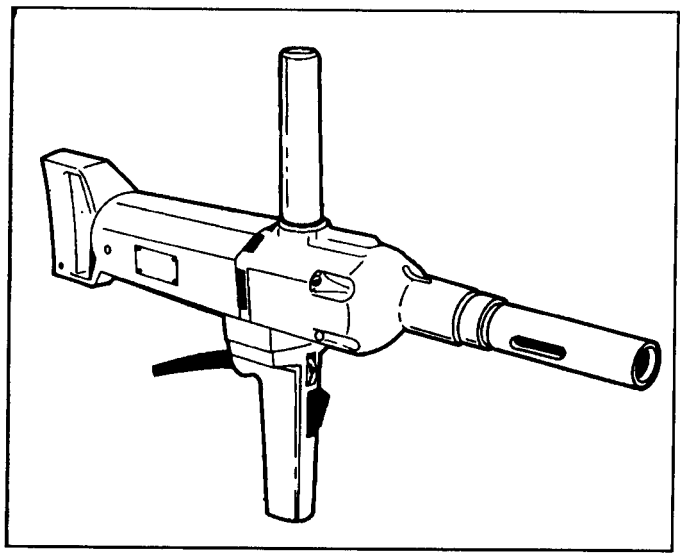

Figure 3-4. 1-inch capacity portable electric drill.

Portable drills have many different characteristics (Figure 3-5) depending on how the job is to be done. They may be set for one speed or they maybe variable speed drills. A variable speed drill is an excellent tool for use as a power screwdriver. Portable drills may be equipped with a reversing switch to allow a screwdriver attachment to reverse bolts and screws out of holes. Special 90° angle portable drills (Figure 3-8) are available for drilling in confined spaces where a standard size drill will not have sufficient clearance. For corners and tight spots, a 360° angle portable pneumatic drill (Figure 3-2) is available which can be swiveled to any desired angle and locked into position. Most portable drills have a lock button near the on-off switch which allows for continuous operation without holding the trigger. Side handles and rear spade handles (Figure 3-5) can be attached to most drills to stabilize drilling and to allow for better control. Special devices. such as a vertical stand (Figure 3-6) or feed screw (Figure 3-7), can be used on some of the portable drills to make a job easier or more proficient.

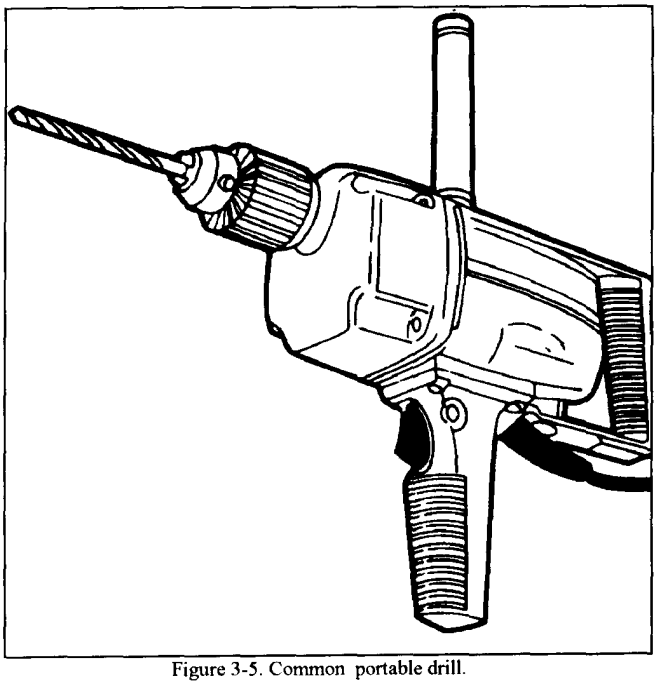

Figure 3-5. Common portable drill.

The size, type. and power capacity of portable drills selected depends on the job to be performed. Before attempting a drilling job, check the capabilities of the portable drill with the manufacturer's instruction manual.

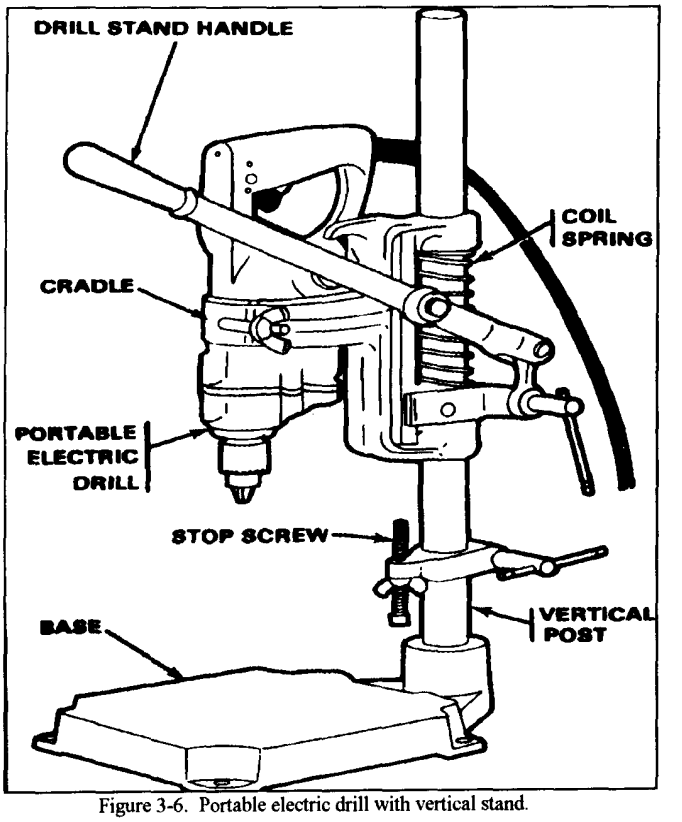

Figure 3-6. Portable electric drill with vertical stand.

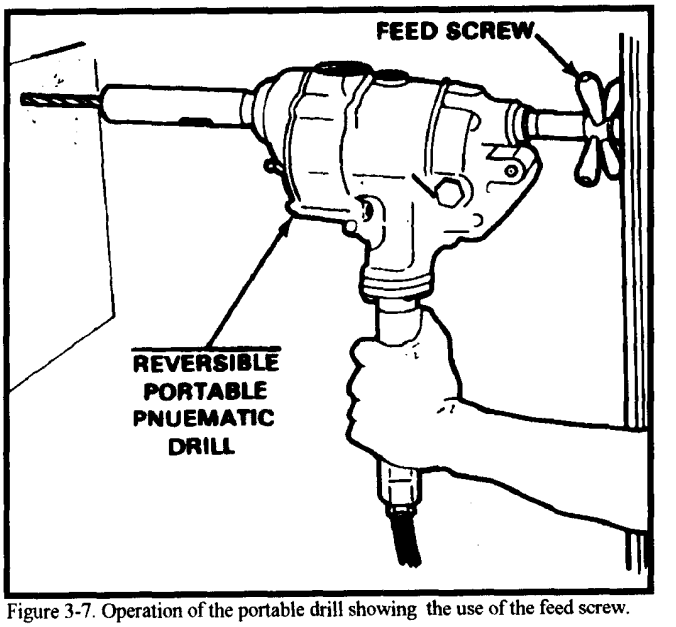

Figure 3-7. Operation of the portable drill showing the use of the feed screw.

DRILLING OPERATIONS

Operation of the portable electric and pneumatic drills differs from recommended operating procedures for the upright drilling machine. The portable drill is hand supported for most operations, and the cutting speed of the drill is fixed or dependent upon the operator to control. When hand supported, the drill must be carefully aligned with the workpiece (Figure 3-9) and this alignment must be maintained throughout the drilling operation. Care must be taken not to lose control of the portable drill and allow it to be wrenched from the operator's hands. The larger portable drills (Figure 3-10) can be very dangerous if not held firmly by the operator. If the cutting speed is fixed, the operator must learn to control the feed of the portable drill by applying sufficient pressure for the drill to cut, but not too much pressure as to cause overheating of the twist drill or stalling of the portable drill motor.

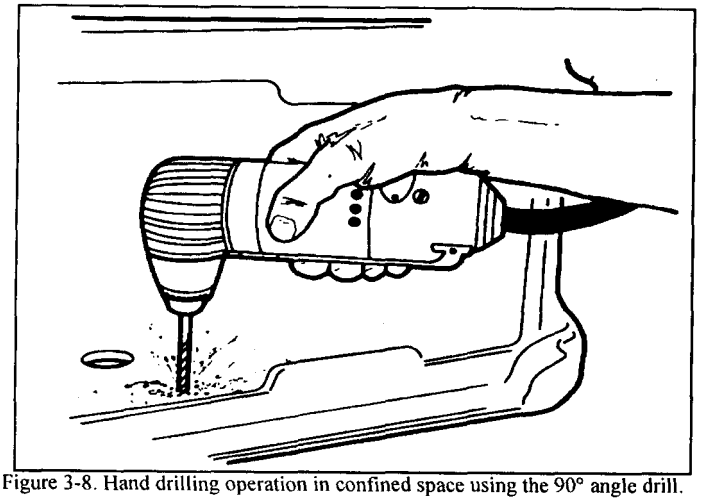

Figure 3-8. Hand drilling operation in confined space using the 90° angle drill.

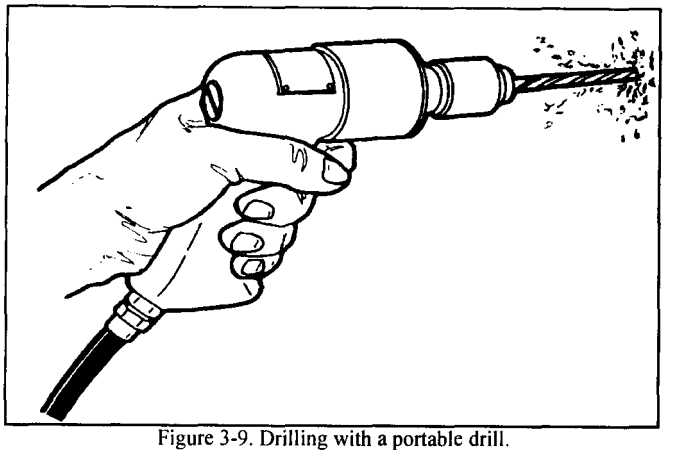

Figure 3-9. Drilling with a portable drill.

When metal is to be drilled with the portable drill, the workpiece must be prepared by locating the center position of the potential hole and marking the location with a center punch. When a large drill is to be used, it will be necessary first to drill a pilot hole slightly larger in diameter than the thickness of the larger drill's web, which will allow for the drag caused by the larger drill's chisel edge (Figure 3- 11).

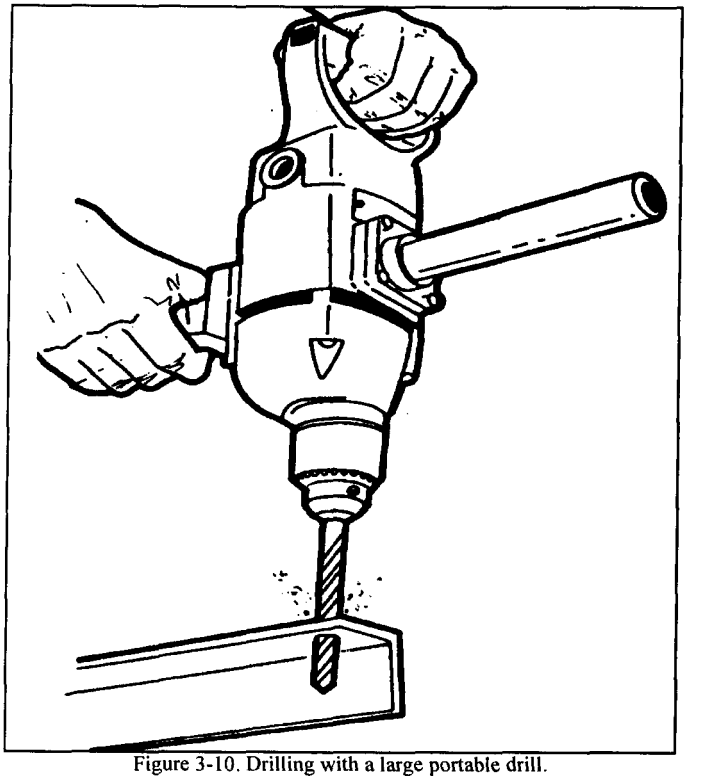

Figure 3-10. Drilling with a large portable drill.

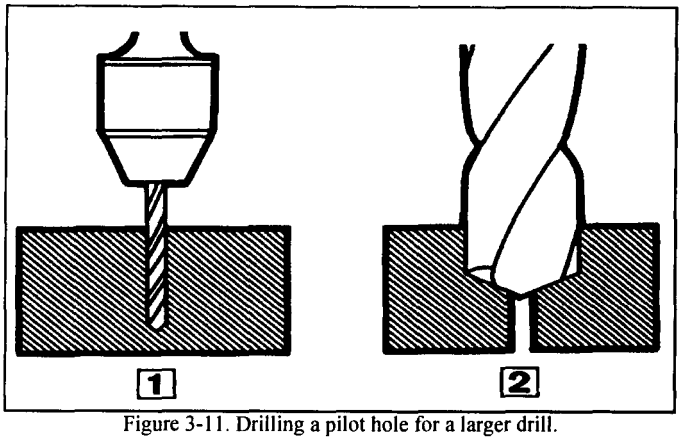

Figure 3-11. Drilling a pilot hole for a larger drill.

Portable pneumatic drills require special attention to lubricate their internal moving parts. Each drill may be made slightly different, so refer to the pertinent lubrication order or manufacturer's instruction manual before drilling.

For drilling by hand, the workpiece must be mounted securely. Thin workplaces should be backed up with a thicker piece of wood or metal to prevent the drill from snagging in the workpiece. Do not attempt to hold any workpiece by hand or serious injury could result.

Select a twist drill of the proper size for the hole to be drilled. Ensure that the twist drill selected has the right type of shank for the type of chuck mounted on the portable drill. Taper shank drills cannot be mounted in a drill with a geared chuck. Check each twist drill for sharp cutting edges prior to use.

After securing the twist drill in the proper chuck, connect the portable drill to its power source. Position the portable drill perpendicular to the workpiece and center the chisel point of the drill in the center-punched hole of the workpiece. Apply firm but not too heavy pressure upon the portable drill, pull the trigger or throttle button to start the drill.

Apply a few drops of cutting oil to the twist drill and hole (Figure 3-12) to improve the cutting action and prevent overheating of the twist drill. For long drilling operations, stop the drill and allow it to cool; then apply additional cutting oil to the drilling area. The lock button can be engaged for lengthy cutting operations.

Continue drilling the hole while applying enough pressure to produce a clean chip, but not so much pressure as to cause the motor to strain or the drill to bind. The drill must be held firmly at all times to prevent the drill from being wrenched from the hands of the operator if the flutes of the drill should snag on a metal burr in the hole.

As the twist drill nears the back wall of the workpiece, release the lock button so that the drill can be stopped immediately if required. Decrease the feed pressure as the drill breaks through, and cautiously feed the drill through the wall of the workpiece. If the drill should snag on a burr, stop drilling immediately and withdraw from the hole. Carefully feed the drill back into the hole while the drill is turning to cut through the burr.

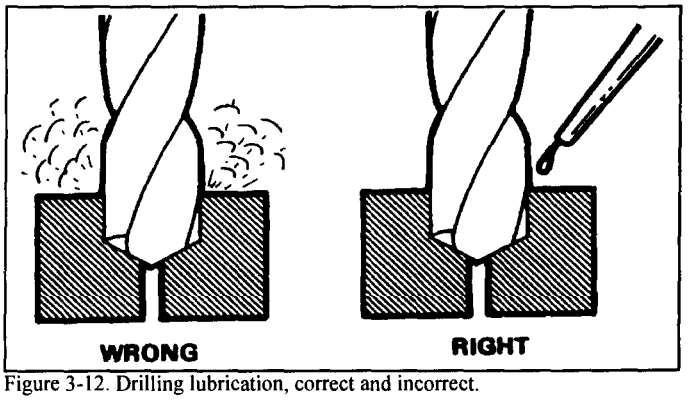

Figure 3-12. Drilling lubrication, correct and incorrect.

When a portable drill is mounted to a vertical stand, the operating procedure is identical to that used for the upright drilling machine. Use the lock button while drilling and use the hand lever to drill to the required depth.

Portable drilling operations can be difficult to an inexperienced operator. It is difficult to keep the twist drill perpendicular to the workpiece during drilling, and it is hard to drill to a desired depth accurately. If help is available, use the buddy system to keep the drill aligned while drilling. To drill to depth, mark the twist drill with a light colored marking pen or a strip of tape and keep a close watch on the drill as it cuts. Another way to drill to depth accurately using the portable drill is to use a jig, such as a piece of metal pipe or tubing cut to length, to indicate when the drill has reached the desired depth.

PORTABLE GRINDERS

PURPOSE AND TYPES

The portable grinder is a lightweight, hand-operated machine tool. It can be powered electrically or pneumatically, depending on the model selected. The portable grinder is used in the field or maintenance shop to grind excess metal from welds, remove rust, and for special finishing operations around the work area. Since this tool is hand operated, the quality of the work depends upon the ability and experience of the operator.

A small portable chuck type grinder may be known as a die grinder and is available with a number of accessories.

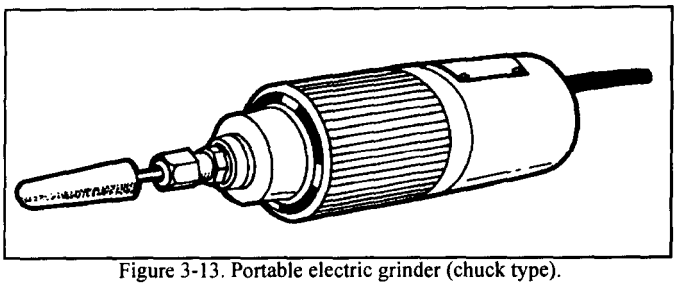
Figure 3-13. Portable electric grinder (chuck type).

These accessories include rotary files, small circular saws, wire brushes, assorted grinding wheels, and small sanding and polishing disks. These accessories are mounted to straight shank arbors which fit into the collet chuck of the grinder. Special reduction collets are provided so that smaller diameter arbors or shanks can be mounted in the chuck. Operations performed with this portable grinder include shaping and smoothing intricate dies and castings, removing burrs from edges and surfaces, cleaning and repairing threaded parts, repairing keyways and splines, grinding bevels, countersinking holes. and repairing scored and mutilated surfaces.

The portable grinder (wheel type) (Figure 3-14) can be electric or pneumatic and is designed for heavy-duty portable grinding operations. It is capable of mounting and rotating 6-inch-diameter grinding abrasive wheels and 6-inch-diameter wire brushes and polishing wheels. This grinder is used as a hand grinder for removing rust, corrosion, and sharp burrs from large workpieces (Figure 3-15).

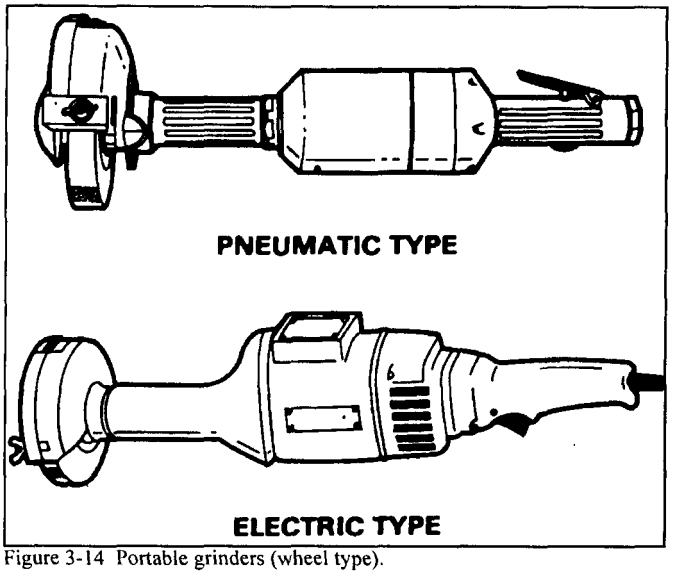

Figure 3-14 Portable grinders (wheel type).

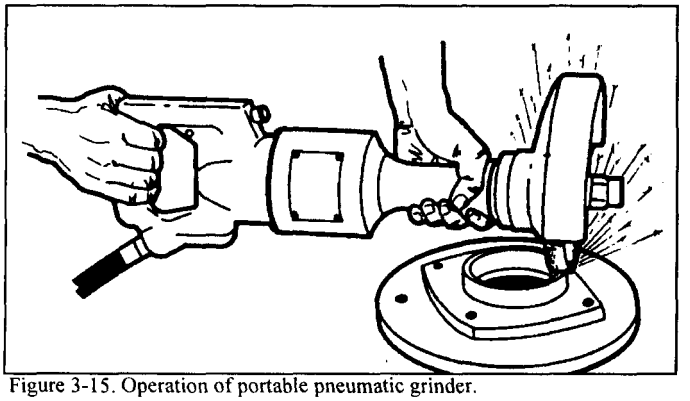
Figure 3-15. Operation of portable pneumatic grinder.

Most portable grinders come with a grinder stand (Figure 3-16). Mounted on this stand, the grinder can be used to sharpen twist drills and cutter bits in the machine shop. Most grinders also come equipped with a wheel guard that should remain in place at all times to protect the operator from flying sparks and waste material. The portable grinder is designed so that the face of the grinding wheel is used; never use the side of the wheel or serious injury or damage could occur (Figure 3-17).

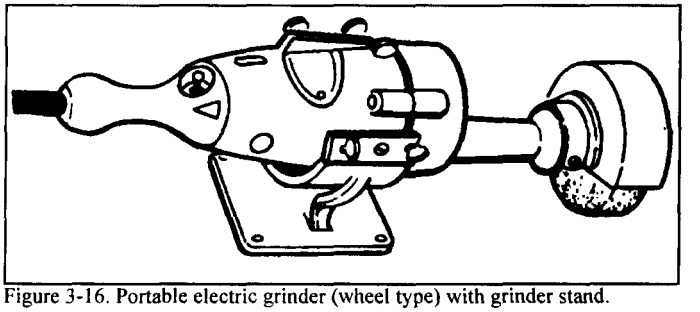
Figure 3-16. Portable electric grinder (wheel type) with grinder stand.

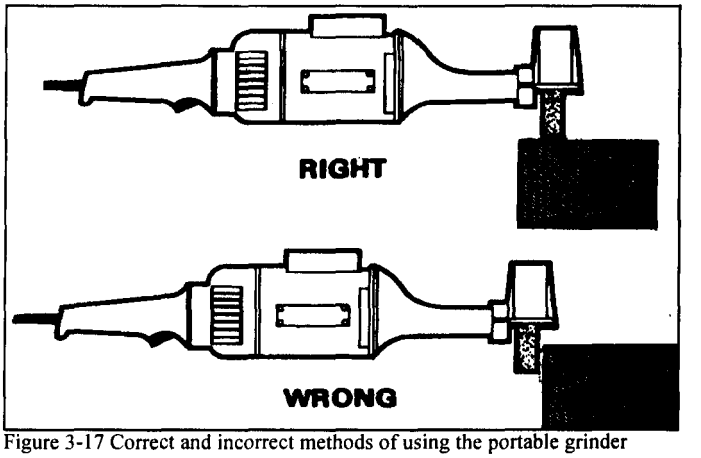

Figure 3-17 Correct and incorrect methods of using the portable grinder (wheel type).

The angle grinder (disk type) (Figure 3-18) can be electric or pneumatic, and is designed for heavy duty grinding operations. The angle grinder consists of a depressed center abrasive grinding disk with wheel guard attached to the basic portable motor assembly (Figure 3-19). Care must be taken to check the wheel for cracks and to ensure that the wheel guard stays in place while operating.

OPERATIONS WITH PORTABLE GRINDERS

Before operating any portable grinder, check the grinding wheel for cracks and check that the arbor hole is the proper size for the grinder to be used. When operating these grinders, keep a light pressure on the work to avoid damaging the wheel or overheating the workpiece.

Both the small and the larger portable grinders operate at a high speed, so avoid letting the wheel rest on one spot for too long. This could cause the work to burn or the wheel to crack and explode. Always check the manufacturer's instruction. manual before operation to ensure the grinding wheel's maximum rated speed is rated higher than the maximum speed of the grinder.

When grinding, buffing, or polishing with any portable grinder, always keep a firm grip on the tool to avoid injury or damage to equipment

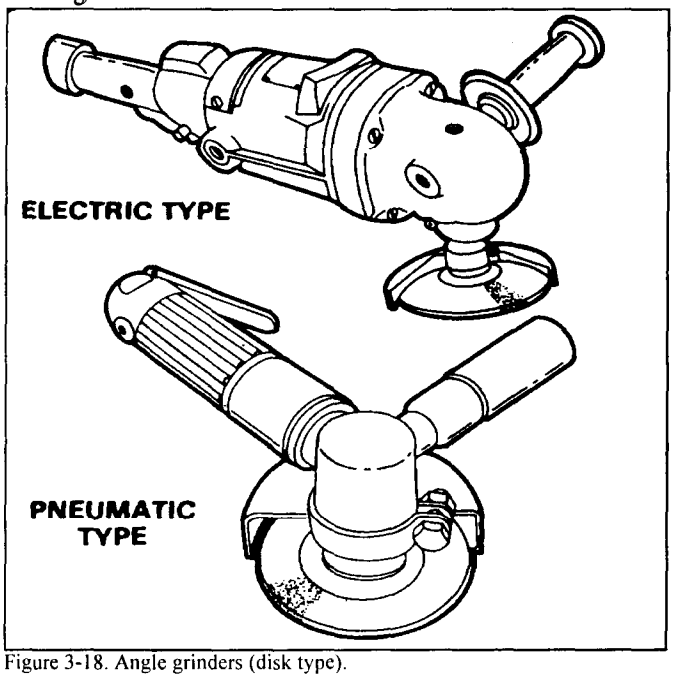

Figure 3-18. Angle grinders (disk type).

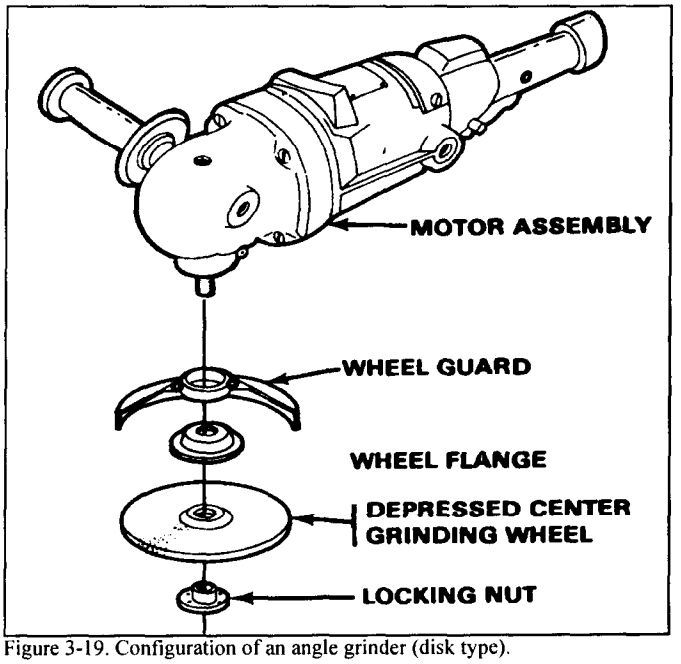

Figure 3-19. Configuration of an angle grinder (disk type).

PORTABLE SANDERS AND POLISHERS

PURPOSE AND TYPES

Portable sanders and polishers are used for surface finishing of materials such as metal, wood, ceramics, and plastics. Both tools are Lightweight and fairly easy cooperate. They can be powered electrically or pneumatically and can be light-duty or heavy duty.

Portable sanders are used to remove paint, rust, corrosion, and imperfections from the surface of workplaces to produce a smooth surface for finishing. Field and machine shop maintenance personnel use the disk-type portable sander (Figure 3-20). The disk-type portable sander has a high-speed motor that rotates an abrasive disk, wire wheel, or a grinding wheel to prepare a surface for finishing. For sanding, a disk of abrasive paper is mounted with a flexible backing pad on the motor spindle (Figure 3-21). The basic motor unit is similar to the motor unit used for angle grinding, but with sanding there is no need for a wheel guard. On some models the motor spindle can be locked by depressing a lock button to install or remove the sanding disks. A side handle on the motor housing is used to support the sander during operation. This handle can be removed and screwed into the opposite side of the motor housing for left-handed operation. Pneumatic sanders have an advantage over electric sanders because they are lighter in weight and easier to handle which usually produces a better finished product.

NOTE: Portable sanders are not intended for use as portable abrasive cutoff saws. The torque for cut off sawing will ruin the soft gearing in the sander motor unit.

Various abrasive disks are used in the operation of the portable electric sander. These disks consist of different abrasive grains that have been bonded or glued onto a cloth or paper disk (see Table 3-2) in Appendix A..

The backing material that supports the abrasive disk is made of a tough vulcanized rubber or fiber that can withstand

hard use and constant flexing. Normally, the abrasive grain used on the disk is aluminum oxide, and the bonding agent is glue or special resin. Abrasive disks come in open-coat or closed-coat types, depending on the work to be performed. The closed-coat disk has the abrasive grains bonded close together, while the open-coat disk has the abrasive grains spaced further apart. Open-coat abrasive disks are used for sanding soft materials that could possibly load up a closed-coat disk, for example, wood sanding, removing paint and rust, and plastic. Closed-coat abrasive disks are used for sanding metal, finishing ceramics, and for smoothing rougher sanded areas.

Most portable sanders come with an instruction manual and those accessories that the manufacturer recommends for its use. These accessories can include a sanding setup which includes a flexible rubber backing plate, several types of sanding disks, and the hardware to secure the disk to the motor assembly. Other accessories may include flexible grinding disks with wheel guards, wire wheels, and odd-shaped grinding cups with the appropriate wheel guard. Only use accessories approved by the manufacturer to avoid injury or damage to equipment.

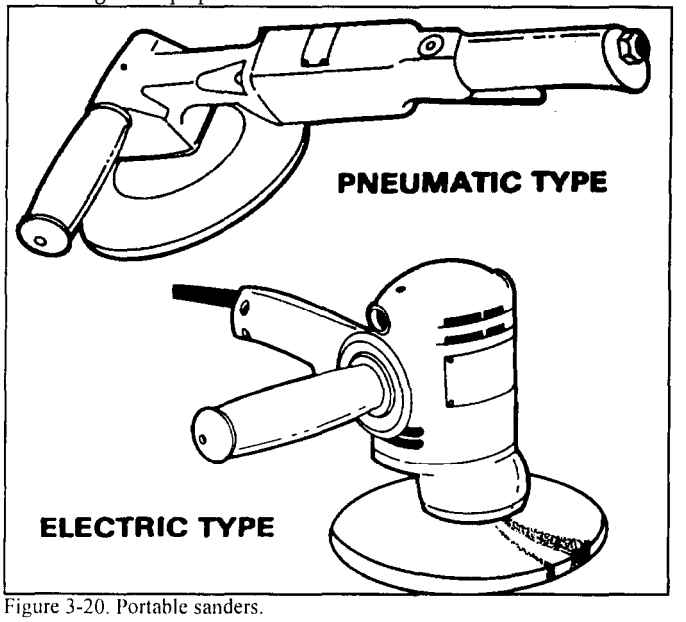

Figure 3-20. Portable sanders.

The portable polisher (Figure 3-22) is used to produce a super finish or shine to the workpiece surface. Polishing or buffing a surface is desirable at times to increase smoothness and make the surface easier to clean. By polishing a surface, a workpiece can also be made more wear resistant. Portable polishers are generally more powerful than portable sanders

Since they encounter a greater frictional resistance when in operation, portable polishers operate at slower speeds than portable sanders so as not to mar the finished surface. Pneumatic portable polishers are lighter in weight than electric models and may make fewer buffing marks on the finish. In order to improve the surface quality of a workpiece through polishing, it is necessary to use a soft bonnet or cover over the sander backing pad.

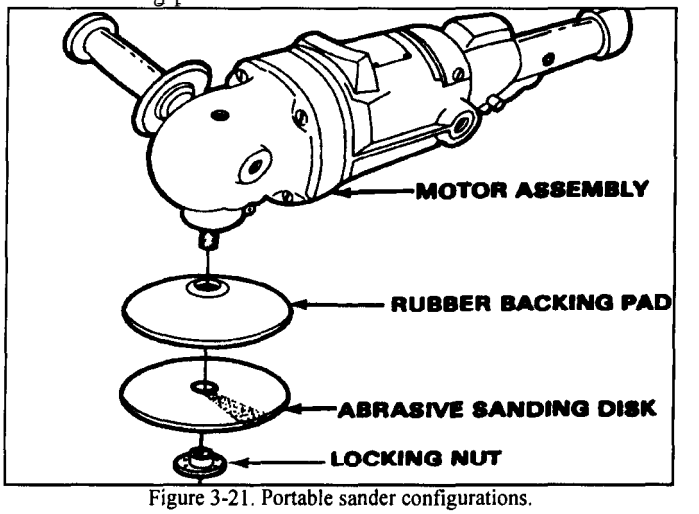

Figure 3-21. Portable sander configurations.

Lamb's wool polishing bonnets are recommended with a soft rubber cushion pad separating the bonnet and the backing pad. Polishing compound, which is a mild abrasive, is used to help polish the surface. A left- or right-handed side handle is attached to the motor housing to help control the polisher during operations.

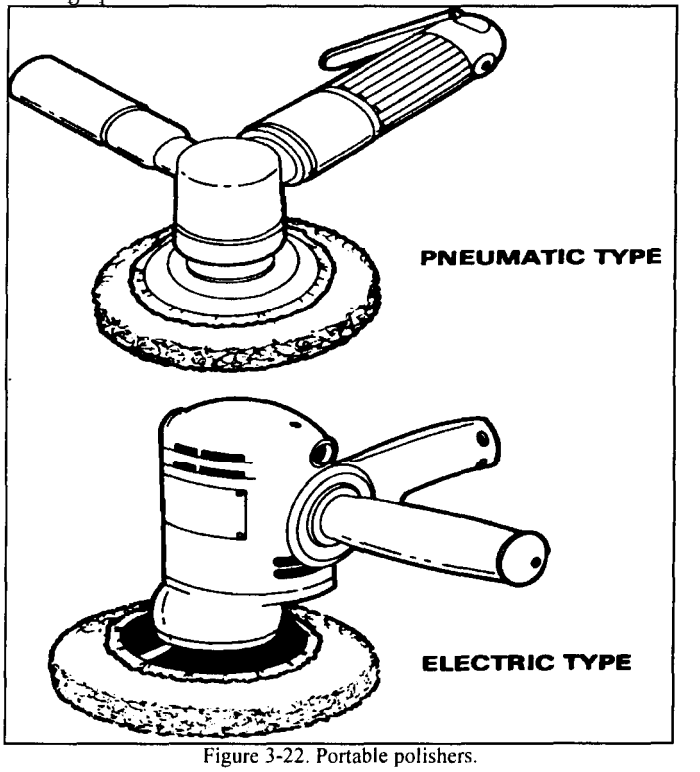

Figure 3-22. Portable polishers.

OPERATIONS WITH THE PORTABLE SANDER AND POLISHER

Operating the portable sander is difficult due to the rotating force of the disk, so the quality of the work depends mostly on the experience of the machine operator. Hold the portable sander so that the abrasive disk forms an angle of approximately 15° to the workpiece surface (Figure 3-23). Apply just enough pressure against the sander to bend the sanding pad and abrasive disk so that about 2 inches of the disk contact the surface. Move the sander from side to side, overlapping each path with the next. If the sander cuts irregularly or is hard to control, the sander is most likely at an angle less than the required 15° to the workpiece. If the sander gouges or leaves rough edges, the angle formed by the sander is most likely too great. When the sander is operating, keep it moving back and forth across the workpiece or lift it free to avoid damaging the surface.

The portable polisher looks like the portable sander but it is built with a slower speed and high torque needed for polishing. Polishing is performed by placing the spinning lamb's wool polishing bonnet lightly against the workpiece and moving the polisher lightly back and forth while maintaining a light pressure on the workpiece. Avoid pressing down too hard, or the surface could get damaged. Use separate polishing bonnets for different polishing abrasives, glazes, or waxes. Reapply polishing compound as needed to keep a smooth finish.

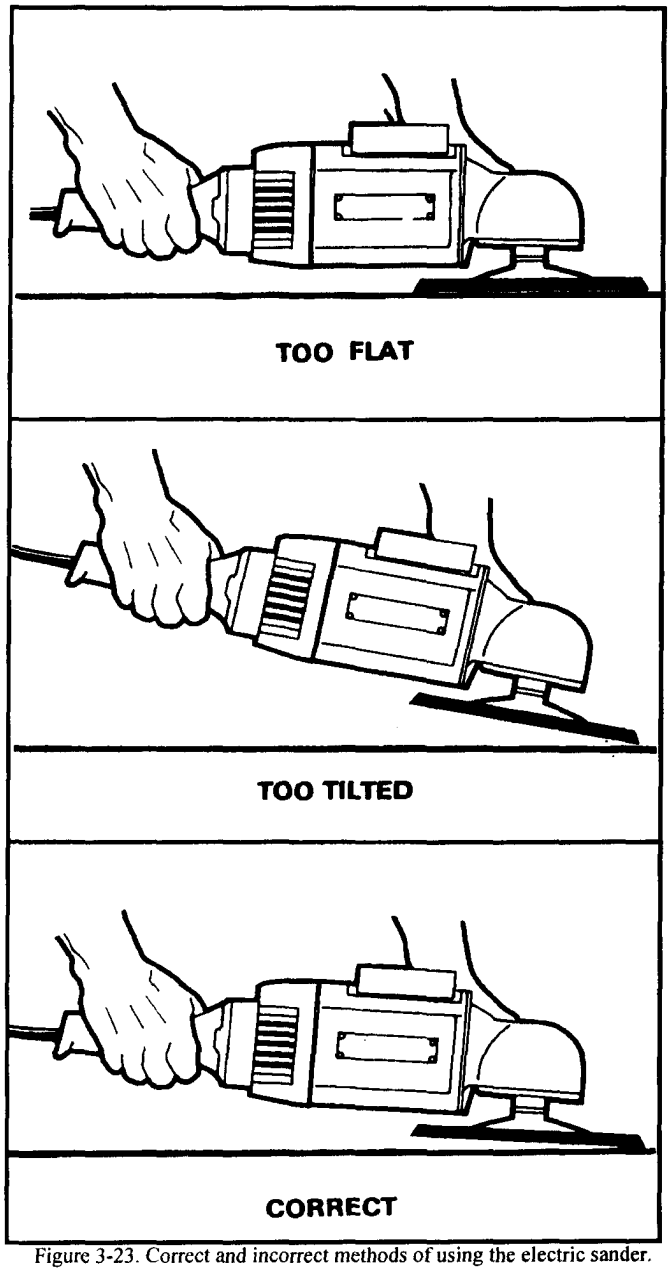

Figure 3-23. Correct and incorrect methods of using the electric sander.

PORTABLE METAL SAWING MACHINES

PURPOSE AND TYPES

The portable metal sawing machines described in this section are those lightweight and easily transportable saws that are used in a field or normal machine shop by maintenance personnel. These saws can be used to cut stock that is too big or too long to move to a maintenance shop to be cut. The following portable sawing machines are described in this section: the portable hacksawing machine, the portable band sawing machine, and the portable reciprocating saw. Two of these saws are operated by hand, so the quality of work depends upon the experience and skill of the operator. Portable metal sawing machines can be used in the maintenance shop to cut wood, steel, plastics, electrical conduit, tubing, pipes, and shop stock, and for auto body work.

THE PORTABLE HACKSAWING MACHINE

The portable hacksawing machine (Figure 3-24) is not designed to be hand-held, but to lock onto the workpiece with a self-contained vise. This saw has a built-in electric motor that causes a power hacksaw blade to reciprocate at a fixed speed of 115 strokes per minute. The machine is capable of cutting solid steel 3 inches square and at an angle to 45°. This saw can be used in a horizontal, angular, or vertical position, having an adjustable counterbalance to compensate for operating the sawing machine in a vertical position. A 10-inch power hacksaw blade is used with this machine, producing a 4-inch stroke. A tension screw permits increasing or decreasing the blade pressure with each cut. The portable hacksawing machine will support itself when fastened very securely to a stationary workpiece, using the self-contained vise.

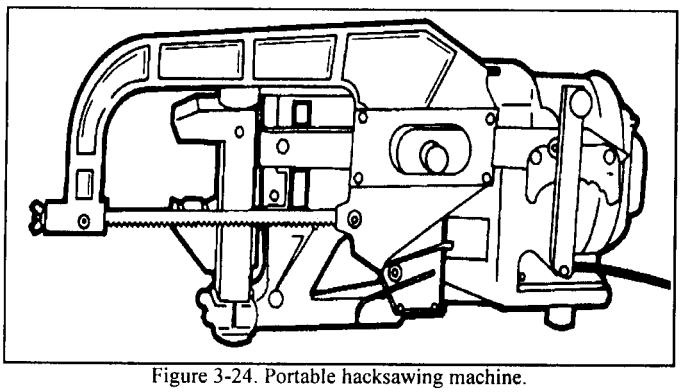

Figure 3-24. Portable hacksawing machine.

To operate the portable hacksawing machine, insert a power hacksaw blade of 18, 24, or 32 teeth per inch, depending on the material to be cut. Then, check the adjustment of the tension screw and the adjustment of the counterbalance lever. Turning the tension screw clockwise will increase the amount of lift the hacksaw blade makes on each return stroke and will increase the downward pressure of the blade on each cutting stroke. Counterclockwise rotation of the screw will decrease the lift and pressure. This control should be adjusted to cause the hacksaw blade to lift 1/8 inch on each return stroke to provide maximum cutting speed and efficiency. The counter balance lever controls the downward pressure exerted upon the hacksaw blade by the weight of the saw frame. By moving the counterbalance lever to the left, the pressure is decreased. Moving the lever to the right increases the pressure. Mount the workpiece squarely or angularly in the vise, depending on the type of cut desired. Start the sawing machine and observe the cutting action. If the machine strains, the blade pressure may be too heavy.

If the machine cuts very slowly, increase the pressure. Continuously check the power hacksaw blade for sharpness. If the blade is dull, it should be replaced. When the machine cuts completely through the material, the saw frame will fall and trip the motor switch, stopping the saw.

When the sawing machine is used in the vertical position, the counterbalance lever must be positioned in the farthest right notch of the guide bar ratchet to compensate for the lack of gravitational pressure normally applied to the blade by the saw frame. This practice should be attempted only if the workpiece can be clamped very securely in the vise and cannot be wrenched loose during vertical sawing, or damage to personnel or equipment could occur .

THE PORTABLE BAND SAWING MACHINE

The portable band sawing machine (Figure 3-25) or portable band saw is a lightweight, hand-held unit powered by an electric motor. The saw motor and gears rotate a solid steel band saw blade around two large wheel pulleys and through several saw blade guides at such an angle to give clearance to the workpiece being cut. The portable band saw can cut steel round stock to 3 3/8 inch diameter or steel rectangular stock 3 3/8-inch thick by 4 1/8 inch wide. The portable metal band sawing blades are 44 7/8 inches long and can have from 6 to 24 teeth per inch, providing a wide range of cutting capabilities (see Table 3-3 in Appendix A). Single-speed band saw models are designed for softer metals, such as brass, aluminum, and mild steel. Two-speed and variable speed models can be switched to a low speed to cut harder metals, such as stainless steel or tungsten. The band saw blade is completely enclosed, using the motor housing as a blade guard, except for the exposed part of the blade that does the sawing. A hand grip and trigger switch are provided on one end of the saw and a knob grip is on the other end to provide for maximum control while sawing.

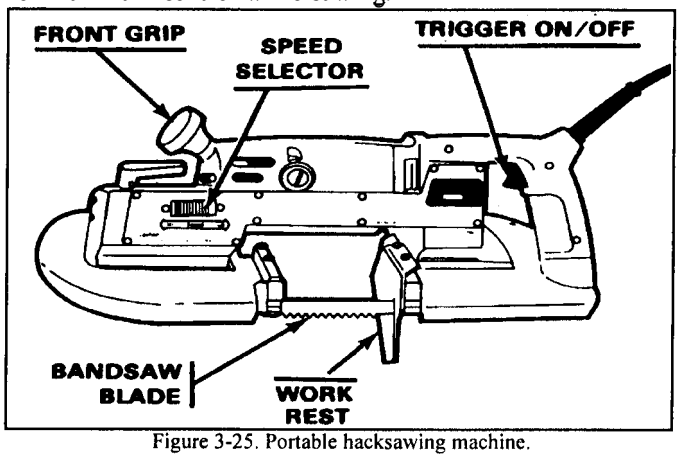

Figure 3-25. Portable hacksawing machine.

To start sawing, make sure that the material to be cut is held very securely in the vise to avoid excessive vibration. Select the appropriate blade for the material to be cut and mount the blade securely into the portable band saw in accordance with the manufacturer's instructions. Take hold of the front knob grip handle and rear hand grip handle and squeeze the trigger switch to start the saw blade in motion. Set the speed appropriately if operating a two-speed or variable-speed model. Gently lower the portable band saw onto the workpiece, being careful to use the weight of the machine as pressure to cut. If the operator uses additional pressure on the workpiece, the saw blade will slow down and reduce the cutting efficiency. Hold the machine steady and the saw blade straight to avoid twisting or breaking the blade. At the completion of the cut, do not allow the saw to fall onto the workpiece. Maintain hand control of the machine, release the trigger switch, and allow the blade to stop before setting down the saw. Never use a liquid coolant with the portable band sawing machine as this could damage the saw guide bearings or rubber pulleys. Lubricate and service each saw as specified in the manufacturer's instructions.

THE PORTABLE RECIPROCATING SAW

The portable reciprocating saw (Figure 3-26) is a hand-held lightweight machine tool that can be electrically or pneumatically powered, depending on the model selected. The saw motor and gearing cause a single knife-like blade to move rapidly in and out, sawing across a workpiece as hand pressure is applied. The saw may be a one-speed model or two speed model. The one-speed model operates at high speed only and is used for cutting soft materials like wood or sheet rock. The two-speed models have a switch that can move the speed from high speed to low speed, so that harder materials, such as metal pipes and steel sheets, can be cut.

The portable reciprocating saw, with the proper blade installed, can cut through steel stock up to 1 inch square or steel pipe up to 4 inches in diameter. An enclosed hand grip handle with trigger switch is provided at one end of the saw and another hand grip is toward the front of the saw, near the blade, to provide for maximum control while sawing. The blade freely protrudes from an angled work rest that is attached to the motor housing. There is no blade guard, so care must be exercised at all times.

To start sawing, ensure the material to be cut is held securely to avoid vibration that could break the saw blade. Select the right blade for the material to be cut and mount the blade into the blade clamp according to the manufacturer's instructions. Check the speed setting, get a firm grip on both handles, and squeeze the trigger switch. Guide the saw so that the work rest is against the workpiece and lower the saw until the blade starts cutting into the workpiece. Keep a firm grip through the saw cut and control the saw to avoid twisting or breaking the blade. After the cut is completed, maintain control of the saw and release the trigger switch. Allow the blade to come to a complete stop before laying the tool down. Periodically lubricate and service the portable reciprocating saw according to the manufacturer's instructions.

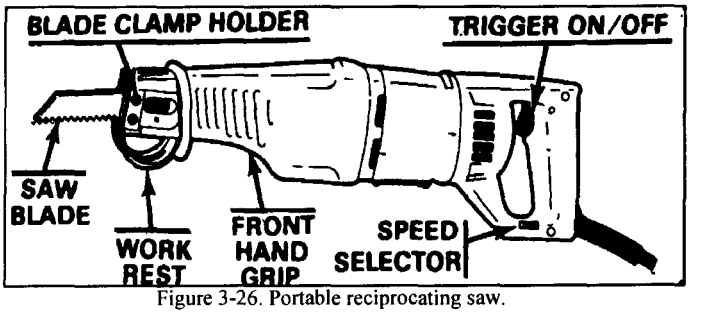

Figure 3-26. Portable reciprocating saw.

PORTABLE METAL CUTTING SHEARS PURPOSE AND TYPES

PURPOSE AND TYPES

The portable metal cutting shears are lightweight, hand-held power tools used to cut through sheet metal. These shears are capable of continuous cutting along a straight or irregular line on a workpiece. Field and machine shop maintenance personnel use the portable metal cutting shears for sheet metal trimming, auto body work, duct work, aircraft structural repair, and cutting template patterns. These tools can be powered by an electric motor or air depending on the model selected.

There are two basic types of portable metal cutting shears: the heavy-duty type with the upper movable blade (single-cut) (Figure 3-27), and the light-duty type with the scissor action blade (doublecut) (Figure 3-28). Both types of shears work well, but there are slight differences in the operation and capabilities of each. Since these are hand controlled tools, the quality of work performed depends upon the experience and skill of the operator.

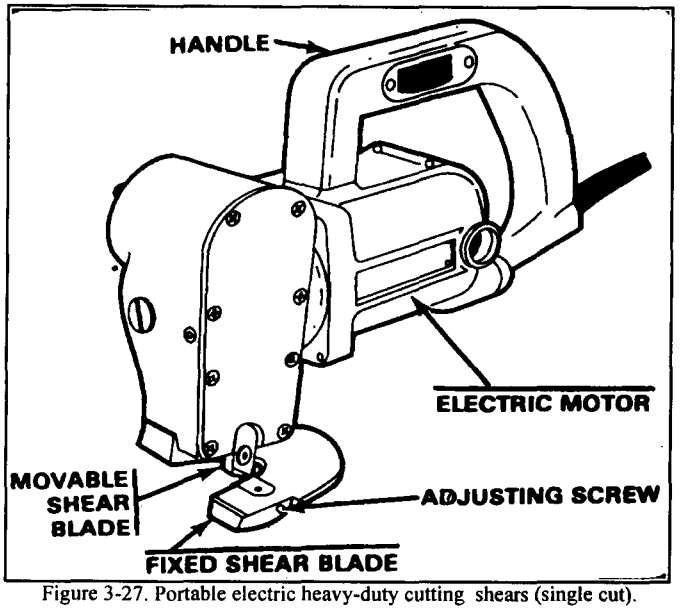

Figure 3-27. Portable electric heavy-duty cutting shears (single cut).

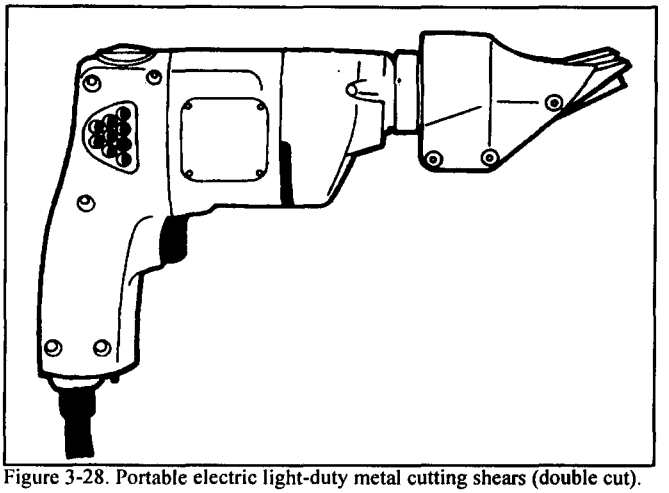
Figure 3-28. Portable electric light-duty metal cutting shears (double cut).

The heavy-duty portable metal cutting shears have an upper, movable shear blade that moves up and down very rapidly over a fixed lower blade so that a continuous single-cut action occurs. The single-cutting action of these shears can cause the sheet metal being cut to warp or bend, so these shears are not recommended for making precision templates or very flat sheet metal pieces. Some models of the very heavy-duty portable metal cutting shears can cut mild sheet steel up to #6 gage or about 3/16-inch, but most maintenance shops use the normal heavy-duty shears capable of cutting up to #12 gage (about 7/64-inch) or thinner. Softer metals can be slightly thicker than the rating for sheet metal and still be cut successfully. The heavy-duty type shear has a blade clearance adjustment so that the best cutting action can be obtained for each type and thickness of metal.

The light-duty portable metal cutting shears operate with a scissor-like motion that makes a double cut by removing a strip of metal about 1/4 inch wide which produces a distortion-free piece (Figure 3-29). These shears are used for thin sheet metal, such as #18 gage (about 3/64-inch) or thinner. A hole about 3/8 inch in diameter is needed to gain access for inside cutting. The rapidly reciprocating blade enables these shears to cut intricate patterns, make models, trim gaskets, and cut out templates from different sheet metal materials. These light-duty type of shears are lighter in weight and much easier to handle than the larger heavy-duty type. The cutting blade clearance is set at the factory, so the only adjustment is to sharpen the blades if the cutting action becomes difficult.

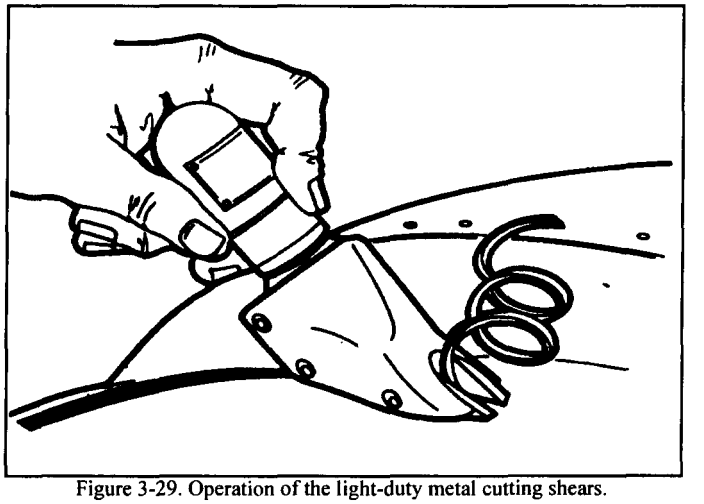
Figure 3-29. Operation of the light-duty metal cutting shears.

OPERATION OF THE PORTABLE METAL CUTTING SHEARS

Successful operation of the portable metal cutting shears depends upon two important factors: sharp shear blades and proper shear blade clearance. The shear blades are easily taken out and sharpened or replaced as needed. Each model is slightly different, so follow the manufacturer's instructions on sharpening or changing the shear blades. When sharpening the shear blades, grind only the top and bottom edges. Never grind the sides of the blades.

If the metal being cut twists or jams beneath the blades, the most likely cause is excessive blade clearance. If the shears bind or stall when cutting through the metal, or if the blades tend to double shear and produce a burred edge, then the blade clearance is probably too small. Sharpen or replace the shear blades if the cutting action becomes slowed or stops, or if the workpiece edges become burred.

Before starting to cut, scribe a line on the workpiece. Holding the portable metal cutting shears in one hand, start cutting from the edge of the sheet metal while keeping the scribed line alongside the reciprocating blade. Only a light forward pressure is required to guide the shears through the metal. Any irregular contours can be followed quickly and easily because one blade is always visible to the operator. If the shear blades are sharp and the clearance for the blades is correct, a clean, smooth cutting action should occur.

PORTABLE COOLANT ATTACHMENT

PURPOSE

The portable coolant attachment is a device for supplying coolants and cutting oils for cutting operations with machine tools when continuous application of a coolant or cutting oil is required. The portable coolant attachment consists of a container to hold the coolant or cutting oil, a pump to force the coolant through a flexible hose directed at the cutting tool and workpiece, and a pan arrangement beneath the machine tool to catch the coolant or cutting oil, filter it, and return it to the container.

The portable coolant attachment (Figure 3-30) is self-contained and powered by an electric motor. The coolant container and catch pans are attached to the bed or frame of the machine tool beneath the work area, and a flexible metal hose is positioned where the stream of coolant or cutting oil from the pump will flood the workpiece and cutting tool at their point of contact. The pans beneath the workpiece catch the coolant as it splashes from the workpiece and strain the coolant as it flows back to the container for recirculation. Coolant can be controlled by a valve at the base of the flexible hose. A pipe plug is provided at the base of the container to drain the coolant from the container after use. The portable coolant attachment moves easily from one machine to another to provide various machines with cooling capabilities.

COOLANT ATTACHMENT OPERATION

The portable coolant attachment serves the needs of a machine shop in a field or regular maintenance facility. It provides coolant for lathes, mills, drilling machines, grinders, sawing machines, and other machine tools. The attachment should be set up under the area of the machine tool that does the cutting action and needs to be cooled. The drip or catch pans should be arranged horizontally to catch the coolant as it drips from the workpiece. Position the flexible hose so that it directs a stream of coolant to the point of contact between the cutting tool and the workpiece.

The portable coolant attachment is a device for supplying coolants and cutting oils for cutting operations with machine tools when continuous application of a coolant or cutting oil is required. The portable coolant attachment consists of a container to hold the coolant or cutting oil, a pump to force the coolant through a flexible hose directed at the cutting tool and workpiece, and a pan arrangement beneath the machine tool to catch the coolant or cutting oil, filter it, and return it to the container.

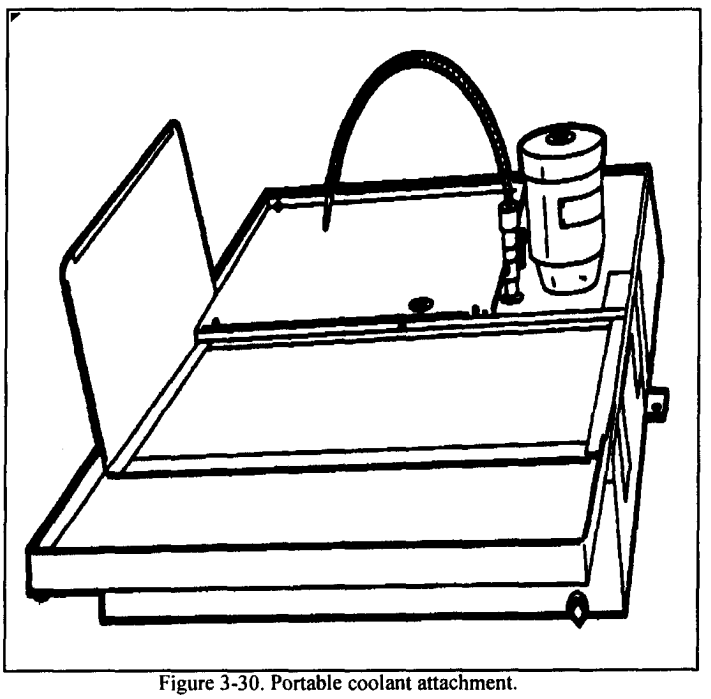

Figure 3-30. Portable coolant attachment.

If the cutting tool moves along the workpiece, clip the hose end to the cutting tool carriage so that the hose will move with the tool.

The material to be machined will determine whether to use a coolant or a cutting oil. Fill the container of the portable coolant attachment with the selected coolant or cutting oil. Start the pump motor of the attachment before starting the machine tool to check the flow of coolant over the workpiece being machined, and adjust the stream flow as necessary. Start the machine tool and perform the cutting operation. At the conclusion of the operation, stop the pump motor. Drain the coolant or cutting oil from the container by removing the plug at the bottom of the container. Clean out the container, pump, and hose before using a different type of coolant.

Chapter 4

DRILLING MACHINES

GENERAL INFORMATION

PURPOSE

This chapter contains basic information pertaining to drilling machines. A drilling machine comes in many shapes and sizes, from small hand-held power drills to bench mounted and finally floor-mounted models. They can perform operations other than drilling, such as countersinking, counterboring, reaming, and tapping large or small holes. Because the drilling machines can perform all of these operations, this chapter will also cover the types of drill bits, took, and shop formulas for setting up each operation.

Safety plays a critical part in any operation involving power equipment. This chapter will cover procedures for servicing, maintaining, and setting up the work, proper methods of selecting tools, and work holding devices to get the job done safely without causing damage to the equipment, yourself, or someone nearby.

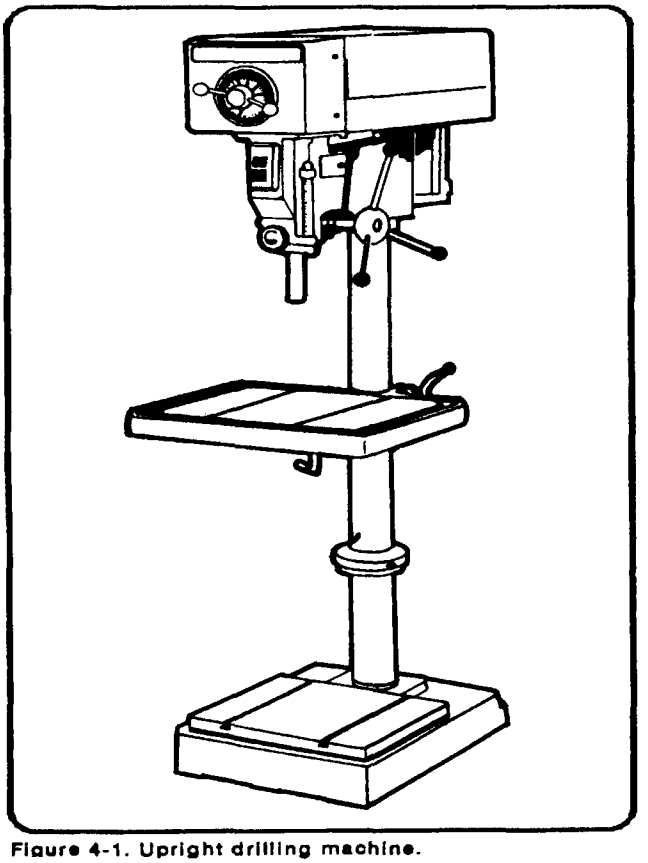

Figure 4-1. Upright drilling machine.

USES

A drilling machine, called a drill press, is used to cut holes into or through metal, wood, or other materials (Figure 4-1). Drilling machines use a drilling tool that has cutting edges at its point. This cutting tool is held in the drill press by a chuck or Morse taper and is rotated and fed into the work at variable speeds. Drilling machines may be used to perform other operations. They can perform countersinking, boring, counterboring, spot facing, reaming, and tapping (Figure 4-2). Drill press operators must know how to set up the work, set speed and feed, and provide for coolant to get an acceptable finished product. The size or capacity of the drilling machine is usually determined by the largest piece of stock that can be center-drilled (Figure 4-3). For instance, a 15-inch drilling machine can center-drill a 30-inch-diameter piece of stock. Other ways to determine the size of the drill press are by the largest hole that can be drilled, the distance between the spindle and column, and the vertical distance between the worktable and spindle.

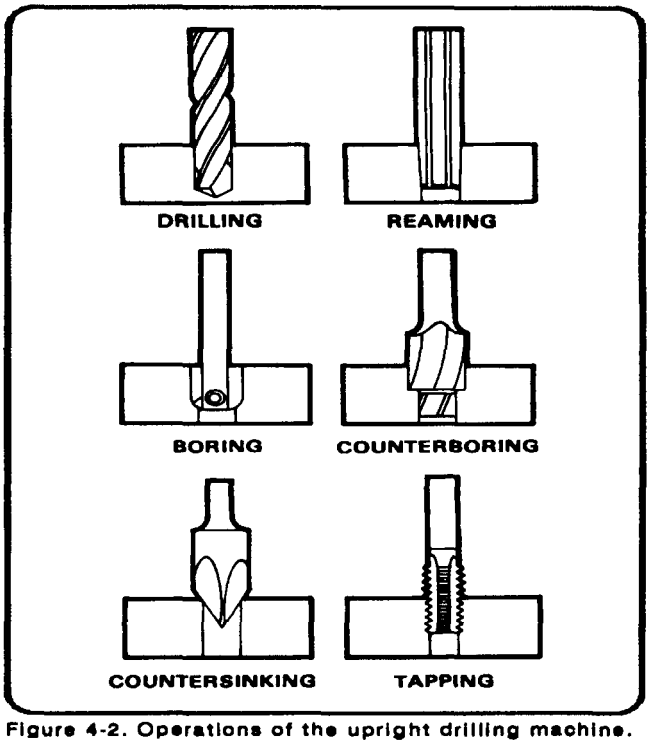

Figure 4-2. Operations of the upright drilling machine.

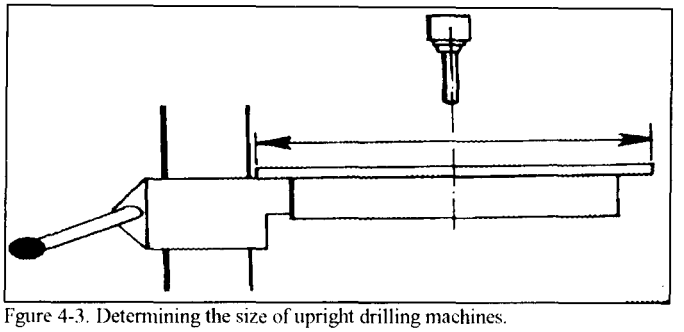

Figure 4-3. Determining the size of upright drilling machines.

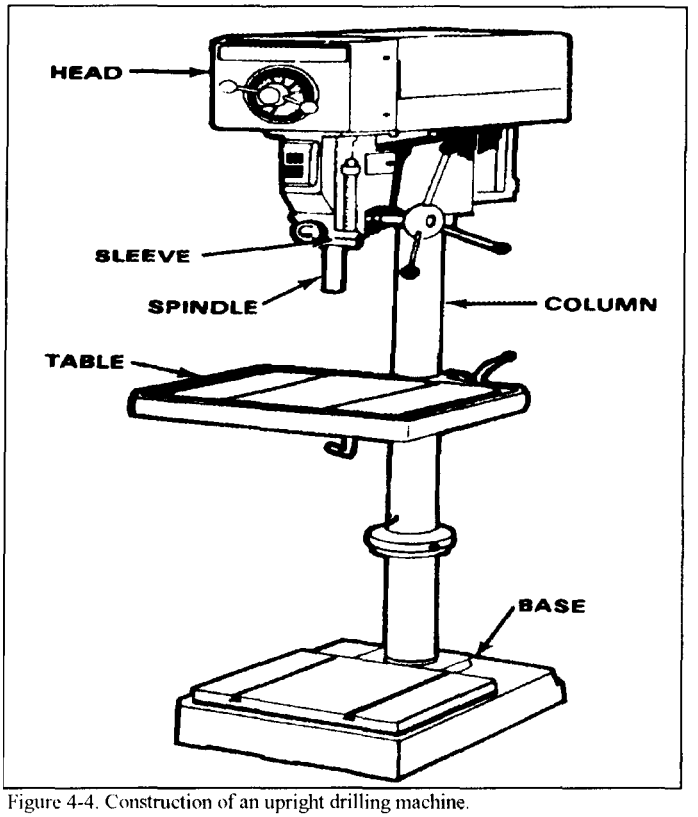

Figure 4-4. Construction of an upright drilling machine.

CHARACTERISTICS

All drilling machines have the following construction characteristics (Figure 4-4): a spindle. sleeve or quill. column, head, worktable, and base.

- The spindle holds the drill or cutting tools and revolves in a fixed position in a sleeve. In most drilling machines, the spindle is vertical and the work is supported on a horizontal table.
- The sleeve or quill assembly does not revolve but may slide in its bearing in a direction parallel to its axis. When the sleeve carrying the spindle with a cutting tool is lowered, the cutting tool is fed into the work: and when it is moved upward, the cutting tool is withdrawn from the work. Feed pressure applied to the sleeve by hand or power causes the revolving drill to cut its way into the work a few thousandths of an inch per revolution.
- The column of most drill presses is circular and built rugged and solid. The column supports the head and the sleeve or quill assembly.
- The head of the drill press is composed of the sleeve, spindle, electric motor, and feed mechanism. The head is bolted to the column.
- The worktable is supported on an arm mounted to the column. The worktable can be adjusted vertically to accommodate different heights of work. or it may be swung completely out of the way. It may be tilted up to 90° in either direction, to allow for long pieces to be end or angled drilled.
- The base of the drilling machine supports the entire machine and when bolted to the floor, provides for vibration-free operation and best machining accuracy. The top of the base is similar to a worktable and maybe equipped with T-slots for mounting work too large for the table.

CARE OF DRILLING MACHINES

Lubrication

Lubrication is important because of the heat and friction generated by the moving parts. Follow the manufacturer's manual for proper lubrication methods. Clean each machine after use. Clean T-slots. grooves. and dirt from belts and pulleys. Remove chips to avoid damage to moving parts. Wipe all spindles and sleeves free of grit to avoid damaging the precision fit. Put a light coat of oil on all unpainted surfaces to prevent rust. Operate all machines with care to avoid overworking the electric motor.

Special Care

Operations under adverse conditions require special care. If machines are operated under extremely dusty conditions. operate at the slowest speeds to avoid rapid abrasive wear on the moving parts and lubricate the machines more often. Under extreme cold conditions, start the machines at a slow speed and allow the parts and lubricants to warm up before increasing the speeds. Metal becomes very brittle in extreme cold. so do not strike the machines with hard tools. Extreme heat may cause the motor to overheat. so use intermittent. or on and off, operations to keep the motor running cool.

TYPES OF DRILLING MACHINES

There are two types of drilling machines used by maintenance personnel for repairing and fabricating needed parts: hand-feed or power-feed. Other types of drilling machines, such as the radial drill press. numerically controlled drilling machine. multiple spindle drilling machine, gang drilling machine, and turret drill press, are all variations of the basic hand and power-feed drilling machines. They are designed for high-speed production and industrial shops.

Drilling depth is controlled by a depth-stop mechanism located on the side of the spindle. The operator of the machine must use a sense of feel while feeding the cutting tool into the work. The operator must pay attention and be alert. to when the drill breaks through the work, because of the tendency of the drill to grab or snag the workpiece, wrenching it free of its holding device. Due to the high speed of these machines, operations that require drilling speeds less than 450 revolutions per minute cannot be performed.

Reaming, counterboring, and counter-sinking may require slower speeds than drilling and may not be able to be performed for all materials on these machines.

Hand-Feed

The hand-feed drilling machines (Figure 4-5) are the simplest and most common type of drilling machines in use today. These are light duty machines that are hand-fed by the operator, using a feed handle. so that the operator is able to "feel" the action of the cutting tool as it cuts through the workpiece. These drilling machines can be bench or floor-mounted. They are driven by an electric motor that turns a drive belt on a motor pulley that connects to the spindle pulley. Hand-feed machines are essentially high-speed machines and are used on small workplaces that require holes 1/2 inch or smaller. Normally, the head can be moved up and down on the column by loosening the locking bolts. which allows the drilling machine to drill different heights of work.

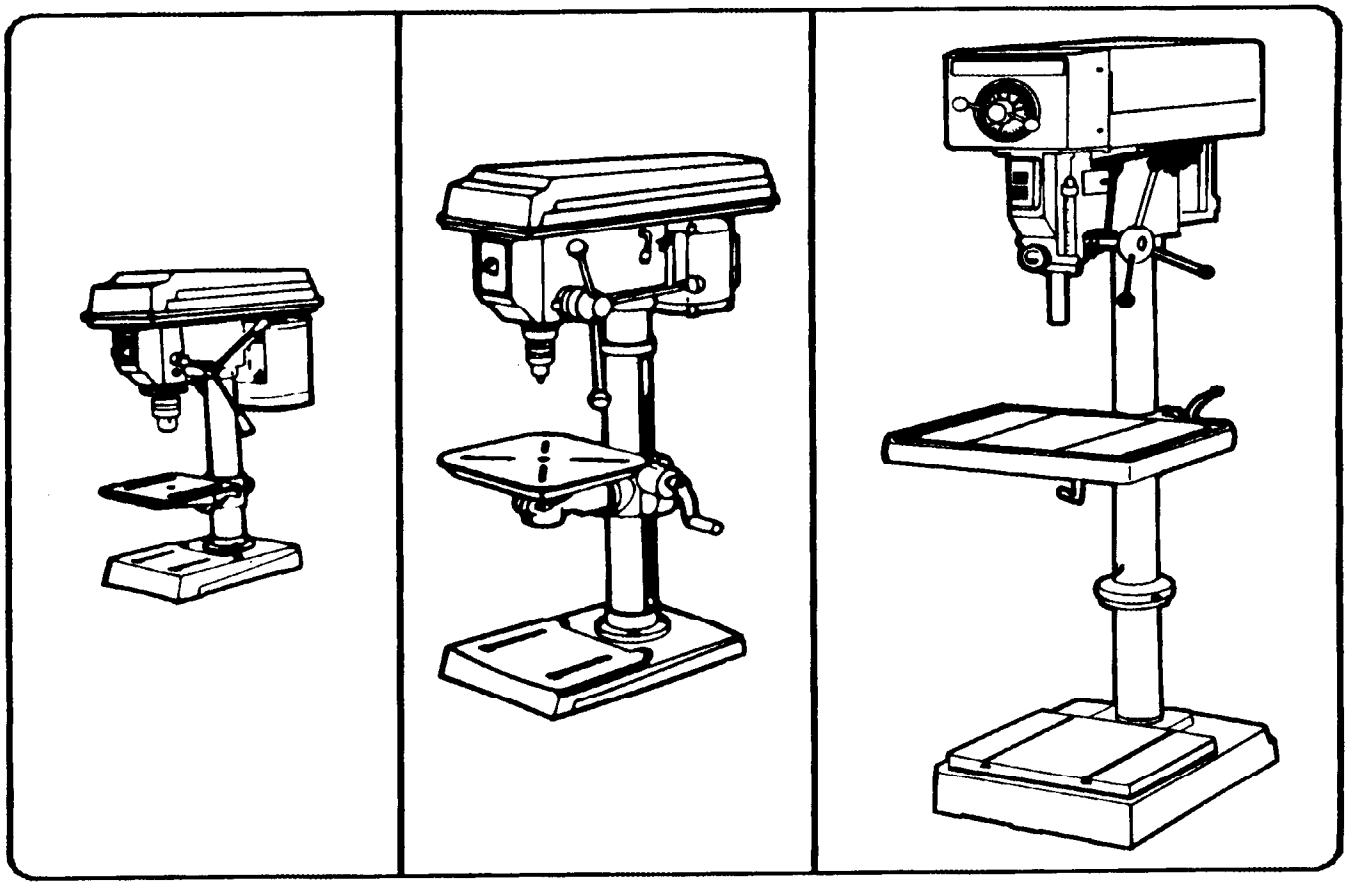

Figure 4-5. Hand-feed drilling machine.

Power-Feed

The power-feed drilling machines (Figure 4-6) are usually larger and heavier than the hand-feed. They are equipped with the ability to feed the cutting tool into the work automatically, at a preset depth of cut per revolution of the spindle, usually in thousandths of an inch per revolution.

These machines are used in maintenance shops for medium-duty work, or work that uses large drills that require power feeds. The power-feed capability is needed for drills or cutting took that are over 1/2 inch in diameter, because they require more force to cut than that which can be provided by using hand pressure. The speeds available on power-feed machines can vary from about 50 RPM to about 1,800 RPM. The slower speeds allow for special operations, such as counterboring, countersinking, and reaming.

The sizes of these machines generally range from 17-inch to a 22-inch center-drilling capacity, and are usually floor mounted. They can handle drills up to 2 inches in diameter, which mount into tapered Morse sockets. Larger workplaces are usually clamped directly to the table or base using T-bolts and clamps, while small workplaces are held in a vise. A depth-stop mechanism is located on the head, near the spindle, to aid in drilling to a precise depth.

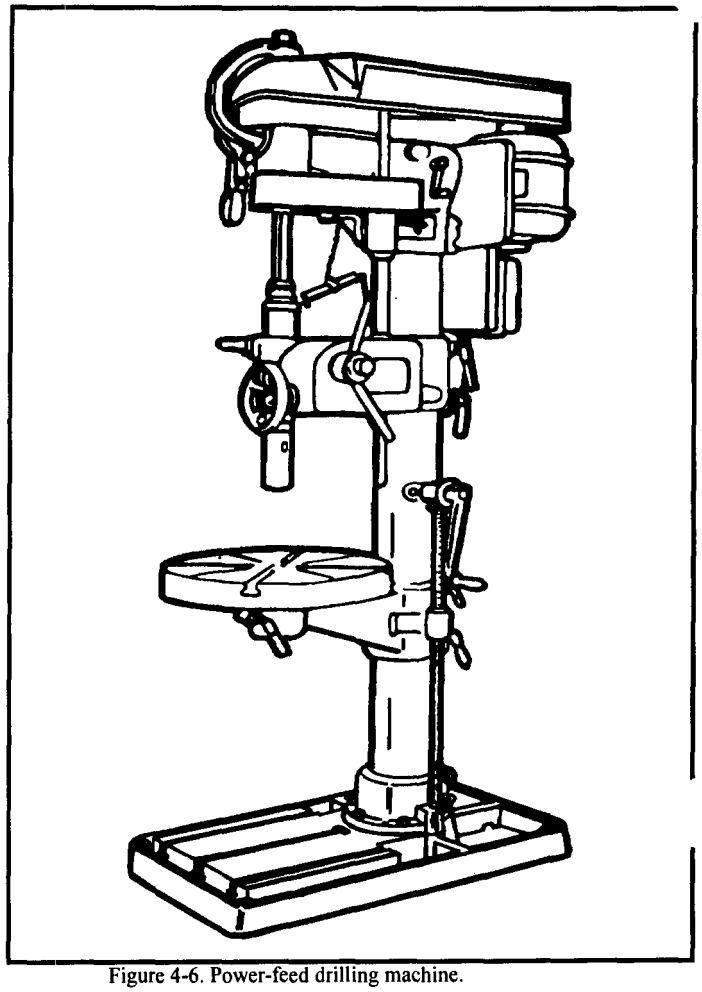

Figure 4-6. Power-feed drilling machine.

SAFETY PRECAUTIONS

GENERAL

Drilling machines have some special safety precautions that are in addition to those listed in Chapter 1.

DRILLING MACHINE SAFETY

Drilling machines are one of the most dangerous hand operated pieces of equipment in the shop area. Following safety procedures during drilling operations will help eliminate accidents, loss of time, and materials. Listed below are safety procedures common to most types of drilling machines found in the machine shop.

- Do not support the workplaces by hand. Use a holding device to prevent the workpiece from being tom from the operator's hand.
- Never make any adjustments while the machine is operating.
- Never clean away chips with your hand. Use a brush.
- Keep all loose clothing away from turning tools.
- Make sure that the cutting tools are running straight before starting the operation.

- Never place tools or equipment on the drilling tables.
- Keep all guards in place while operating.
- Ease up on the feed as the drill breaks through the work to avoid damaged tools or workplaces.
- Remove all chuck keys and wrenches before operating.
- Always wear eye protection while operating any drilling machines.

TOOLS AND EQUIPMENT

TWIST DRILLS

Twist drills are the most common cutting tools used with drilling machines. Twist drills are designed to make round holes quickly and accurately in all materials. They are called twist drills mainly because of the helical flutes or grooves that wind around the body from the point to the neck of the drill and appear to be twisted (Figure 4-7). Twist drills are simply constructed but designed very tough to withstand the high torque of turning, the downward pressure on the drill, and the high heat generated by friction.

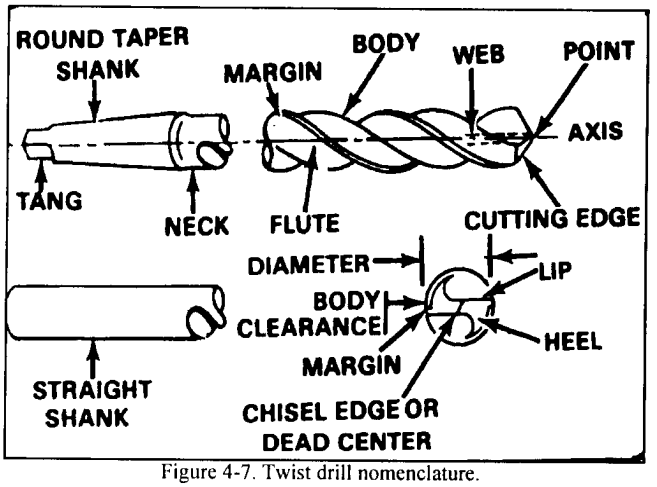

Figure 4-7. Twist drill nomenclature.

There are two common types of twist drills, high-speed steel drills, and carbide-tipped drills. The most common type used for field and maintenance shop work is the high-speed steel twist drill because of its low cost. Carbide-tipped metal drills are used in production work where the drill must remain sharp for extended periods, such as in a numerically controlled drilling machine. Other types of drills available are: carbide tipped masonry drills, solid carbide drills, TiN coated drills, parabolic drills and split point drills. Twist drills are classified as straight shank or tapered shank (Figure 4-7). Straight shank twist drills are usually 1/2-inch or smaller and tit into geared drill chucks, while tapered shank drills are usually for the larger drills that need more strength which is provided by the taper socket chucks.

Common twist drill sizes range from 0.0135 (wire gage size No. 80) to 3.500 inches in diameter. Larger holes are cut by special drills that are not considered as twist drills. The standard sizes used in the United States are the wire gage numbered drills, letter drills, fractional drills, and metric drills (See Table 4-1, in Appendix A). Twist drills can also be classified by the diameter and length of the shank and by the length of the fluted portion of the twist drill.

Wire gage twist drills and letter twist drills are generally used where other than standard fractional sizes are required, such as drilling holes for tapping. In this case, the drilled hole forms the minor diameter of the thread to be cut, and the major diameter which is cut by tapping corresponds to the common fractional size of the screw. Wire gage twist drills range from the smallest to the largest size; from No 80 (0.01 35 inch) to No 1 (0.2280 inch). The larger the number, the smaller the diameter of the drill. Letter size twist drills range from A (0.234 inch) to Z (0.413 inch). As the letters progress, the diameters become larger.

Fractional drills range from 1/64 to 1 3/4 inches in l/64-inch units; from 1/32 to 2 1/4 inches in 1/32-inch units, and from 1/1 6 to 3 1/2 inches in 1/16-inch units.

Metric twist drills are ranged in three ways: miniature set, straight shank, and taper shank. Miniature metric drill sets range from 0.04 mm to 0.99 mm in units of 0.01 mm. Straight shank metric drills range from 0.05 mm to 20.0 mm in units from 0.02 mm to 0.05 mm depending on the size of the drill. Taper shank: drills range in size from 8 mm to 80 mm in units from 0.01 mm to 0.05 mm depending on the size of the drill.

The drill gage (Figure 4-8) is used to check the diameter size of a twist drill. The gage consists of a plate having a series of holes. These holes can be numbered, lettered, fractional, or metric-sized twist drills. The cutting end of the drill is placed into the hole to check the size. A micrometer can also be used to check the size of a twist drill by measuring over the margins of the drill (Figure 4-9). The smaller sizes of drills are not usually marked with the drill size or worn drills may have the drill size rubbed off, thus a drill gage or micrometer must be used to check the size.

It is important to know the parts of the twist drill for proper identification and sharpening (Figure 4-7).

The point is the entire conical shaped end of the drill containing the cutting edges and chisel edge.

The body is the part of the drill that is fluted and relieved.

The shank is the part that fits into the holding device, whether it is a straight shank or a tapered shank.

The chisel edge is the point at which the two lips meet. The chisel edge acts as a chisel when the drill is turning and cuts into the workpiece. The chisel edge must always be centered exactly on the drill's axis for accurate cutting action.

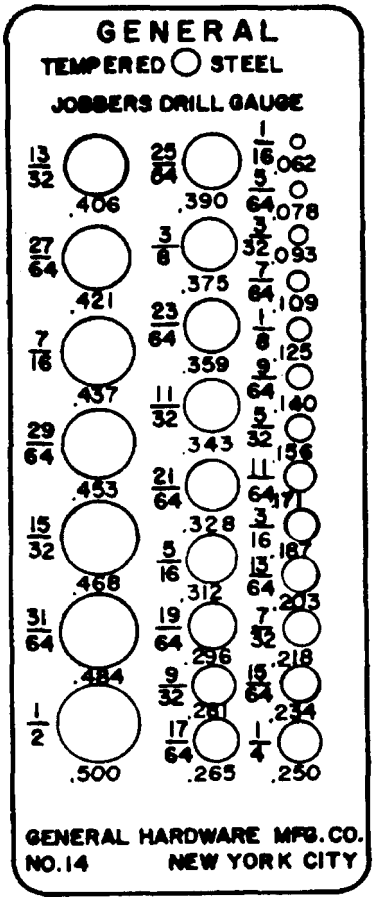

Figure 4-8. Drill gage.

The cutting edge lips cut like knives when fed and rotated into the workpiece. The lips are sharp edges formed by grinding the flutes to a conical point.

The heel is the conical shaped portion of the point in back of the cutting edge lips.

The amount of slope given to the heel in back of the drill lips is called lip clearance. This clearance is necessary to keep the heel from rubbing the bottom of the hole being drilled. Rubbing would prevent the drill from cutting.

The flute *is* the helical groove on the drill. It carries out the chips and admits coolant to the cutting edges.

The margin is the narrow surface along the flutes that determines the size of the drill and keeps the drill aligned.

The portion of the drill body that is relieved behind the margin is known as the body clearance. The diameter of this part is less than that of the margin and provides clearance so that all of the body does not rub against the side of the hole and cause friction. The body clearance also permits passage of lubricants around the drill.

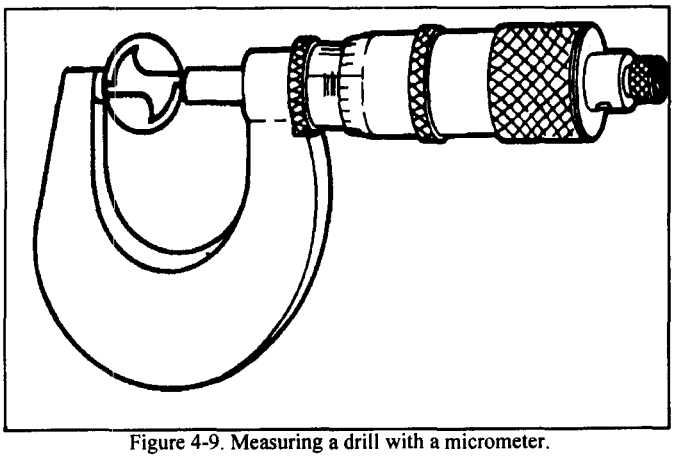

Figure 4-9. Measuring a drill with a micrometer.

The narrowed end of the tapered shank drill is called the tang. The tang fits the slot in the innermost end of the drill spindle, drill chuck, or other drill holding device and aids in driving the tool. It also prevents the drill from slipping.

The web of the drill is the metal section separating the flutes. It runs the length of the body between the flutes. The web gradually increases in thickness toward the shank, increasing the rigidity of the drill.

An imaginary line through the center of the drill from end to end is the axis. The drill must rotate evenly about the axis at all times.

SPECIAL DRILLS

Special drills are needed for some applications that a normal general purpose drill cannot accomplish quickly or accurately. Special drills can be twist drill type, straight fluted type, or special fluted. Special drills can be known by the job that they are designed for, such as aircraft length drills, which have an extended shank. Special drills are usually used in. high-speed industrial operations. Other types of special drills are: left hand drill, Silver and Deming, spotting, slow spiral, fast spiral, half round, die, flat, and core drills. The general purpose high-speed drill, which is the common twist drill used for most field and maintenance shops, can be reground and adapted for most special drilling needs.

SHARPENING TWIST DRILLS

Twist drills become dull and must be resharpened. The preferred method of resharpening a twist drill is with the drill grinding machine, but this machine is not always available in field and maintenance units, so the offhand method of drill sharpening must be used (Figure 4-10). The off hand method requires that the operator have a knowledge of the drilling geometry (Figure 4-11) and how to change drill angles as needed for any drilling job (see Table 4-2 in Appendix A).

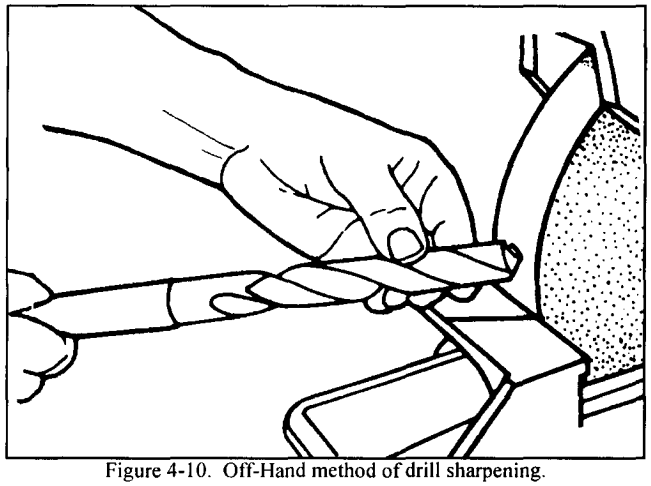

Figure 4-10. Off-Hand method of drill sharpening.

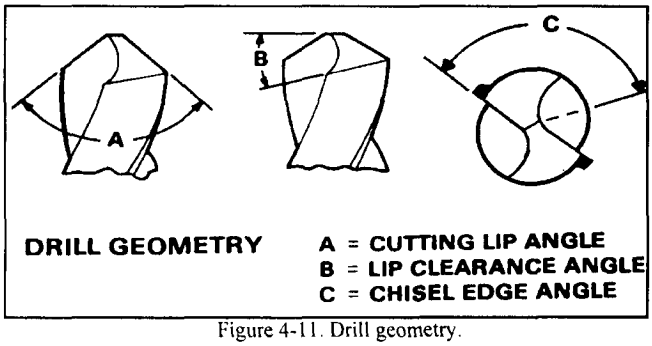

Figure 4-11. Drill geometry.

Tools needed are a utility or bench grinder with a dressed wheel and a drill point gage (Figure 4-12) or protractor head on the combination square. The drill point gage is set at 59° and adjusted along the steel rule to fit the drill to be sharpened. The cutting lips must be of the same angle, the lip clearance angle must be within a specific degree range, and the cutting lips must be of an equal length. There are several basic characteristics that all twist drills must have to cut properly. The following will cover those characteristics.

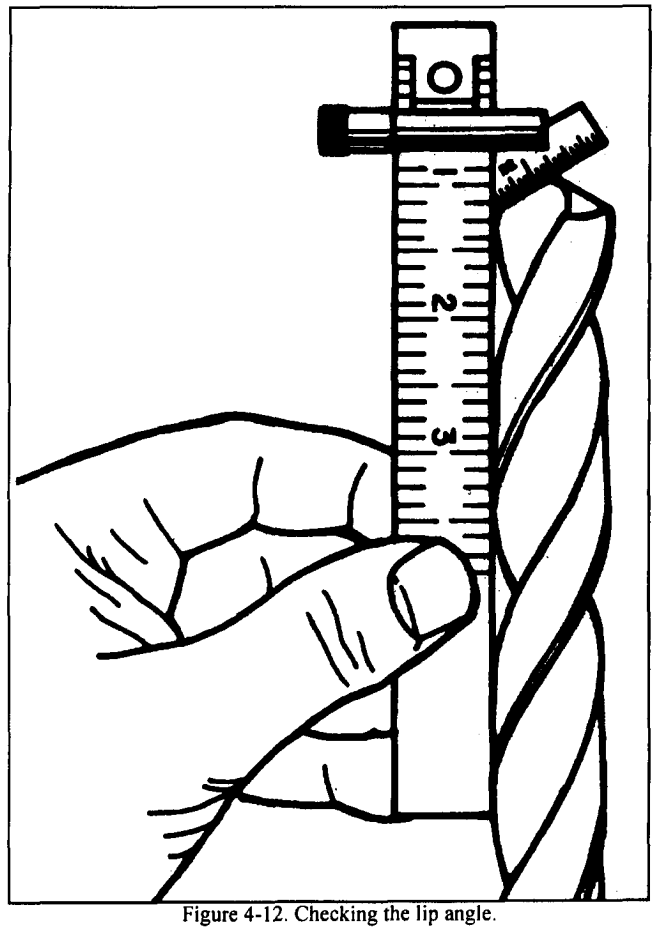

Figure 4-12. Checking the lip angle.

PRECHECK

Before sharpening a twist drill, the operator must check the condition of the drill for chipped and cracked lips or edges that must be ground off during the sharpening process. The operator must also check the references for the proper lip angle and lip clearance angle for the material to be drilled. After setting up the bench grinder for offhand drill sharpening, the operator assumes a comfortable stance in front of the grinding wheel to sharpen the twist drill. The suggested method is to grind the lip angle first, then concentrate on grinding the lip clearance angle, which will then determine the lip length. The usual lip angle is an included angle of 118° (59° x 2) (Figure 4-13), which is the lip angle of general purpose drills. Use the drill point gage frequently to check lip angle and lip length. When grinding, do not allow the drill to become overheated. Overheating will cause the drill edges to become blue which is an indication that the drill's temper has been lost. The blue area must be ground completely away to reestablish the drill's temper. If a drill becomes too hot during sharpening, the lips can crack when dipped into cold water or coolant.

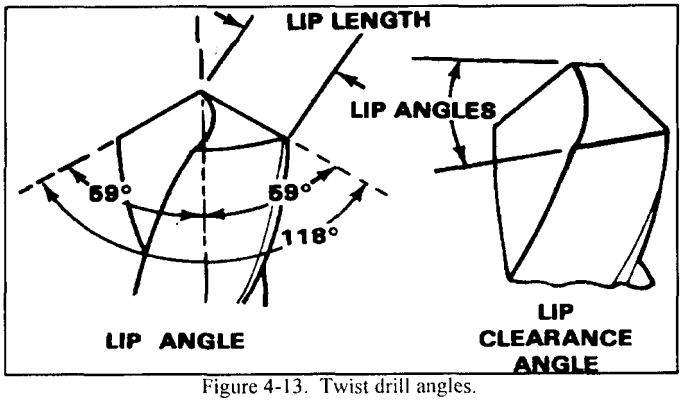

Figure 4-13. Twist drill angles.

DRILL POINT

When grinding the lip angle, use the drill point gage and grind one lip perfectly straight and at the required angle (usually 590). Then flip the drill over and grind the other lip. Once the angle is established, then the lip clearance angle and lip length can be ground. If both lips are not straight and of the same angle, then the chisel edge (Figure 4-14) will not be established. It is it important to have a sharp and centered chisel edge or the drill will not rotate exactly on its center and the hole will be oversized. If the drill point is too flat, it will not center properly on the workpiece. If the drill point is too steep, the drill will require more power and cut slowly. When the angles of the cutting lips are different, then the drill will only have one lip cutting as it revolves. The hole will be oversized and the drill will wear very rapidly.

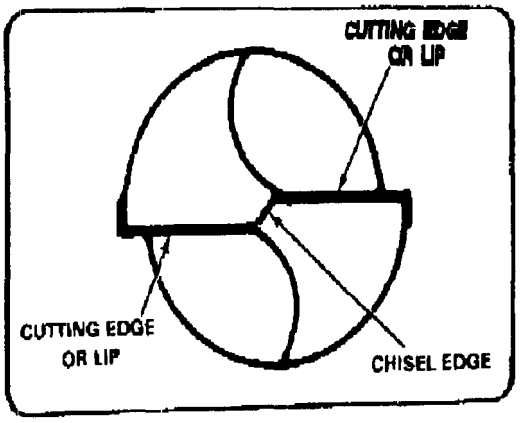

Figure 4-14. The drill point.

When both the angles and the length of the angles are incorrect, then excessive wear is put on both the drill and machine, which will result in poor workmanship (Figure 4-15).

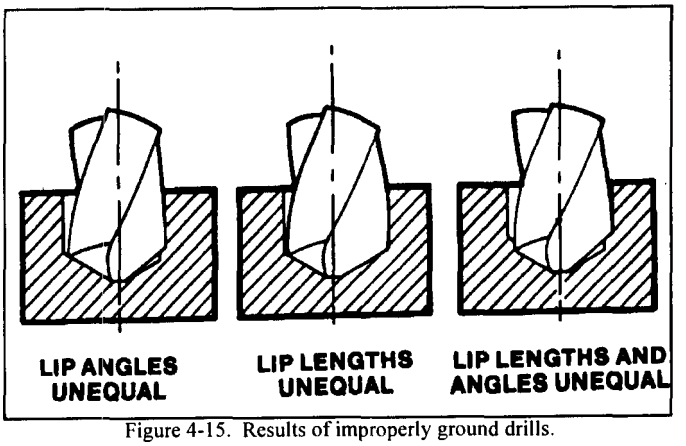

Figure 4-15. Results of improperly ground drills.

CLEARANCE ANGLE

When grinding the lip clearance angle, (Figure 4-13), relief must be given to both cutting edges allowing them to enter into the workpiece to do the cutting. General purpose drills have a clearance of 8° to 12°. The chisel edge of a correctly ground drill should be at an angle of about 45° with the line of the cutting edges. The angle of the chisel edge to the lips is a guide to the clearance (Figure 4-16). Too much clearance will cause the drill to break down because of insufficient support of the lip, and there will not be enough lip thickness to carry away the generated heat.

Too little clearance will result in the drill having little or no cutting edges, and the increased pressure required to feed it into the hole will cause the drill to break. By looking straight onto the cutting tip of the drill, the operator can see if the chisel edge is correct. If the chisel edge is correct at 45° to the

lips, then it is an indication that the lip clearance angle is correct. An incorrect chisel edge is usually produced by holding the drill at an incorrect angle to the wheel (Figure 4-17) when grinding. A good guide is to hold the drill parallel to the ground, and make slight adjustments.

RAKE ANGLE

The angle between the flute and the axis of the drill that forms the cutting edge is known as the rake angle (Figure 4-18). Generally, the rake angle is between 180 and 450, with 30° being the most common. Drills used on armor plate or other very hard materials need a reduced rake angle to increase the support behind the cutting edge. Soft materials, like brass and bronze, also use a reduced rake angle to prevent the drill from grabbing. The rake angle partially governs the tightness with which the chips curl and the amount of space they occupy. If the rake angle is too small, the lips may be too thin and break under the strain of drilling. Too large of a rake angle makes the drill chatter and vibrate excessively.

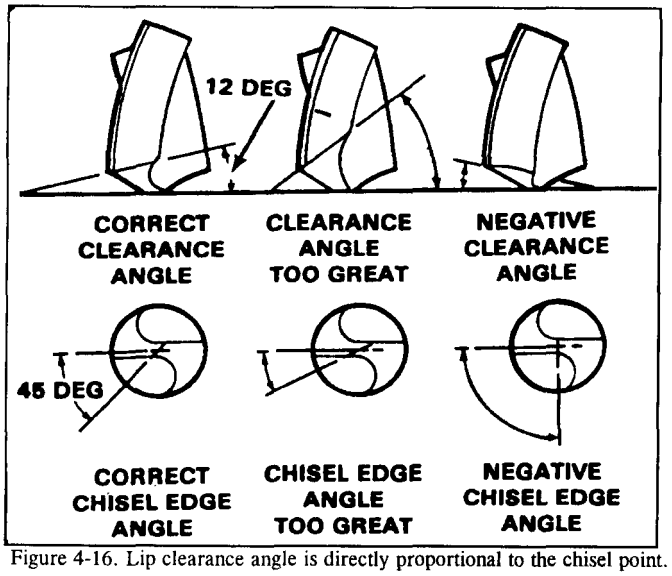

Figure 4-16. Lip clearance angle is directly proportional to the chisel point.

The web of a drill is made thicker toward the shank to strengthen the tool. In smaller size drills, the difference is not noticeable, but in larger drills, when the point is ground back by repeated sharpening, the thickness of the web becomes greater and the chisel edge of the drill becomes wider. This causes the chisel edge to scrape on the bottom of the hole and requires excessive pressure to be applied to the drill. This can be corrected by thinning the web (Figure 4-19). The point is ground thinner on a thin grinding wheel with a rounded face to fit into the flute. An equal amount of metal should be ground from each flute. The web should not be ground too thin as this may weaken the web and cause the drill to split in the middle.

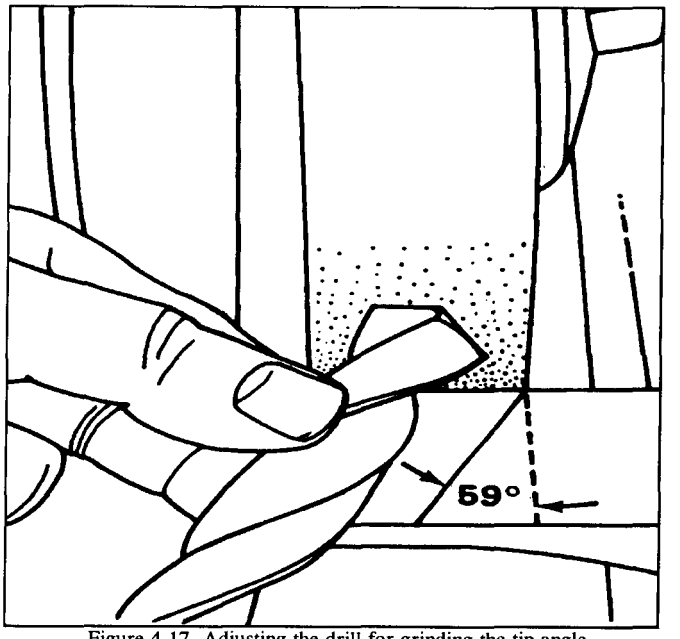

Figure 4-17. Adjusting the drill for grinding the tip angle.

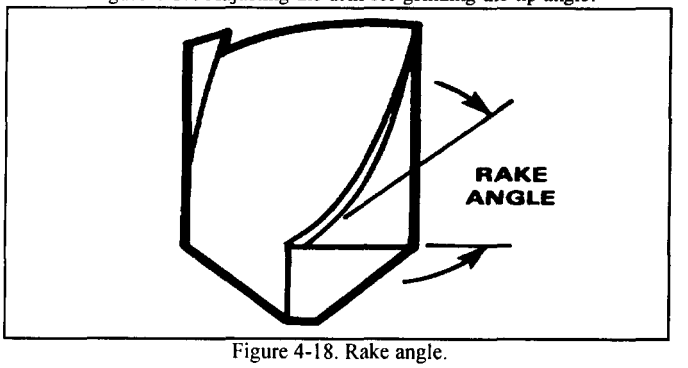

Figure 4-18. Rake angle.

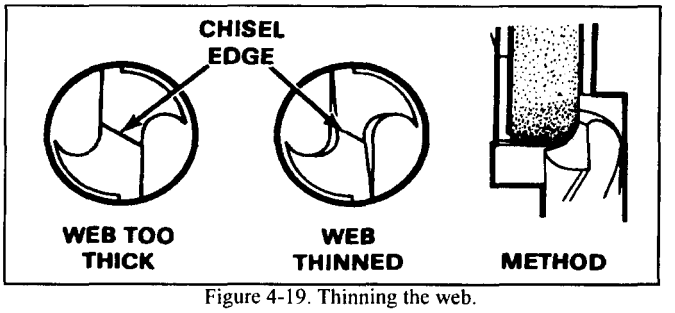

Figure 4-19. Thinning the web.

DRILL GRINDING MACHINES

Drill grinding machines (Figure 4-20) make the accurate grinding of all types and sizes of drills an easy job. Comparatively little skill is required to sharpen drills with these machines while following the operating instructions.

They are particularly valuable when a large number of the same general type of drills are to be sharpened. Two basic designs for the bench-type drill grinding machines are available. Both perform the same operations but use different drill holding devices. The capacity of these machines is stated in the horsepower of the electric motor and the sizes of drills which can be accommodated by the drill holding devices.

SINGLE WHEEL FIXTURE

One kind of bench-type drill grinding machine consists of an electric motor, a grinding abrasive wheel attached to the motor shaft, and fixtures to hold and position all types of twist drills for drill grinding. A web thinning drill grinding attachment, drill holder assembly, and swinging arm hold the drill in a fixed position for each grinding operation and permit the cutting edge lips to be ground symmetrically at the correct angle and with the correct clearance to ensure long life and efficient cutting. Collets and bushings are supplied with the drill grinding machine to hold a wide range of different sized drills. The grinding machine has a diamond set in the wheel-dressing arm to dress the grinding wheel as necessary.

DOUBLE WHEEL SWING ARM

Another kind of bench type drill grinding machine is equipped with two grinding abrasive wheels, one at each end of the motor shaft. One wheel is beveled for thinning the web of the drill at the point. The other wheel is used for lip grinding. The grinder includes a wheel holder assembly for mounting the drill and providing a means for bringing the drill into contact with the grinding wheel at the correct angle and feed to obtain proper clearance angles. A thinning drill point rest is mounted forward of the beveled grinding abrasive wheel to rest and guide the drill during web thinning operations. A wheel dresser is provided to dress the grinding wheel as necessary.

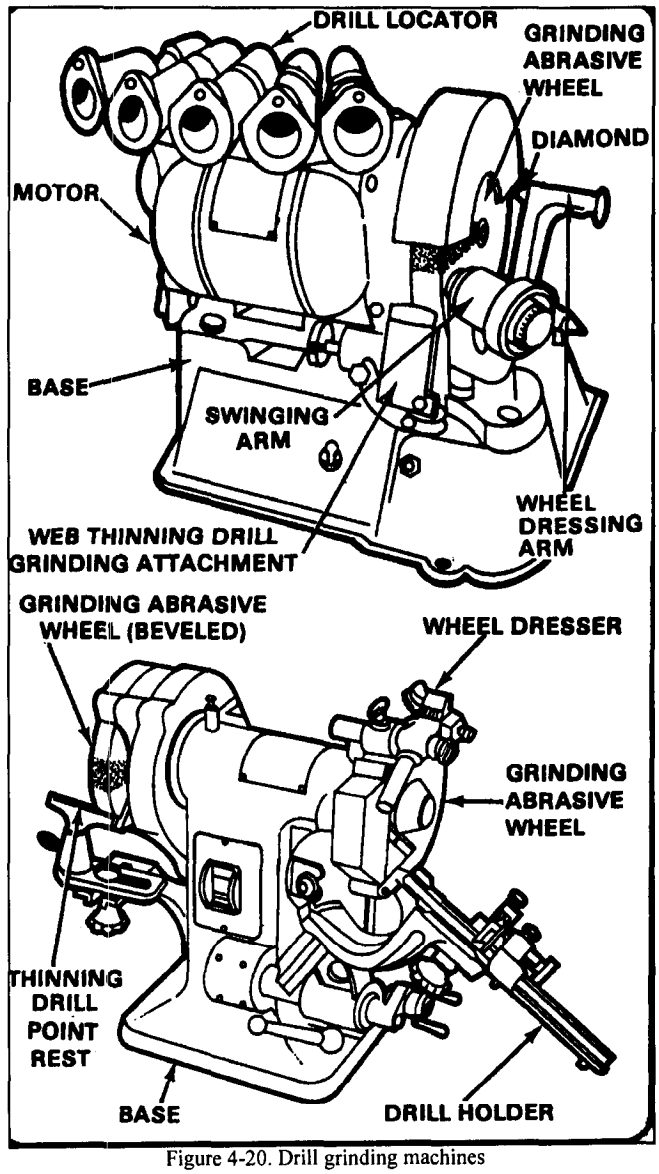

Figure 4-20. Drill grinding machines

OTHER TYPES OF CUTTERS

Drilling machines use cutters, that are not drills, to produce special holes. Below are listed the most common types.

COUNTERSINKS

Countersinks (Figure 4-21) are special angled cutters used to countersink holes for flathead screws so they are flush with the surface when mounted. The most common countersinks are cone shaped with angles of 82°. Cone angles of 60°, 90°,100°,110°, and 120° are for special needs.

COUNTERBORES

Counterbores (Figure 4-21) are special cutters that use a pilot to guide the cutting action to enlarge a portion of a hole. Common uses are for enlarging a hole to make a bolt head fit flush with the surface.

COMBINED COUNTERSINK AND CENTER DRILL

This special drilling tool (Figure 4-21) is used to start holes accurately. These tools are mainly used to center drill and countersink the end of round stock in a lathe machine.

REAMERS

Reamers (Figure 4-21) are cutting tools that are used to enlarge a drilled hole by a few thousandths of an inch for a precise fit.

BORING TOOLS

Boring tools (Figure 4-21) are not usually considered with drilling, but they can be used to bore a hole using the power-feed drilling machines. These tools consist of an arbor with a tool bit attached that cuts a preset sized hole according to the distance that the tool bit protrudes from the arbor.

FIELD EXPEDIENT CUTTERS

Under battlefield conditions, the exact tools may not be available for each job. Simple flat drills can be made quickly from a high-speed steel lathe tool bit or a drill blank. If a grinder is available, then a crude drill can be ground that has a point and two flat edges, which could produce a hole if enough pressure is applied and the workpiece is machinable.

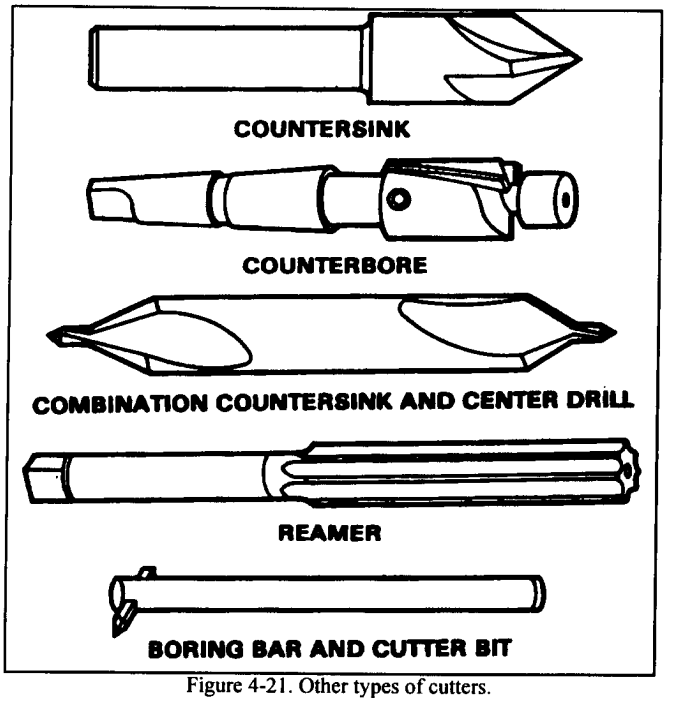

Figure 4-21. Other types of cutters.

TAP AND DIE WORK

Hand tapping and hand die work can be done on a drilling machine. The drill chuck is used to align the tap or die.

DRILL HOLDING DEVICES

The revolving vertical spindle of the drilling machine holds and drives the cutting tool. In order to use various sizes and shapes of drills in various machines three types of drill holding devices, which fit the spindle of the drilling machines, are used: the geared drill chuck, the drill sleeve, and the drill socket (Figure 4-22). The larger drilling machines have a spindle that has a standard Morse taper at the bottom end. There are three types of drill holding devices: the geared drill chuck, the drill sleeve, and the drill socket.

GEARED DRILL CHUCKS

Drills with straight shanks are held in geared drill chucks which have three adjustable jaws to clamp onto the drill. Smaller size drills are made with straight shanks because of the extra cost of providing these sizes if tapered. Geared drill chucks come in various sizes, with the 3/8 or 1/2-inch capacity chuck being the most common. The shank of the chuck is set into the spindle of the drilling machine by inserting the chuck's shank into the spindle's internal taper and seating the shank into the taper with a light blow with a soft hammer. Both the internal and external taper surfaces must be clean and free of chips for the shank to seat and lock properly. The drill is locked into the chuck by using the chuck key to simultaneously tighten the three chuck jaws. Geared drill chucks can also come with a morse tapered shank and may have a different method of attaching They may screw on, have a Jarno taper, or a Jacob's back taper.

DRILL SOCKETS AND DRILL SLEEVES

Morse taper shank drills come in several sizes, thus, adapters must be used for mounting them into various drilling machine spindles. Drill sleeves and drill sockets are designed to add to or subtract from the Morse taper for fitting a drill into the chuck spindle. For example, it is common for a 3/4 inch twist

drill to have a Morse taper of size #2, #3, or #4. It is also common for a drilling machine spindle to have a Morse taper of size #3 or #4, and it can be adapted for many other Morse taper sizes, depending on the size of the drill.

A drill too small for the machine spindle may be fitted into a socket or sleeve which has a taper hole of the proper size to hold the drill and a taper shank of the proper size to fit the drill spindle. Sometimes, more than one socket or sleeve is needed to build up the shank to tit into the drilling machine spindle. Sockets and sleeves may be obtained in a number of different sizes and hole shank taper combinations. Sockets, sleeves, and taper shank drills are mounted into the aligning slots of the spindle and lightly tapped with a sotf hammer to seat in place.

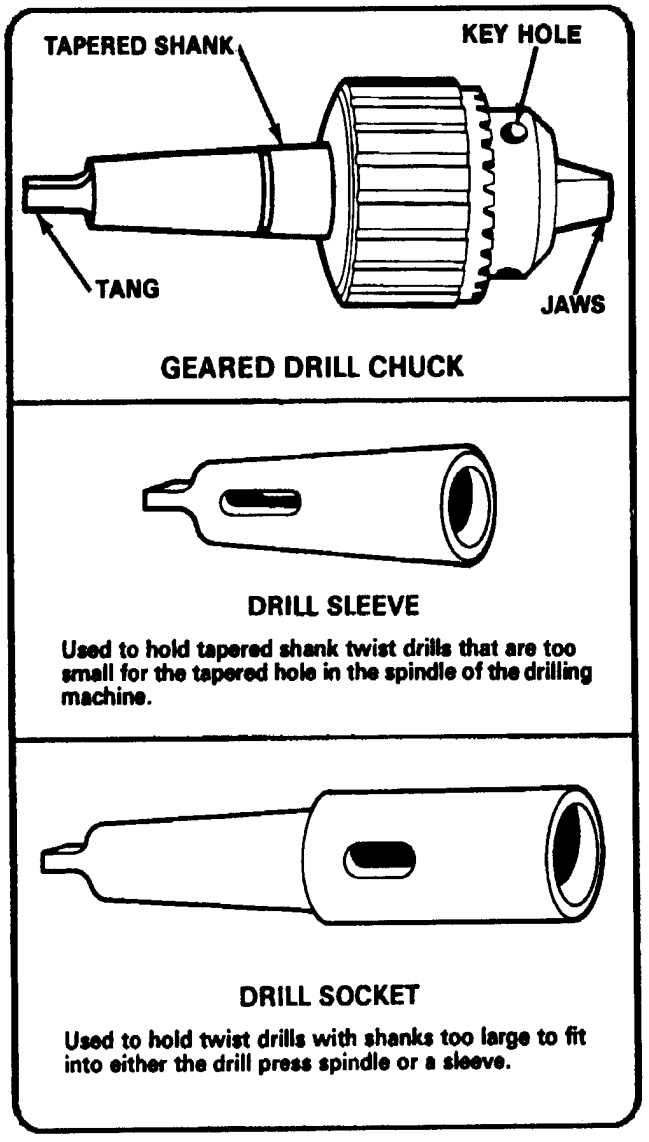

Figure 4-22 .Drill holding devices.

DRILL DRIFTS

Drill drifts are flat, tapered keys with one rounded edge that are designed to fit into a spindle chuck's slot to force a tapered shank drill loose. The rounded top of the small end of the drill drift is designed to face upward while inserting the drift into the slot. There are two types of drill drifts, the standard type and the safety type (Figure 4-23). The standard drift must be inserted into the chuck's slot and then struck with a soft hammer to jar the taper shank drill loose. The drill will fall quickly if not held by the hand and could break or cause injury. The safety drill drift has a sliding hammer weight on the drift itself to allow for a free hand to stay constantly on the drill as it comes loose.

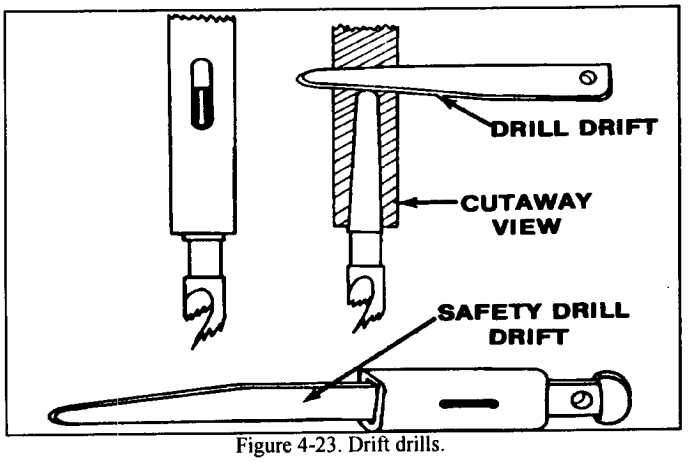

Figure 4-23. Drift drills.

WORK HOLDING AND DRILLING DEVICES

Work holding devices are used to hold the work steady for an accurate hole to be drilled, and so a safe drilling operation can be accomplished. Drilling support devices are used to keep the workpiece above the worktable or vise surface and to keep the workpiece aligned for drilling. Some devices are fairly simple and are used for drilling operations that do not require a perfect hole. Other devices are very intricate and designed for more accurate drilling. Many work holding devices are used with one another to produce the most stable work setup for drilling.

MACHINE TABLE VISES

A machine table vise is equipped with jaws which clamp against the workpiece, holding it secure. The vise can be bolted to the drilling table or the tail can be swung around to lay against the column to hold itself steady. Below are listed many types of special purpose machine table vises available to machine operators.

- The standard machine table vise is the simplest of all vises. It is equipped with two precision ground jaws for holding onto the work and a lead screw to tighten the one movable jaw to the work (Figure 4-24).

- The swivel vise is a machine vise that has an adjustable base that can swivel through 360° on a horizontal plane (Figure 4-24).

- The angle vise is very similar to the table vise. except this vise can be tilted to 90°. to be perpendicular to the work table (Figure 4-24).

- Many other vises are available. They include the compound vise. universal vise, magnetic vise, and contour vise.

STEP BLOCKS

These holding devices are built like stairs to allow for height adjustments in mounting drilling jobs and are used with strap clamps and long T-slot bolts (Figure 4-25).

CLAMPS

Clamps are small, portable vises or plates which bear against the workpiece and holding devices to steady the job. Clamps are made in numerous shapes to meet various work-holding needs. Common types of clamps are the C-clamp, the parallel clamp, the machine strap clamp, the bent-tail machine clamp, the U-clamp, and the finger machine clamp (Figure 4-25).

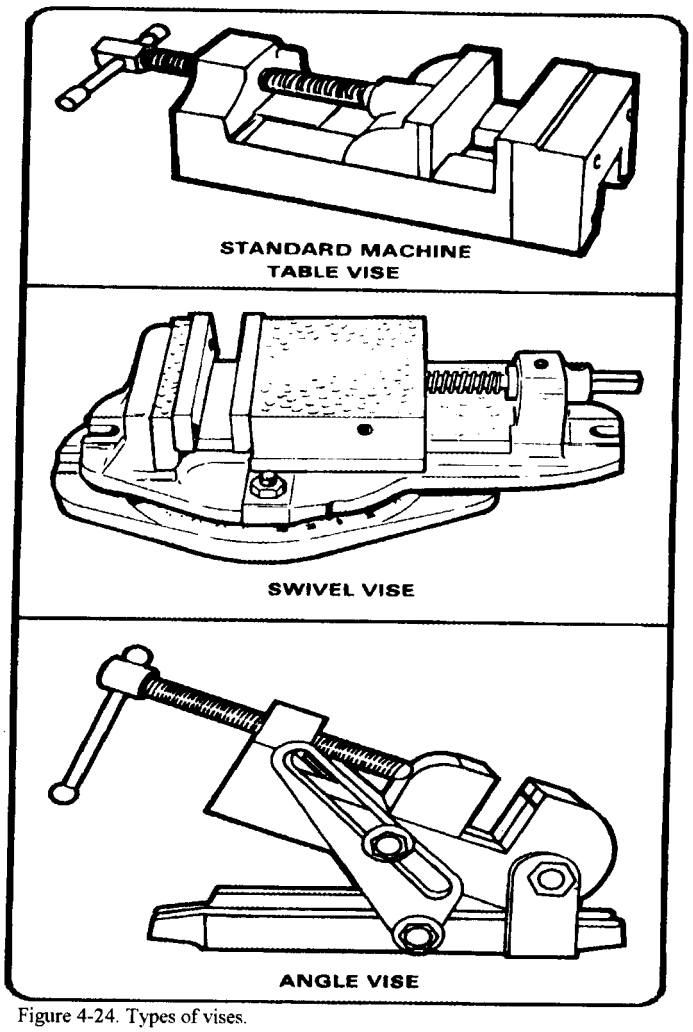

Figure 4-24. Types of vises.

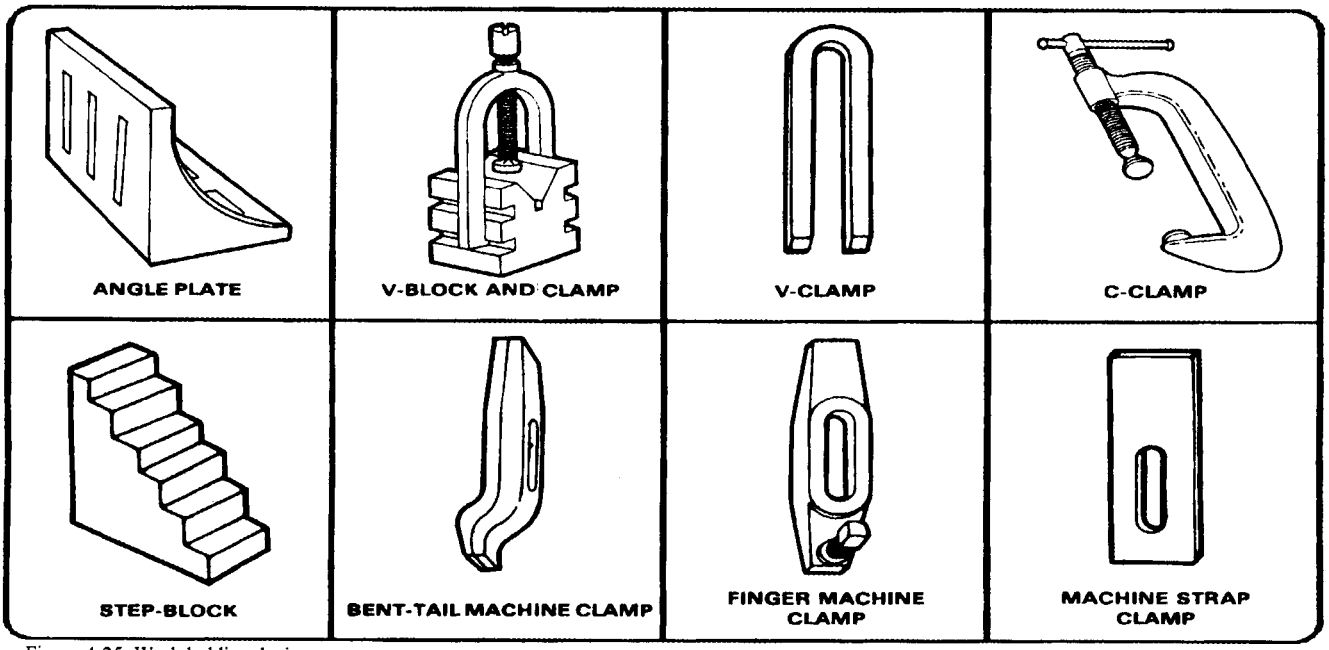

Figure 4-25. Work holding devices.

V-BLOCKS

V-blocks are precision made blocks with special slots made to anchor clamps that hold workplaces. The V-slot of the block is designed to hold round workplaces. The V-block and clamp set is usually used to hold and drill round stock.

ANGLE PLATES

Angle plates are made in a 900 angle with slots and bolt holes for securing work to the table or to other work holding devices (Figure 4-25).

T-SLOT BOLTS

These specially made bolts have a Tshaped head that is designed to slide into the T-slots of the drilling machine's worktable. A heavy duty washer and nut are used with the T-bolt to secure the work.

JIGS

Drill jigs are devices designed for production drilling jobs. The workplaces are clamped into the jig so that the holes will be drilled in the same location on each piece. The jig may guide the drill through a steel bushing to locate the holes accurately.

DRILLING SUPPORT DEVICES

These devices are important to keep the workpiece parallel while being supported above the worktable or vise surface and to keep the drill from cutting into the holding device or worktable. The following two devices are the most common used.

- Blocks are used with clamps to aid in securing and supporting the work. These blocks are usually precision ground of hard steel for long life.
- Parallels are precision ground rectangular bars are used to keep the workpiece parallel with the worktable when the workpiece must be raised above the worktable surface, such as when drilling completely through a workpiece (Figure 4-26). Parallels come in matched sets and can be solid or adjustable as needed.

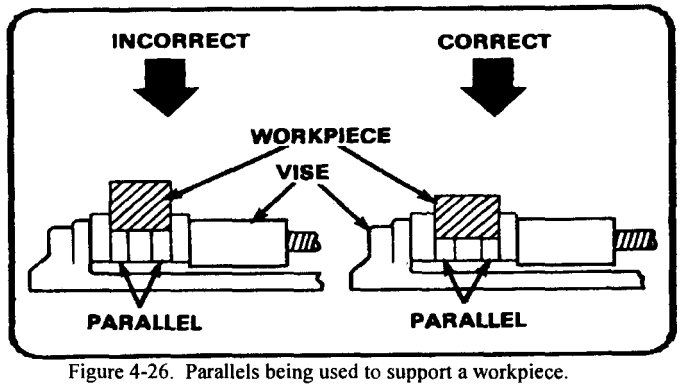

Figure 4-26. Parallels being used to support a workpiece.

CUTTING FLUIDS

Cutting fluids, lubricants, and coolants are used in drilling work to lubricate the chip being formed for easier removal, to help dissipate the high heat caused by friction, to wash away the chips, to improve the finish, and to permit greater cutting speeds for best efficiency. In drilling work, the cutting fluid can be sprayed, dripped, or machine pumped onto the work and cutting too! to cool the action and provide for maximum tool life. Drilling, reaming, and tapping of various materials can be improved by using the proper cutting fluids (see Table 4-3 in Appendix A). Cutting fluids can be produced from animal, vegetable, or mineral oils. Some cutting fluids are very versatile and can be used for any operation, while other cutting fluids are specially designed for only one particular metal.

LAYING OUT AND MOUNTING WORK

LAYING OUT WORK

Laying out work for drilling consists of locating and marking the exact centers of the holes to be drilled. The accuracy of the finished workpiece depends, in most part, on the accuracy of the layout. If the work does not require extreme accuracy, then laying out may be a simple operation, such as scribing two intersecting lines and center punching for drilling (Figure 4-27). For a precise layout, to within a few thousandths of an inch, precision layout procedures must be followed. Precision tools, such as a surface plate, surface gage, calipers, and sharp scribes must be used. The workpiece should be cleaned and deburred before applying layout dye.

LAYING OUT HOLE CENTERS

The position of the center of the hole to be drilled is marked by scribing two or more lines which intersect at the hole center. This intersecting point is then marked lightly with a prick punch and hammer. Check to see that the punch mark is exactly at the center of the intersection; use a magnifying glass if necessary. Use a pair of dividers, set to the radius of the hole to be drilled, to scribe a circle on the workpiece. The prick punch is then used to mark small indentations, known as "witness marks," on the circumference (Figure 4-27). This completes marking the circle. If a check is needed, have another circle scribed outside of the original circle, which can be checked for alignment after drilling (Figure 4-27).

Center-Punching the Layout

When all scribing is finished, enlarge the prick punch mark with a center punch to aid the center drilling process. Enlarging the mark with a center punch allows the center drill point to enter the workpiece easier and cut smoother.

Layout of Multiple Holes

When more than one hole must be drilled, lay out the holes along a common reference line, then put in the intersecting lines and scribe the circles. Throughout the layout process, avoid making the layout lines too heavy. Use lines as thin as possible, and avoid any scratches or other marks on the surface to be drilled.

MOUNTING WORKPIECES

Before attempting to use a drilling machine, some provision must be made for holding the workpiece rigidly and securely in place. The workpiece should always be firmly fastened to the table or base to produce holes that are located accurately. Use work holding devices to hold the workpiece (Figures 4-24 and 4-25). The two best methods to mount workplaces are explained below.

Vise Mounting

Most hand-feed drilling machines have no means of clamping or bolting workplaces to the table or base. The workpiece must be secured tightly in a machine table vise and swung around so that the tail of the vise contacts the column of the drill press. The hole must be centered by hand so that the center drill point is directly over the centerpunched mark. Other larger drilling machines have slotted tables and bases so that the work and work holding devices can be bolted or clamped firmly. All work should be securely clamped or set against a stop for all drilling to avoid letting the drill grab and damage the workpiece or injure the machine operator.

Table or Base Mounting

When a workpiece is table or base mounted (Figure 4-28), the strap clamps must be as parallel to the table or base as possible. All bolts and strap clamps should be as short as possible for rigidity and to provide for drilling clearance (Figure 4-29).

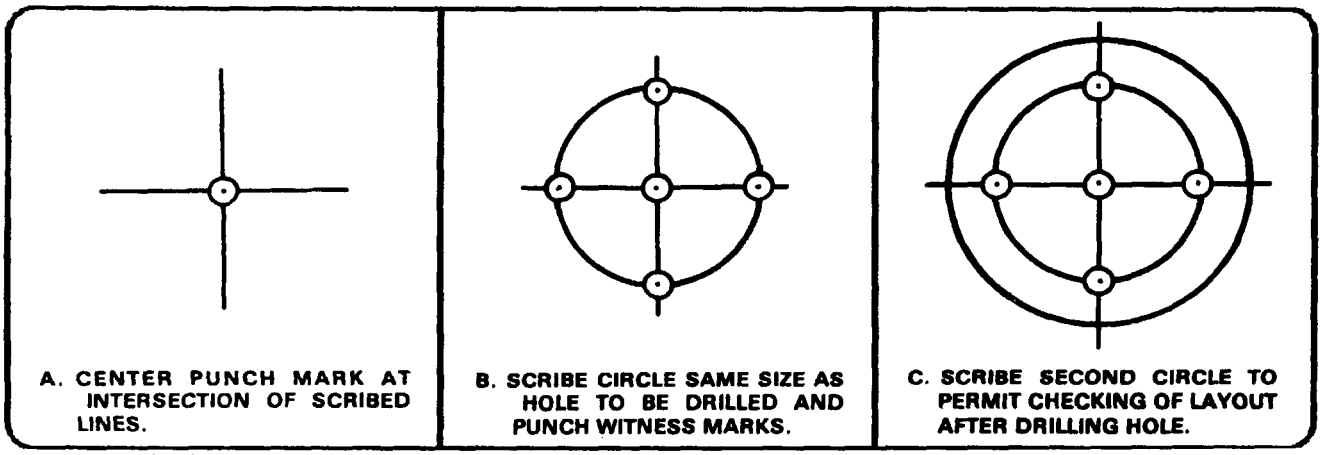

Figure 4-27. Use of "witnessess marks."

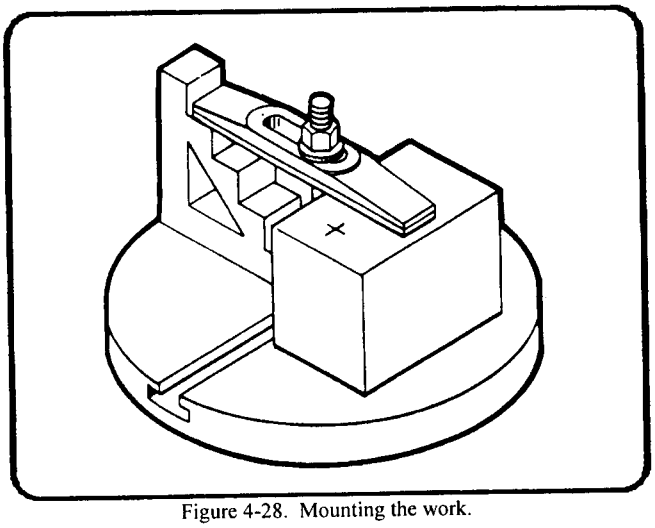

Figure 4-28. Mounting the work.

Parallel bars should be set close together to keep from bending the work. Washers and nuts should be in excellent condition. The slots and ways of the table, base, or vise must be free of all dirt and chips. All work holding devices should be free of burrs and wiped clean of oil and grease. Work holding devices should be the right size for the job. Devices that are too big or too small for the job are dangerous and must be avoided.

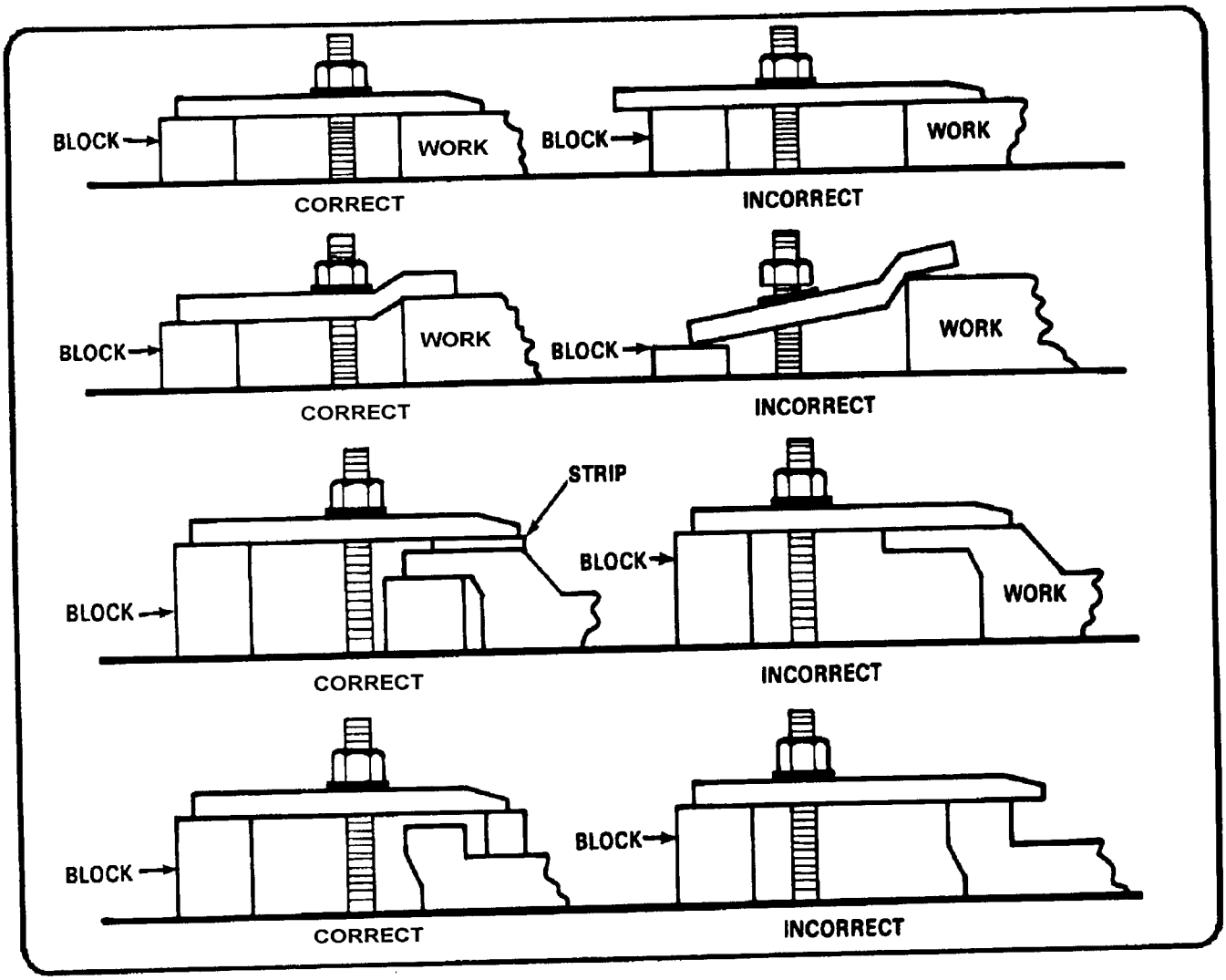

Figure 4-29. Correct and incorrect clamp applications.

GENERAL DRILLING OPERATIONS

THE DRILLING PROCESS

After a workpiece is laid out and properly mounted, the drilling process can begin. The drilling process, or complete operation, involves selecting the proper twist drill or cutter for the job, properly installing the drill into the machine spindle, setting the speed and feed, starting the hole on center, and drilling the hole to specifications within the prescribed tolerance. Tolerance is the allowable deviation from standard size. The drilling process must have some provisions for tolerance because of the oversizing that naturally occurs in drilling. Drilled holes are always slightly oversized, or slightly larger than the diameter of the drill's original designation. For instance, a 1/4-inch twist drill will produce a hole that may be several thousandths of an inch larger than 1/4-inch.

Oversizing is due to several factors that affect the drilling process: the actual size of the twist drill, the accuracy of the drill point, the accuracy of the machine chuck and sleeve, the accuracy and rigidity of the drilling machine spindle, the rigidity of the entire drilling machine, and the rigidity of the workpiece and setup. Field and maintenance shop drilling operations allow for some tolerance, but oversizing must be kept to the minimum by the machine operator.

Selecting the Drill

Selecting the proper twist drill means getting the right tool for the job (see Table 4-2 in Appendix A). The material to be drilled, the size of that material, and the size of the drilled hole must all be considered when selecting the drill. Also, the drill must have the proper lip angles and lip clearances for the job. The drill must be clean and free of any burrs or chips. The shank of the drill must also be clean and free of burrs to fit into the chuck. Most drills wear on the outer edges and on the chisel point, so these areas must be checked, and resharpened if needed, before drilling can begin. If the twist drill appears to be excessively worn, replace it.

Installing the Drill

Before installing the drill into the drilling machine spindle, clean the spindle socket and drill shank of all dirt, chips, and burrs. Use a small tile inside the socket to remove any tough burrs. Slip the tang of the drill or geared drill chuck into the sleeve and align the tang into the keyway slot (Figure 4-30).

Tap the end of the drill lightly with a soft hammer to seat firmly. Another method used to seat the drill into the sleeve is to place a block of wood on the machine table and force the drill down onto the block.

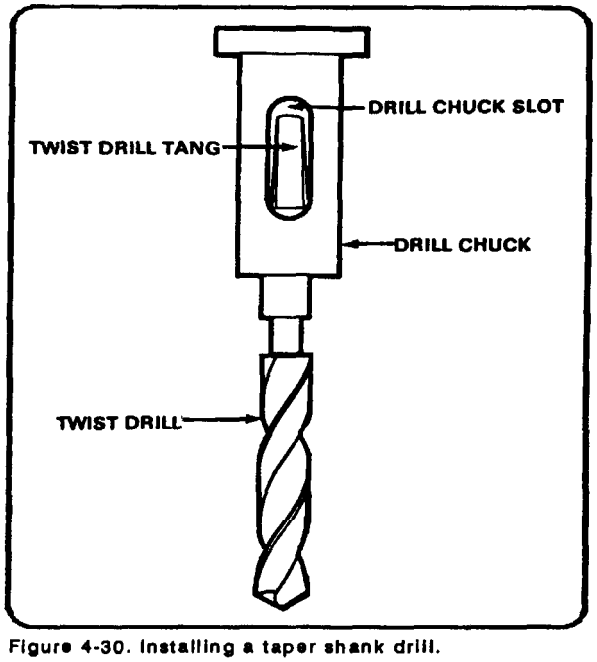

Figure 4-30. Installing a taper shank drill.

Selecting Drill Speed

Speed refers to the revolutions per minute (RPM) of the drilling machine spindle. For drilling, the spindle should rotate at a set speed that is selected for the material being drilled. Correct speeds are essential for satisfactory drilling. The speed at which a drill turns and cuts is called the peripheral speed. Peripheral speed is the speed of a drill at its circumference expressed in surface feet per minute (SFPM). This speed is related to the distance a drill would travel if rolled on its side. For example, a peripheral speed of 30 feet per minute means the drill would roll 30 feet in 1 minute if rolled on its side.

It has been determined through experience and experiment that various metals machine best at certain speeds; this best speed for any given metal is what is known as its cutting speed (CS) (see Table 4-2) in Appendix A. If the cutting speed of a material is known, then a simple formula can be used to find the recommended RPM of the twist drill.

The slower of the two recommended speeds is used for the following formulas due to the varying conditions that may exist, such as the rigidity of the setup, the size of the drilling machine, and the quality of finish.

$$\text{RPM} = \frac{\text{CSx4}}{\text{D}}$$

Where RPM = drill speed in revolutions per minute.

CS = Recommended cutting speed in surface feet per minute.

4 = A constant in all calculations for RPM (except metric).

D = The diameter of the drill itself.

For example, if a 1/2-inch (0.500-inch) twist drill is to cut aluminum, the formula would be setup as follows:

$$\text{RPM} = \frac{200 \text{ X } 4}{.500} = \frac{800}{.500} = 1600 \text{ RPM}$$

Thus, the drilling machine would be set up to drill as close to 1,600 RPM as possible. It is best to use the machine speed that is closest to the recommended RPM. When using the metric system of measurement, a different formula must be used to find RPM:

$$\text{RPM} = \frac{\text{CS (m) x 320}}{\text{D (mm)}}$$

Where RPM = Drill speed in revolutions per minute.

CS = Recommended cutting speed in surface meters per minute.

320 = A constant for all metric RPM calculations.

D = Diameter of the twist drill in millimeters.

For example, if a 15-mm twist drill is to cut medium-carbon steel, with a recommended cutting speed of 21.4 meters per minute, the formula would be set up as follows:

$$\text{RPM} = \frac{21.4 \text{ x}320}{15} = \frac{6848}{15}$$

$$\text{RPM} = \frac{21.4 \text{ x}320}{5} = \frac{6.848}{15} = 456.533 \text{ RPM or } 457 \text{ RPM}$$

Round this RPM up or down to the nearest machine speed.

The speeds on these tables are just recommendations and can be adjusted lower if needed, or to higher speeds if conditions permit.

SELECTING DRILL FEED

Feed is the distance a drill travels into the workpiece during each revolution of the spindle. It is expressed in thousandths of an inch or in millimeters. Hand-feed drilling machines have the feed regulated by the hand pressure of the operator; thus, the skill of the operator will determine the best feeds for drilling. Power feed drilling machines have the ability to feed the drill into the work at a preset depth of cut per spindle revolution, so the best feeding rate can be determined (see Table 4-4 in Appendix A).

The selection of the best feed depends upon the size of the drill, the material to be drilled, and the condition of the drilling machine. Feed should increase as the size of the drill increases. After starting the drill into the workpiece by hand, a lever on the power-feed drilling machine can be activated, which will then feed the drill into the work until stopped or disengaged. Too much feed will cause the drill to split; too little feed will cause chatter, dull the drill, and possibly harden the workpiece so it becomes more difficult to drill. Drills 1/2 inch or smaller can generally be hand-fed, while the larger drills require more downward torque and should be power-fed.

ALIGNING AND STARTING HOLES

To start a twist drill into the workpiece, the point of the drill must be aligned with the center-punched mark on the workpiece. Some drilling operations may not require a precise alignment of the drill to the work, so alignment can be done by lining up the drill by hand and eye alone. If a greater precision in centering alignment is required, than more preparation is needed before starting to drill.

STARTING HOLES WITH CENTER DRILL

The best method to align and start a hole is to use the combination countersink and drill, known as the center drill (Figure 4-31). Set the drilling machine speed for the diameter of the tip of the center drill, start the machine, and gently lower the center drill into contact with the work, using hand and eye coordination. The revolving center drill will find the center punched mark on the workpiece and properly align the hole for drilling. The depth of the center-drilled hole should be no deeper than two third the length of the tapered portion of the center drill.

DRAWING A DRILL BACK ON CENTER

Often, the drill will not be on center, sometimes due to a poorly made center-punched mark or a hard spot on the metal. To draw the twist drill back to the position desired (Figure 4-3 1), a sharp chisel is used to make one or more nicks or grooves on the side toward which the drill is to be drawn. The chisel marks will draw the drill over because of the tendency of the drill to follow the line of least resistance. After the chisel mark is made, the drill is again hand-fed into the work and checked for being on center. This operation must be completed before the drill point has enlarged the hole to full diameter or the surface of the workpiece will be marred by a double hole impression.

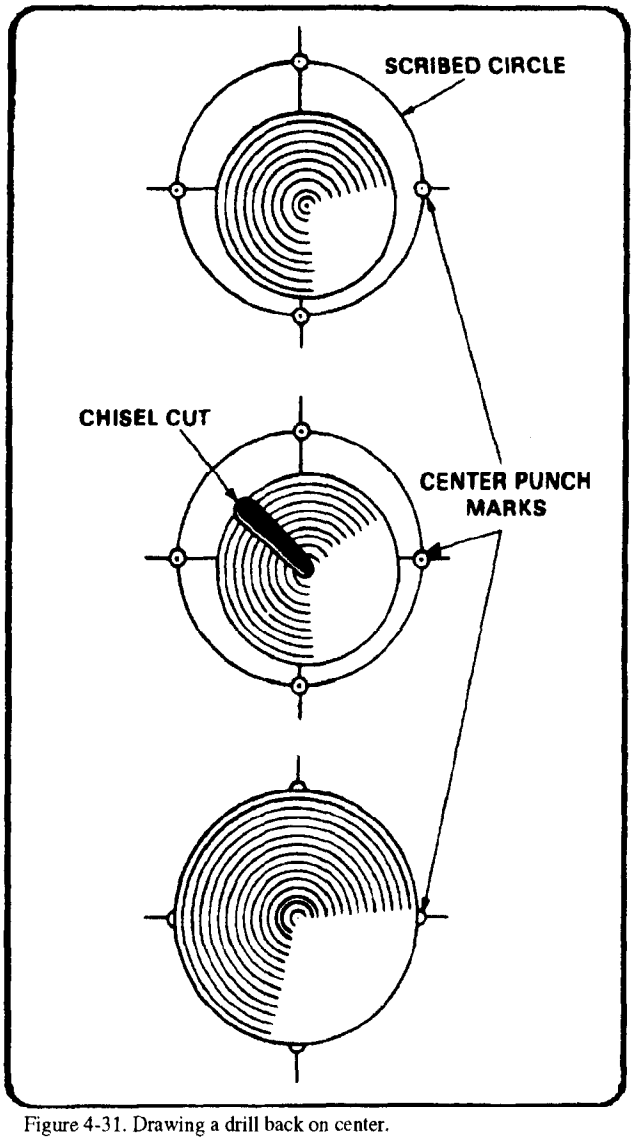

Figure 4-31. Drawing a drill back on center.

DRILLING

After the drill has been aligned and the hole started, then insert the proper size drill (Figure 4-32) and continue drilling into the workpiece (Figure 4-33), while applying cutting fluid. The cutting fluid to use will depend on what material is being machined (see Table 4-3 in Appendix A). Use the cutting fluids freely.

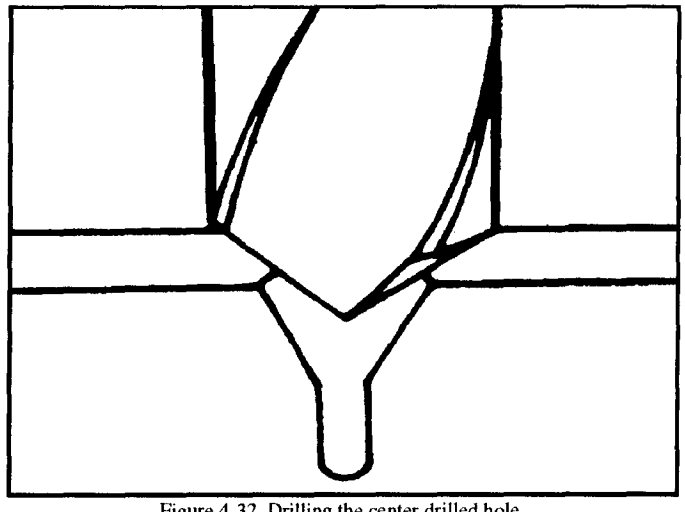

Figure 4-32. Drilling the center drilled hole.

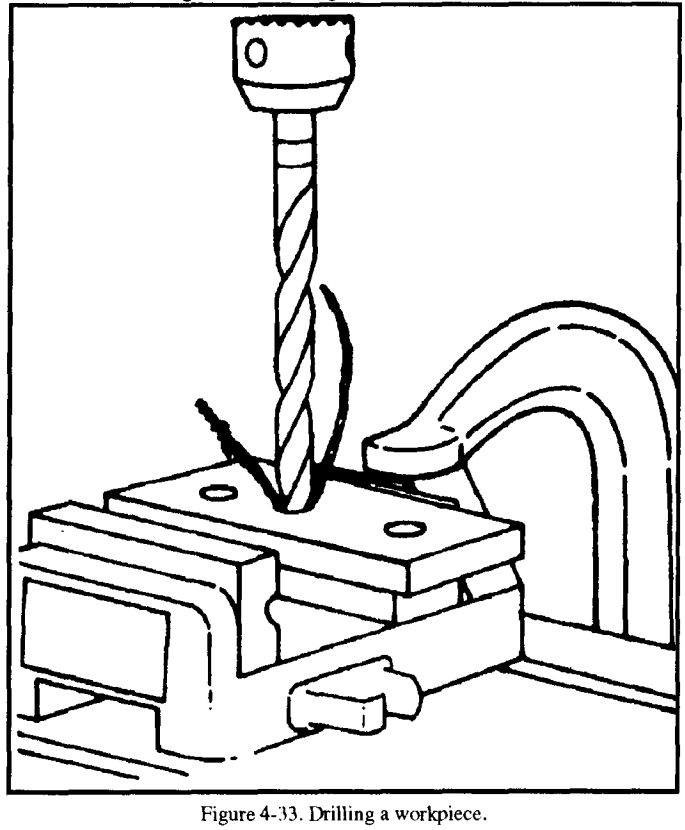

Figure 4-33. Drilling a workpiece.

Drilling Deep Holes

If the depth of the hole being drilled is greater than four times the diameter of the drill, remove the drill from the workpiece at frequent intervals to clean the chips from the flutes of the drill and the hole being drilled. A slight increasing speed and decrease in feed is often used to give the chips a greater freedom of movement. In deep hole drilling, the flutes of the smaller drills will clog up very quickly and cause the drill to drag in the hole, causing the diameter of the hole to become larger than the drill diameter. The larger drills have larger flutes which carry away chips easier.

When the depth of the hole being drilled is four times the diameter of the drill itself, remove the drill at frequent intervals and clean the chips from the flutes of the drill and from the hole being drilled.

Drilling a Pilot Hole

As the drill size increases, both the size of the web and the width of the chisel edge increase (Figure 4-34). The chisel edge of drill does not have a sharp cutting action, scraping rather than cutting occurs. In larger drills, this creates a considerable strain on the machine. To eliminate this strain when drilling a large hole, a pilot hole is drilled first (Figure 4-34) and then followed with the larger drill. A drill whose diameter is wider than the web thickness of the large drill is used for the pilot hole. This hole should be drilled accurately as the larger drill will follow the small hole.

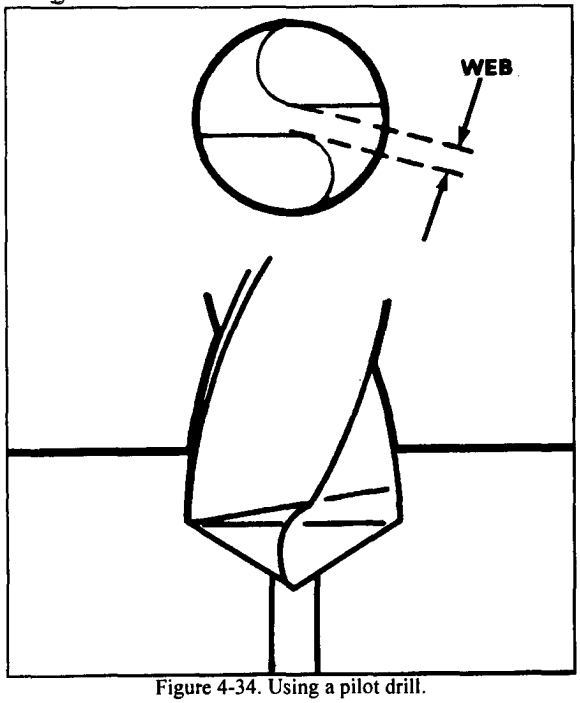

Figure 4-34. Using a pilot drill.

A pilot drill can also be used when average-sized holes are to be drilled on small drilling machines. The small machine may not have enough power to drive the larger drill through the metal. Avoid making the pilot drilled hole much wider than the web of the larger drill. Too wide of a pilot drilled hole may cause the larger drill cutting lips to grab and snag which may cause excessive chatter or an out-of-round hole.

Drilling Thin Material

When drilling thin workpieces, such as sheet metal, place another piece of metal or wood under the workpiece to provide support and prevent bending the workpiece or ruining the hole due to the upthrust created when the drill breaks through.

If thin metal must be drilled and a support cannot be rigged under the thin metal, then a drill designed for thin metal, such as a low helix drill with zero rake angle, commonly called a sheet metal drill, must be used.

Using a Depth Stop

The depth stop mechanism on the drilling machine (Figure 4-35) should be used whenever drilling to a desired depth, and to prevent the twist drill from traveling too far after cutting through the workpiece. The depth stop is designed to be used whenever a number of holes of the same depth are to be drilled, or when drilling holes deep into the workpiece (blind holes). Make sure that drills are chucked tightly to avoid slipping and changing the depth setting. Most depth stops have away to measure the distance that the drill travels. Some may have a fractional gage on the depth stop rod, and some may have a micrometer dial located on the depth stop for very precise measurements.

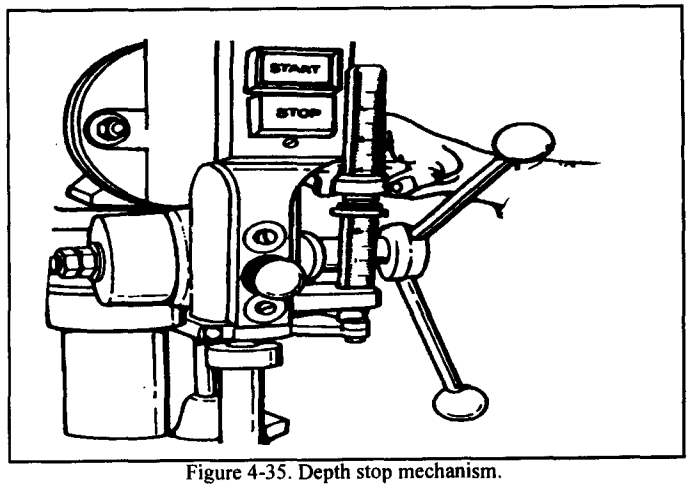

Figure 4-35. Depth stop mechanism.

Checking the Depth of Drilled Holes

To accurately check the depth of a drilled hole, the length of the sides of the hole must be measured. Do not measure from the bottom point of the hole (Figure 4-36). A thin depth gage is inserted into the hole, along the side, and the measurement taken. If the hole is too small for the gage to fit down into it then a twist drill of the same size as the hole can be inserted into the hole upside down, then removed and measured with a rule. Clean all chips and coolant from the holes before attempting any depth measurement.

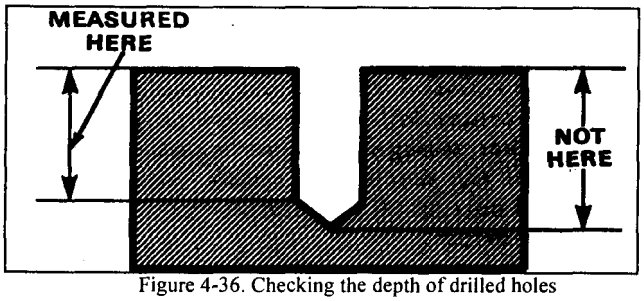

Figure 4-36. Checking the depth of drilled holes

Drilling Round Stock

When drilling shafts, rods, pipes, dowels, or other round stock, it is important to have the center punch mark aligned with the drill point (Figure 4-37). Use V-blocks to hold the round stock for center punching and drilling. Align the center of the round stock with a square or by lining the workpiece up with the twist drill point. Another method to drill round stock is to use a V-block drill jig that automatically centers the work for drilling.

Operational Checks

After the hole is drilled to specifications, always back the drill out of the hole and shut off the machine. Allowing a drill to run on in the hole will cause the hole to be oversized. At any time during the drilling process, a problem could occur. If so, it should be fixed as soon as possible to avoid any damage or injury. Operators must observe the drilling machine for any excessive vibration or wobble, overheating of the electric motor, and unusual noises coming from the machine. A high pitched squeal coming from the drill itself may indicate a dull drill. A groaning or rumbling sound may indicate that the drill is overloaded and the feed needs to be reduced. A chattering sound may indicate an off-center drill or a poorly sharpened drill. These or other noises could also be caused by internal parts of the machine. Consult the operator's manual and correct all problems before attempting to continue drilling.

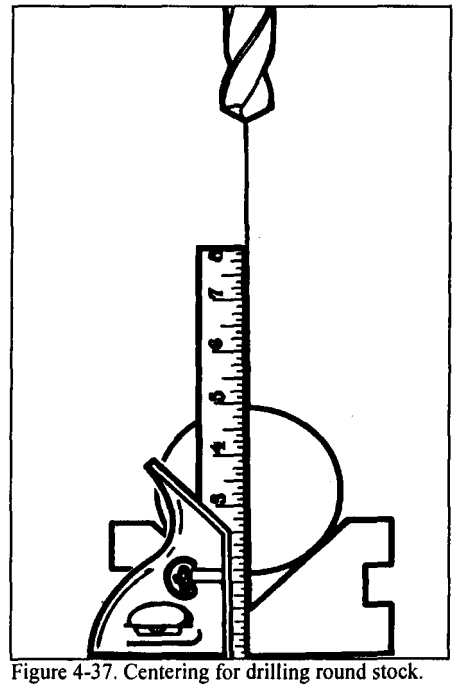
Figure 4-37. Centering for drilling round stock.

SPECIAL OPERATIONS ON DRILLING MACHINES

COUNTERSINKING

Countersinking is the tapering or beveling of the end of a hole with a conical cutter called a machine countersink. Often a hole is slightly countersunk to guide pins which are to be driven into the workpiece; but more commonly, countersinking is used to form recesses for flathead screws (Figure 4-38) and is similar to counterboring.

Types of Countersinks

Machine countersinks for machining recessed screw heads commonly have an included angle of 82°. Another common countersink has an included angle of 60° machining lathe centers. Some countersinks have a pilot on the tip to guide the countersink into the recess. Since these pilots are not interchangeable, these types of countersinks can be used for only one size of hole and are not practical for field or maintenance shops.

Countersink Alignment

Proper alignment of the countersink and the hole to be recessed are important. Failure to align the tool and spindle with the axis of the hole, or failure to center the hole, will result in an eccentric or out-of-round recess.

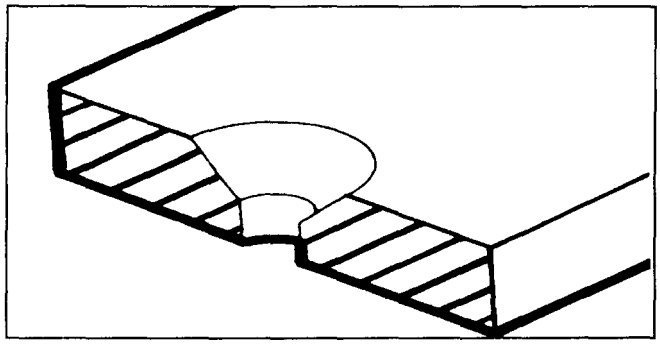

Figure 4-38. Countersunk hole.

Procedures for Countersinking

Good countersinking procedures require that the countersink be run at a speed approximately one-half of the speed for the same size drill. Feed should be light, but not too light to cause chatter. A proper cutting fluid should be used to produce a smooth finish. Rough countersinking is caused by too much speed, dull tools, failure to securely hold the work, or inaccurate feed. The depth stop mechanism should be used when countersinking to ensure the recess will allow the flathead screw to be flush with the surface (Figure 4-39).

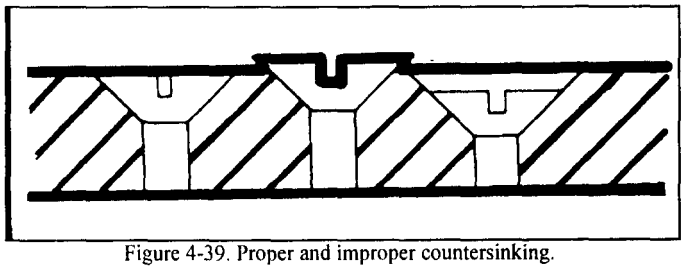

Figure 4-39. Proper and improper countersinking.

COUNTERBORING AND SPOT FACING

Counterboring is the process of using a counterbore to enlarge the upper end of a hole to a predetermined depth and machine a square shoulder at that depth (Figure 4-40). Spot facing is the smoothing off and squaring of a rough or curved surface around a hole to permit level seating of washers, nuts, or bolt heads (Figure 4-40). Counterbored holes are primarily used to recess socket head cap screws and similar bolt heads slightly below the surface. Both counterboring and spotfacing can be accomplished with standard counterbore cutters.

Counterbore cutters have a pilot to guide the counterbore accurately into the hole to be enlarged. If a counterbore is used without a pilot, then the counterbore flutes will not stay in one spot, but will wander away from the desired hole. The shank of counterbores can be straight or tapered. The pilots of counterbores can be interchangeable with one another so that many hole combinations can be accomplished.

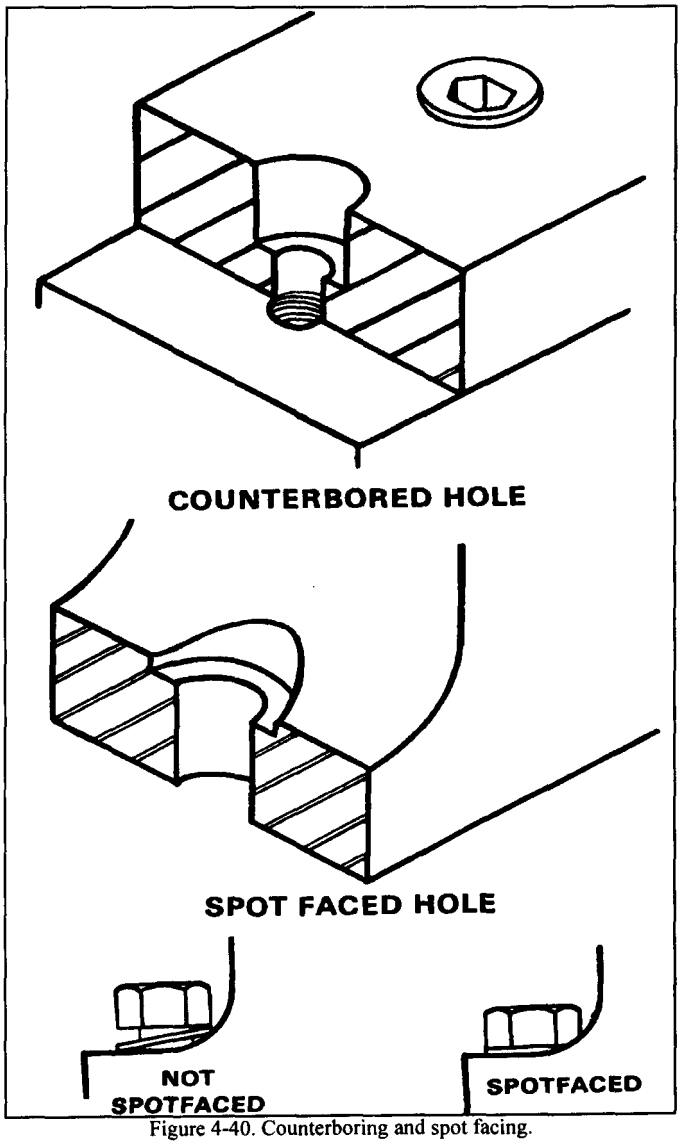

Figure 4-40. Counterboring and spot facing.

Counterboring

When counterboring, mount the tool into the drill chuck and set the depth stop 'mechanism for the required depth of shoulder cut. Set the speed to approximately one-half that for the same size of twist drill. Compute for the actual cutter size

and not the shank size when figuring speed. Mount the workpiece firmly to the table or vise. Align the workpiece on the center axis of the counterbore by fitting the pilot into the drilled hole. The pilot should fit with a sliding motion inside the hole. If the pilot fits too tightly, then the pilot could be broken off when attempting to counterbore. If the pilot fits too loosely, the tool could wander inside the hole, causing chatter marks and making the hole out of round.

Feeds for counterboring are generally 0.002 to 0.005 inch per revolution, but the condition of the tool and the type of metal will affect the cutting operation. Slow the speed and feed if needed. The pilot must be lubricated with lubricating oil during counterboring to prevent the pilot seizing into the work. Use an appropriate cutting fluid if the material being cut requires it. Use hand feed to start and accomplish counterboring operations. Power feed counterboring is used mainly for production shops.

Spot Facing

Spot facing is basically the same as counterboring, using the same tool, speed, feed, and lubricant. The operation of spot facing is slightly different in that the spot facing is usually done above a surface or on a curved surface. Rough surfaces, castings, and curved surfaces are not at right angles the cutting tool causing great strain on the pilot and counterbore which can lead to broken tools. Care must be taken when starting the spot facing cut to avoid too much feed. If the tool grabs the workpiece because of too much feed, the cutter may break or the workpiece may be damaged. Ensure that the work is securely mounted and that all backlash is removed from drilling machine spindle.

TAPPING

Tapping is cutting a thread in a drilled hole. Tapping is accomplished on the drilling machine by selecting and drilling the tap drill size (see Table 4-5 in Appendix A), then using the drilling machine chuck to hold and align the tap while it is turned by hand. The drilling machine is not a tapping machine, so it should not be used to power tap. To avoid breaking taps, ensure the tap aligns with the center axis of the hole, keep tap flutes clean to avoid jamming, and clean chips out of the bottom of the hole before attempting to tap.

Tapping Large Holes

One method of hand tapping is to mount an adjustable tap and reamer wrench on the square shank of the tap and install a pointed tool with a center in the drilling machine spindle (Figure 4-41). The tap is placed in the drilled hole and the tool's center point is placed in the center hole. The tap is held steady, without forcing, by keeping light pressure on it with the hand feed lever of the drilling machine, while turning the wrench and causing the tap to cut into the hole.

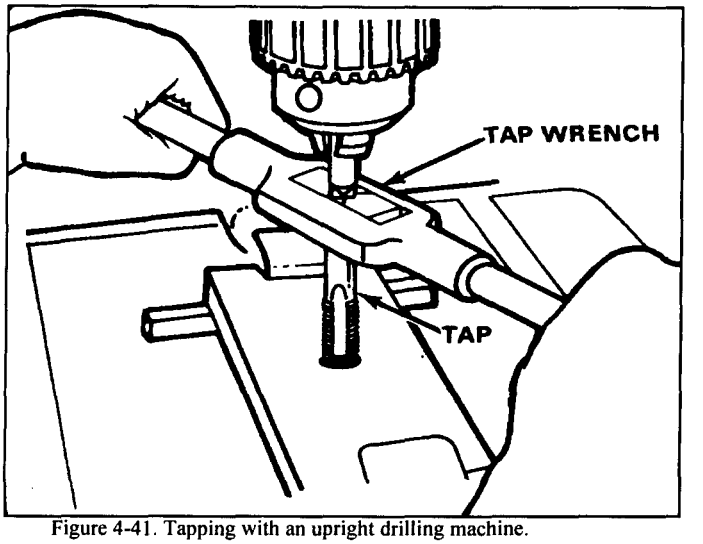

Figure 4-41. Tapping with an upright drilling machine.

Tapping Small Holes

Another method of hand tapping, without power, is to connect the tap directly into the geared drill chuck of the drilling machine and then turn the drill chuck by hand, while applying light pressure on the tap with the hand feed lever. This method works well on small hand-feed drilling machines when using taps smaller than 1/2-inch diameter.

REAMING

Reaming a drilled hole is another operation that can be performed on a drilling machine. It is difficult, if not impossible, to drill a hole to an exact standard diameter. When great accuracy is required, the holes are first drilled slightly undersized and then reamed to size (Figure 4-42). Reaming can be done on a drilling machine by using a hand reamer or using a machine reamer (Figure 4-43). When you must drill and ream a hole, it is best if the setup is not changed. For example, drill the hole (slightly undersized) and then ream the hole before moving to another hole. This method will ensure that the reamer is accurately aligned over the hole. If a previously drilled hole must be reamed, it must be accurately realigned under the machine spindle. Most hand and machine reamers have a slight chamfer at the tip to aid in alignment and starting (Figure 4-43).

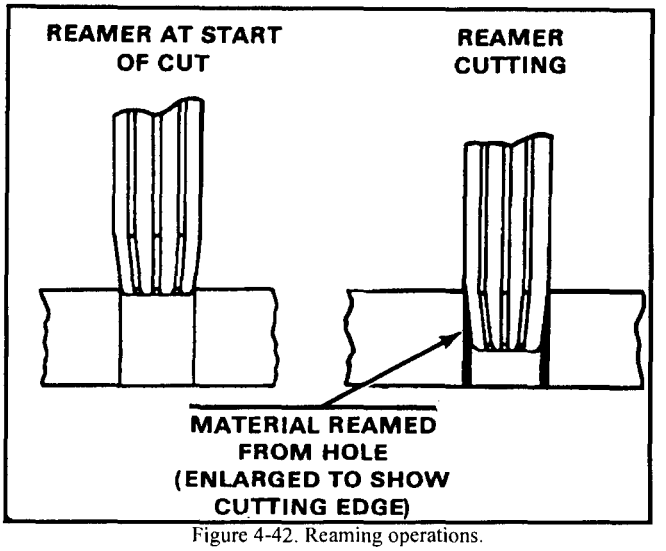

Figure 4-42. Reaming operations.

Hand Reamers

Solid hand reamers should be used when a greater accuracy in hole size is required. The cutting action of a hand reamer is performed on the taper (approximately 0.015 per inch) which extends 3/8- to 1/2- inch above the chamfer. This slight taper limits the stock allowance, or metal to be removed by the reamer, from 0.001- to 0.003-inch depending on the size of the reamer. The chamfer aids in aligning and starting the tool, and reamers usually have straight shanks and a square end to fit into an adjustable tap and reamer wrench. A hand reamer should never be chucked into a machine spindle for power reaming. A center may be installed in the drilling machine spindle to align and center the hand reamer. As the reamer is turned by hand into the hole, only a slight pressure is applied to the hand feed lever to keep the center in contact with the reamer and maintain accuracy in alignment.

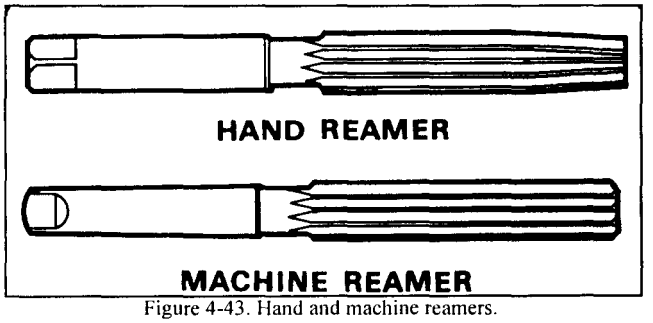

Figure 4-43. Hand and machine reamers.

Machine Reamer

Machine reamers can generally be expected to produce good clean holes if used properly. The cutting action of a machine reamer is performed on the chamfer and it will remove small amounts of material. The allowance for machine reamers is generally 1/64 inch for reamers l/2-inch to 1 inch in diameter, a lesser amount for smaller holes, and greater than 1/64-inch for holes over 1 inch. Machine reamers for use on drilling machines or lathes have taper shanks to fit the machine spindle or straight shanks for inserting into a drill chuck. A reamer must run straight and true to produce a smooth finish. The proper cutting fluid for the metal being cut should be used. Generally, the speed used for machine reaming would be approximately one-half that used for the same size drill.

Reaming Operations

Reamer cutting edges should be sharp and smooth. For accurate sizes, check each reamer with a micrometer prior to use. Never start a reamer on an uneven or rough surface, and never rotate a reamer backwards. Continue to rotate the reamer clockwise, even while withdrawing from the hole. Use just enough feed pressure to keep the reamer feeding into the work. Excessive feed may cause the reamer to dig in and break or grab the workpiece and wrench it from the vise.

BORING

Occasionally a straight and smooth hole is needed which is too large or odd sized for drills or reamers. A boring tool can be inserted into the drilling machine and bore any size hole into which the tool holder will fit. A boring bar with a tool bit installed is used for boring on the larger drilling machines. To bore accurately, the setup must be rigid, machine must be sturdy, and power feed must be used. Boring is not recommended for hand-feed drilling machines. Hand feed is not smooth enough for boring and can be dangerous. The tool bit could catch the workpiece and throw it back at the operator. First, secure the work and drill a hole for the boring bar. Then, insert the boring bar without changing the setup. Use a dial indicator to set the size of bored hole desired by adjusting the tool bit in the boring tool holder; then, set the machine speed and feed. The speed is set at the speed recommended for drilling a hole of the same size. Feed should be light, such as 0.005 to 0.010 inch per revolution. Start the machine and take a light cut. Check the size of the hole and make necessary adjustments. Continue boring with a more rough cut, followed by a smoother finishing cut. When finished, check the hole with an internal measuring device before changing the setup in case any additional cuts are required.

Chapter 5

GRINDING MACHINES

Grinding is the process of removing metal by the application of abrasives which are bonded to form a rotating wheel. When the moving abrasive particles contact the workpiece, they act as tiny cutting tools, each particle cutting a tiny chip from the workpiece. It is a common error to believe that grinding abrasive wheels remove material by a rubbing action; actually, the process is as much a cutting action as drilling, milling, and lathe turning.

The grinding machine supports and rotates the grinding abrasive wheel and often supports and positions the workpiece in proper relation to the wheel.

The grinding machine is used for roughing and finishing flat, cylindrical, and conical surfaces; finishing internal cylinders or bores; forming and sharpening cutting tools; snagging or removing rough projections from castings and stampings; and cleaning, polishing, and buffing surfaces. Once strictly a finishing machine, modem production grinding machines are used for complete roughing and finishing of certain classes of work.

Grinding machines have some special safety precautions that must be observed. These are in addition to those safety precautions described in Chapter 1.

SAFETY PRECAUTIONS

GRINDING MACHINE SAFETY

Grinding machines are used daily in a machine shop. To avoid injuries follow the safety precautions listed below.

- Wear goggles for all grinding machine operations.
- Check grinding wheels for cracks (Ring Test Figure 5-11) before mounting.
- Never operate grinding wheels at speeds in excess of the recommended speed.
- Never adjust the workpiece or work mounting devices when the machine is operating
- Do not exceed recommended depth of cut for the grinding wheel or machine.
- Remove workpiece from grinding wheel before turning machine off.
- Use proper wheel guards on all grinding machines.
- On bench grinders, adjust tool rest 1/16 to 1/8 inch from the wheel.

TYPES OF GRINDING MACHINES

From the simplest grinding machine to the most complex, grinding machines can be classified as utility grinding machines, cylindrical grinding machines. and surface grinding machines. The average machinist will be concerned mostly with floor-mounted and bench-mounted utility grinding machines, bufting machines. and reciprocating surface grinding machines.

UTILITY GRINDING MACHINES

The utility grinding machine is intended for offhand grinding where the workpiece is supported in the hand and brought to bear against the rotating grinding abrasive wheel. The accuracy of this type of grinding machine depends on the operator's dexterity. skill, and knowledge of the machine's capabilities and the nature of the work. The utility grinding machine consists of a horizontally mounted motor with a grinding abrasive wheel attached to each end of the motor shaft.

The electric-motor-driven machine is simple and common. It may be bench-mounted or floor-mounted. Generally, the condition and design of the shaft bearings as well as the motor rating determine the wheel size capacity of the machine. Suitable wheel guards and tool rests are provided for safety and ease of operation. Grinding machines come in various sizes and shapes as listed below.

Floor Mounted Utility Grinding Machine

The typical floor-mounted utility grinding machine stands waist-high and is secured to the floor by bolts. The floor-mounted utility grinding machine shown in Figure 5-1 mounts two 12-inch-diameter by 2-inch-wide grinding abrasive wheels. The two wheel arrangement permits installing a coarse grain wheel for roughing purposes on one end of the shaft and a fine grain wheel for finishing purposes on the other end this saves the time that would be otherwise consumed in changing wheels.

Each grinding abrasive wheel is covered by a wheel guard to increase the safety of the machine. Transparent eyeshields. spark arresters. and adjustable tool rests are provided for each grinding wheel. A tool tray and a water pan are mounted on the side of the base or pedestal. The water pan is used for quenching carbon steel cutting took as they are being ground. Using the 12-inch wheel, the machine provides a maximum cutting speed of approximately 5.500 SFPM. The 2-HP electric motor driving this machine has a maximum speed of 1.750 RPM.

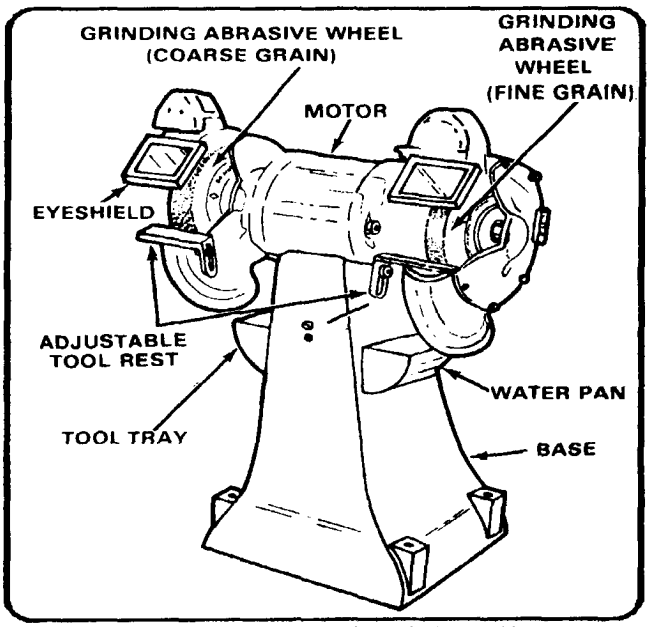

Figure 5-1. Floor-mounted utility grinding machine.

Bench Type Utility Grinding Machine

Like the floor mounted utility grinding machine, one coarse grinding wheel and one fine grinding wheel are usually mounted on the machine for convenience of operation. Each wheel is provided with an adjustable table tool rest and an eye shield for protection. On this machine, the motor is equipped with a thermal over-load switch to stop the motor if excessive wheel pressure is applied thus preventing the burning out of the motor. The motor revolve at 3.450 RPM maximum to provide a maximum cutting speed for the 7 inch grinding wheels of about 6,300 surface feet per minute (SFPM).

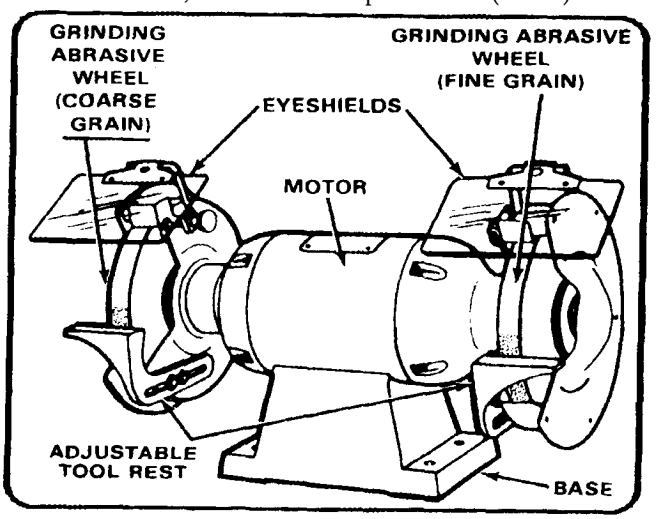

Figure 5-2. Bench-type utility grinding machine.

Bench-Type Utility Drill Grinding Machine

The bench-type drill grinding machine is intended for drill sharpening. The accuracy of this type of grinder is not dependent on the dexterity and skill of the operator because the drill is placed in a holding device. The holding device places the drill in the correct position for the clearance and included angle. For more information on this machine refer to chapter 4.

Bench-Type Utility Grinding and Buffing Machine

The bench-type utility grinding and buffing machine is more suitable for miscellaneous grinding, cleaning, and buffing It is not recommended for tool grinding since it contains no tool rests, eyeshields, or wheel guards. This machine normally mounts a 4 inch-diameter wire wheel on one end. The wire wheel is used for cleaning and the abrasive wheel is used for general grinding. One of the two wheels can be removed and a buffing wheel mounted in its place for buffing and polishing. The 1/4-HP electric motor revolves at a maximum of 3,450 RPM. The maximum cutting speed of the 4-inch-diameter wheel is approximately 3,600 SFPM.

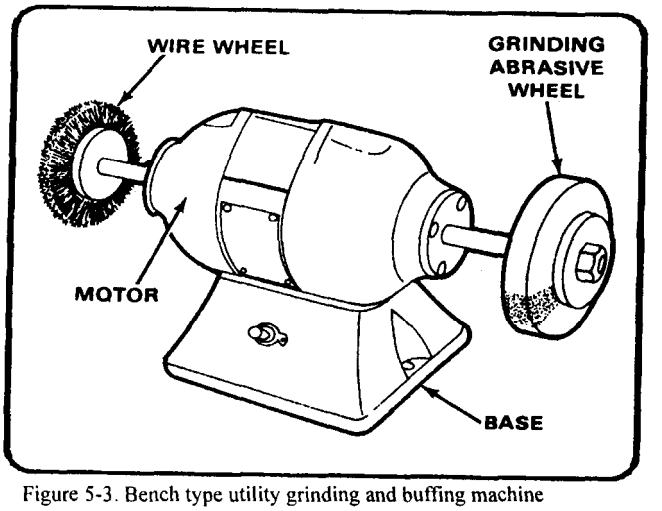

Figure 5-3. Bench type utility grinding and buffing machine

Bench-Type Tool and Cutter Grinder

The bench-type tool and cutter grinder, see Figure 5-4, was designed primarily to grind end mills. It can also grind a large variety of small wood and steel cutters as well as slitting saw cutters up to 12 inches in diameter using the saw grinding attachment. Capacity of the typical bench-type tool and cutter grinder is as follows:

- Grinding wheel travel - 7 1/2-inch vertical.
- Grinding wheel travel - 5 1/2-inch horizontal.
- Table travel - 6 inches.
- Slitting saws with attachment - 12-inch diameter.
- Distance between centers - 14 inches.
- Swing on centers (diameter) - 4 1/2-inch diameter.
- Swing in work head (diameter) - 4 1/2-inch diameter.

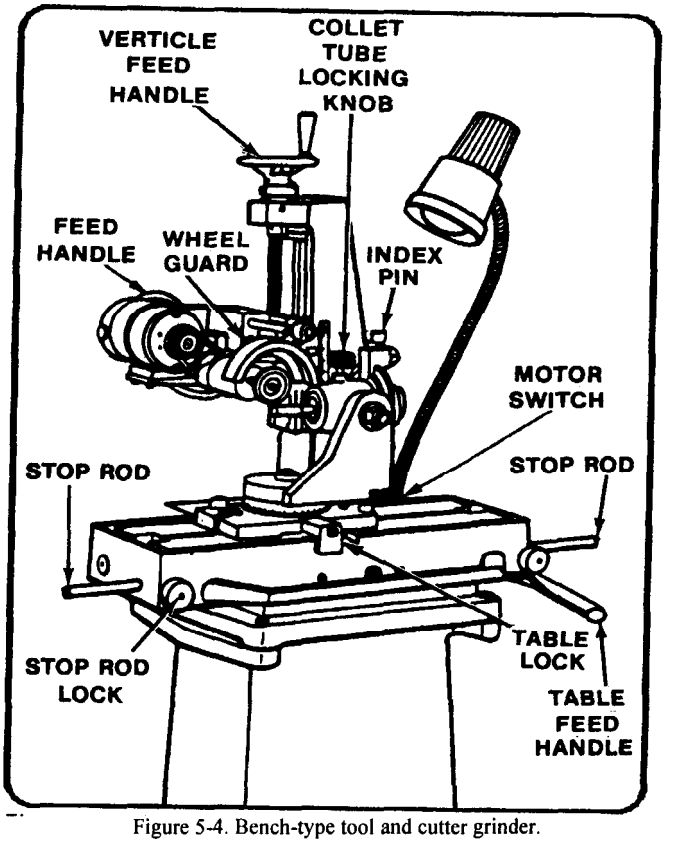

Figure 5-4. Bench-type tool and cutter grinder.

Nonspecialized cylindrical grinding machines in the Army maintenance system include the tool post grinding machine and the versa mil attachment.

Tool Post Grinding Machine

The tool post grinding machine, see Figure 5-5, is a machine tool attachment designed to mount to the tool post of engine lathes. It is used for internal and external grinding of cylindrical workplaces. Refer to Chapter 7 for a description of this machine.

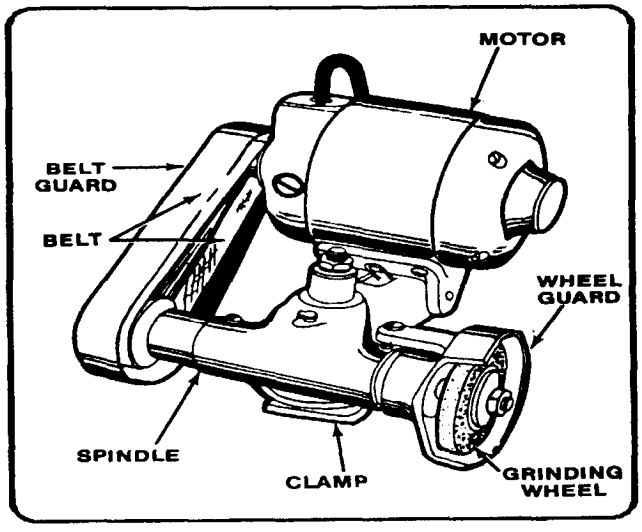

Figure 5-5. Tool post grinding machine.

Milling and Grinding Lathe Attachment

Also called a Versa-Mil this attachment is a versatile machine tool attachment that mounts to the carriage of a lathe. It performs internal and external cylindrical grinding among its other functions. Refer to Chapter 9 for a description of this machine.

SURFACE GRINDING MACHINE

The surface grinding machine is used for grinding flat surfaces. The workpiece is supported on a rectangular table which moves back and forth and reciprocates beneath the grinding wheel. Reciprocating surface grinding machines generally have horizontal wheel spindles and mount straight or cylinder-type grinding abrasive wheels.

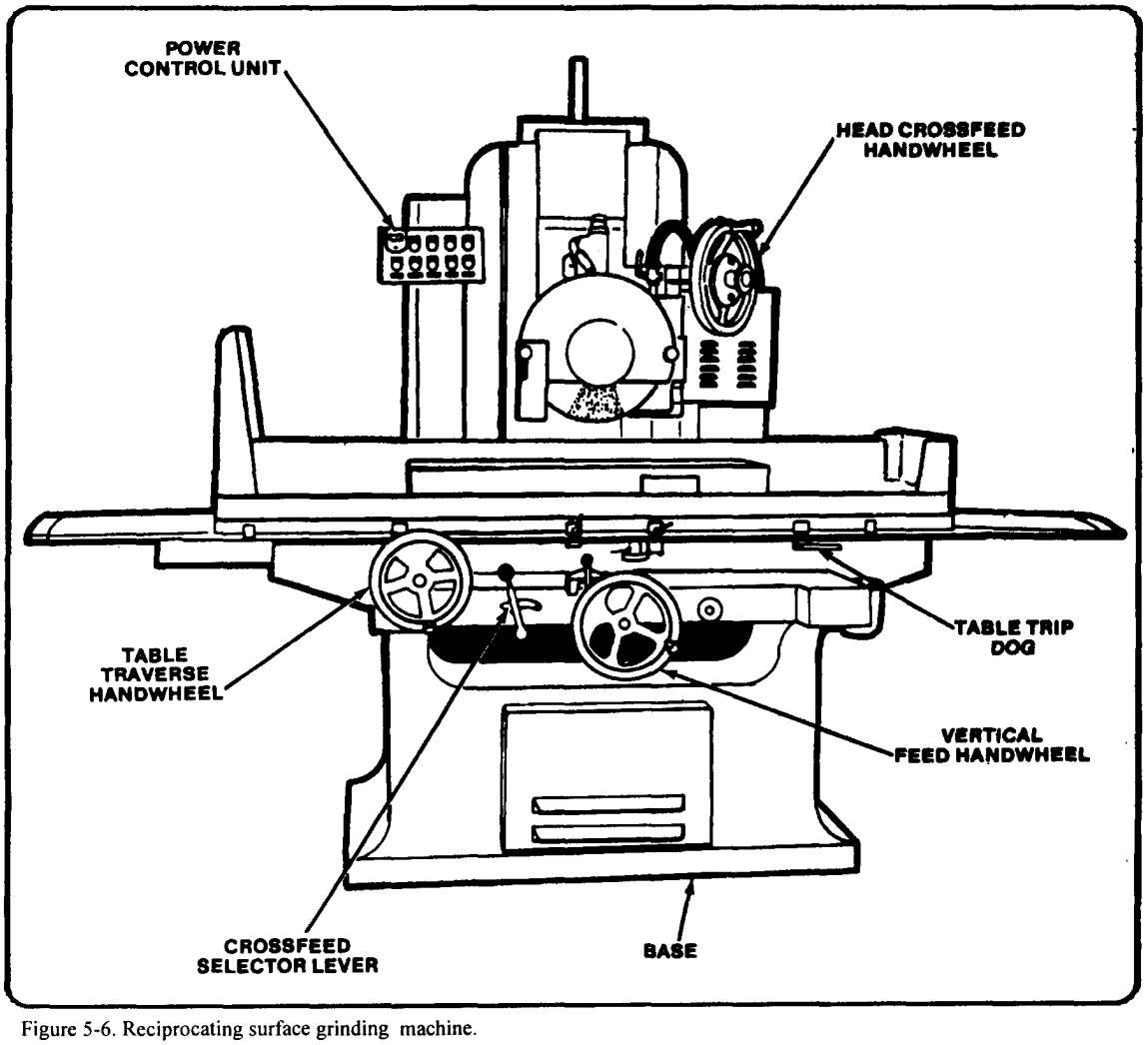

Figure 5-6. Reciprocating surface grinding machine.

RECIPROCATING SURFACE GRINDING MACHINE

The reciprocating surface grinding machine is a horizontal-type surface grinding machine. Workpieces are fastened to the table and can be moved beneath the grinding abrasive wheel by hand or power feed. A magnetic chuck maybe used for fastening the workpiece to the table. This grinding machine has an internal pump and piping network for automatic application and recirculation of a coolant to the workpiece and wheel. The grinding abrasive wheel, mounted to the horizontal spindle is straight and cuts on its circumferential surface only. Grinding wheel speeds are adjustable.

GRINDING WHEELS

STANDARD TYPES OF GRINDING WHEELS

Grinding wheels come in many different sizes, shapes, and abrasives (Figure 5-7). Some of the various types are listed below.

Straight

Straight wheels, numbers 1, 5, and 7, are commonly applied to internal, cylindrical, horizontal spindle, surface, tool, and offhand grinding and snagging. The recesses in type numbers.5 and 7 accommodate mounting flanges. Type number 1 wheels from 0.006-inch to l/8-inch thick are used for cutting off stock and slotting.

Cylinder

Cylinder wheels, type number 2, may be arranged for grinding on either the periphery or side of the wheel.

Tapered

Tapered wheels, type number 4, take tapered safety flanges to keep pieces from flying if the wheel is broken while snagging.

Straight Cup

The straight cup wheel, type number 6, is used primarily for surface grinding, but can also be used for offhand grinding of flat surfaces. Plain or beveled faces are available.

Flaring Cup

The flaring cup wheel, type number 11, is commonly used for tool grinding. With a resinoid bond, it is useful for snagging. Its face may be plain or beveled.

Dish

The chief use of the dish wheel, type number 12, is in tool work. Its thin edge can be inserted into narrow places, and it is convenient for grinding the faces of form-relieved milling cutters and broaches.

Saucer

The saucer wheel, type number 13, is also known as a saw gummer because it is used for sharpening saws.

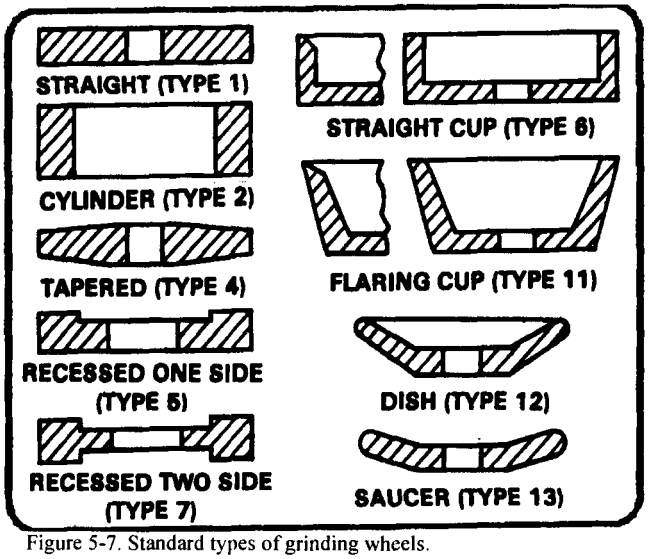

Figure 5-7. Standard types of grinding wheels.

ABRASIVE MATERIALS

The abrasive grains are the cutting took of a grinding wheel. They actually cut small pieces or chips off the work as the wheel rotates. The shape of each grain is irregular with several sharp cutting edges. When these edges grow dull, the forces acting on the wheel tend to fracture the abrasive grains and produce new cutting edges.

ABRASIVES

Most grinding wheels are made of silicon carbide or aluminum oxide, both of which are artificial (manufactured) abrasives. Silicon carbide is extremely hard but brittle. Aluminum oxide is slightly softer but is tougher than silicon carbide. It dulls more quickly, but it does not fracture easily therefore it is better suited for grinding materials of relatively high tensile strength.

ABRASIVE GRAIN SIZE

Abrasive grains are selected according to the mesh of a sieve through which they are sorted. For example, grain number 40 indicates that the abrasive grain passes through a sieve having approximately 40 meshes to the linear inch. A grinding wheel is designated coarse, medium, or fine according to the size of the individual abrasive grains making up the wheel.

BONDING MATERIAL

Bond

The abrasive particles in a grinding wheel are held in place by the bonding agent. The percentage of bond in the wheel determines, to a great extent, the "hardness" or "grade" of the wheel. The greater the percentage and strength of the bond, the harder the grinding wheel will be. "Hard" wheels retain the cutting grains longer, while "soft" wheels release the grains quickly. If a grinding wheel is "too hard" for the job, it will glaze because the bond prevents dulled abrasive particles from being released so new grains can be exposed for cutting. Besides controlling hardness and holding the abrasive, the bond also provides the proper safety factor at running speed. It holds the wheel together while centrifugal force is trying to tear it apart. The most common bonds used in grinding wheels are vitrified, silicate, shellac, resinoid, and rubber.

Vitrified

A vast majority of grinding wheels have a vitrified bond. Vitrified bonded wheels are unaffected by heat or cold and are made in a greater range of hardness than any other bond. They adapt to practically all types of grinding with one notable exception: if the wheel is not thick enough, it does not withstand side pressure as in the case of thin cutoff wheels.

Silicate

Silicate bond releases the abrasive grains more readily than vitrified bond. Silicate bonded wheels are well suited for grinding where heat must be kept to a minimum, such as grinding edged cutting tools. It is not suited for heavy-duty grinding. Thin cutoff wheels are sometimes made with a shellac bond because it provides fast cool cutting.

Resinoid

Resinoid bond is strong and flexible. It is widely used in snagging wheels (for grinding irregularities from rough castings), which operate at 9,500 SFPM. It is also used in cutoff wheels.

Rubber

In rubber-bonded wheels, pure rubber is mixed with sulfur. It is extremely flexible at operating speeds and permits the manufacture of grinding wheels as thin as 0.006 inch for slitting nibs. Most abrasive cutoff machine wheels have a rubber bond.

GRADES OF HARDNESS

The grade of a grinding wheel designates the hardness of the bonded material. Listed below are examples of those grades:

- A soft wheel is one on which the cutting particles break away rapidly while a hard wheel is one on which the bond successfully opposes this breaking away of the abrasive grain.

- Most wheels are graded according to hardness by a letter system. Most manufacturers of grinding abrasive wheels use a letter code ranging from A (very soft) to Z (very hard). Vitrified and silicate bonds usually range from very soft to very hard, shellac and resinoid bonds usually range from very soft to hard, and rubber bonds are limited to the medium to hard range.

The grade of hardness should be selected as carefully as the grain size. A grinding abrasive wheel that is too soft will wear away too rapidly, the abrasive grain will be discarded from the wheel before its useful life is realized. On the other hand, if the wheel is too hard for the job, the abrasive particles will become dull because the bond will not release the abrasive grain, and the wheel's efficiency will be impaired.

Figure 5-8 illustrates sections of three grinding abrasive wheels with different spacing of grains. If the grain and bond materials in each of these are alike in size and hardness, the wheel with the wider spacing will be softer than the wheel with the closer grain spacing. Thus, the actual hardness of the grinding wheel is equally dependent on grade of hardness and spacing of the grains or structure.

GRINDING WHEEL ABRASIVE

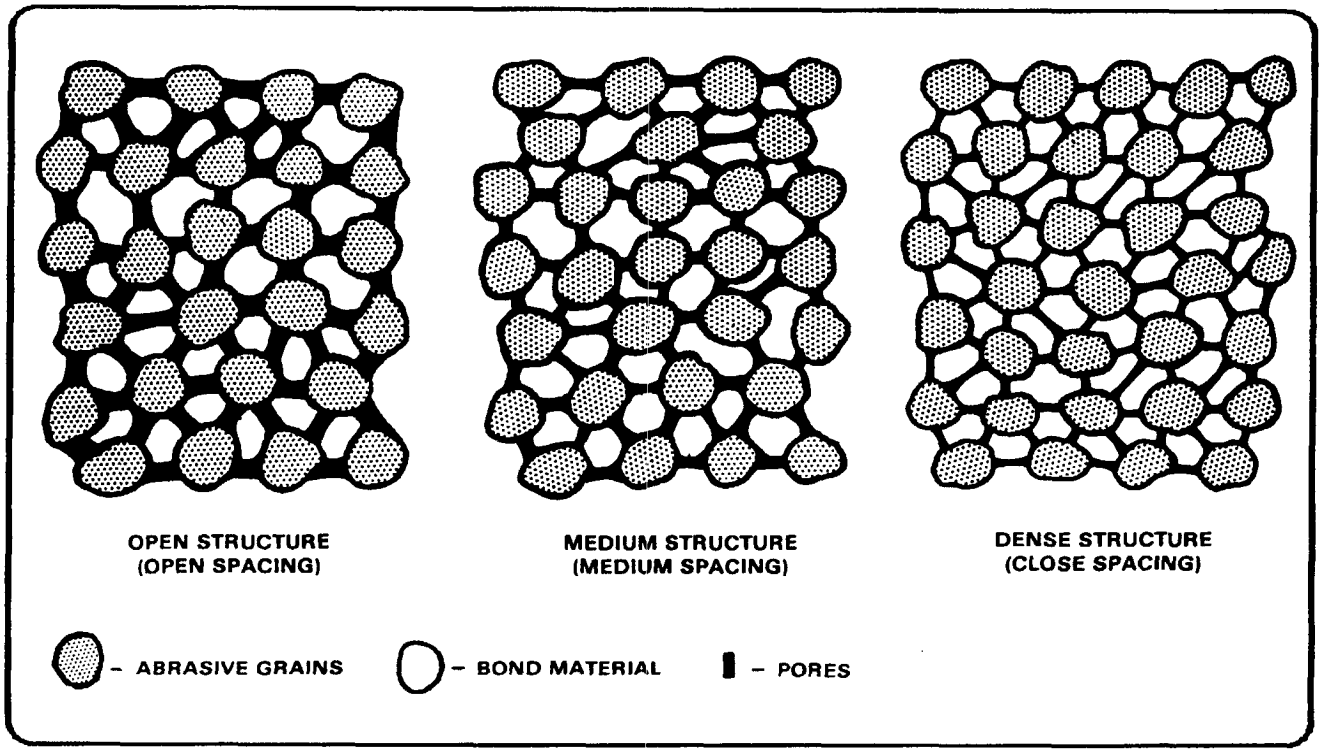

Figure 5-8. Grinding wheel abrasive.

ABRASIVE WHEEL STRUCTURE

Bond strength of a grinding wheel is not wholly dependent upon the grade of hardness but depends equally on the structure of the wheel, that is, the spacing of the grain or its density. The structure or spacing is measured in number of grains per cubic inch of wheel volume.

MARKINGS

Every grinding wheel is marked by the manufacturer with a stencil or a small tag. The manufacturers have worked out a standard system of markings, shown in Figure 5-9.

For an example use a wheel marked A36-L5-V23. The A refers to the abrasive which is aluminum oxide. The 36 represents the grain size. The L shows the grade or degree of hardness, which is medium. The 5 refers to the structure of the wheel and the V refers to the bond type.

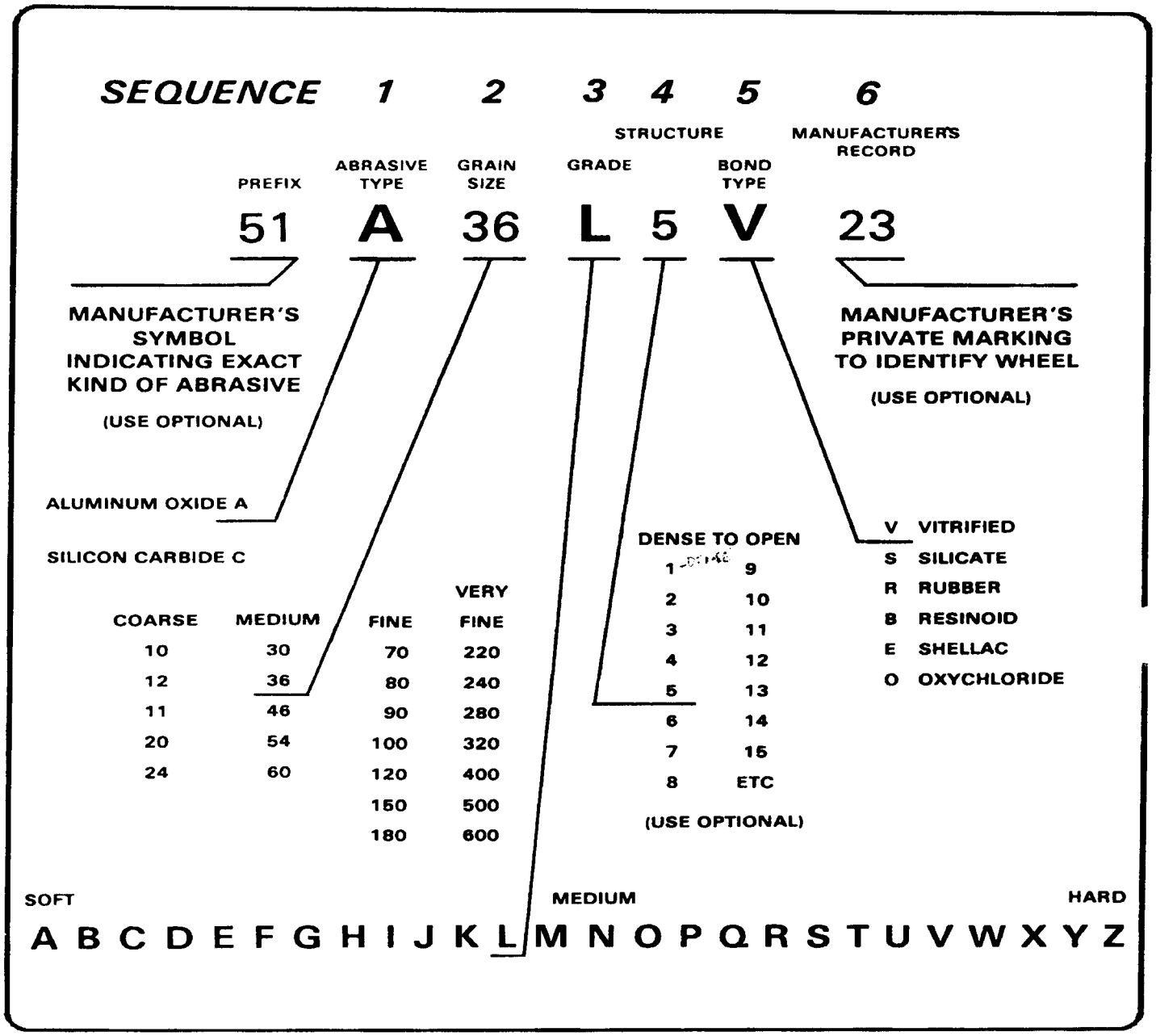

Figure 5-9. Standard system of markings.

STANDARD SHAPES OF GRINDING WHEEL FACES

Figure 5-10 illustrates standard shapes of grinding wheel faces. The nature of the work dictates the shape of the face to be used. For instance, shape A is commonly used for straight cylindrical grinding and shape E for grinding threads.

SELECTION OF GRINDING WHEELS

Conditions under which grinding wheels are used vary considerably, and a wheel that is satisfactory on one machine may be too hard or soft for the same operation on another machine. The following basic factors are considered when selecting grinding wheels, though it should be understood that the rules and conditions listed are flexible and subject to occasional exceptions.

Tensile Strength of Material

The tensile of material to be ground is the main factor in the selection of the abrasive to be used. Two types of abrasives are suited to different materials as shown below.

Silicon Carbide

Gray and chilled iron
Brass and soft bronze
Aluminum and copper
Marble and other stone
Rubber and leather
Very hard alloys
Cemented carbides
Unannealed malleable iron

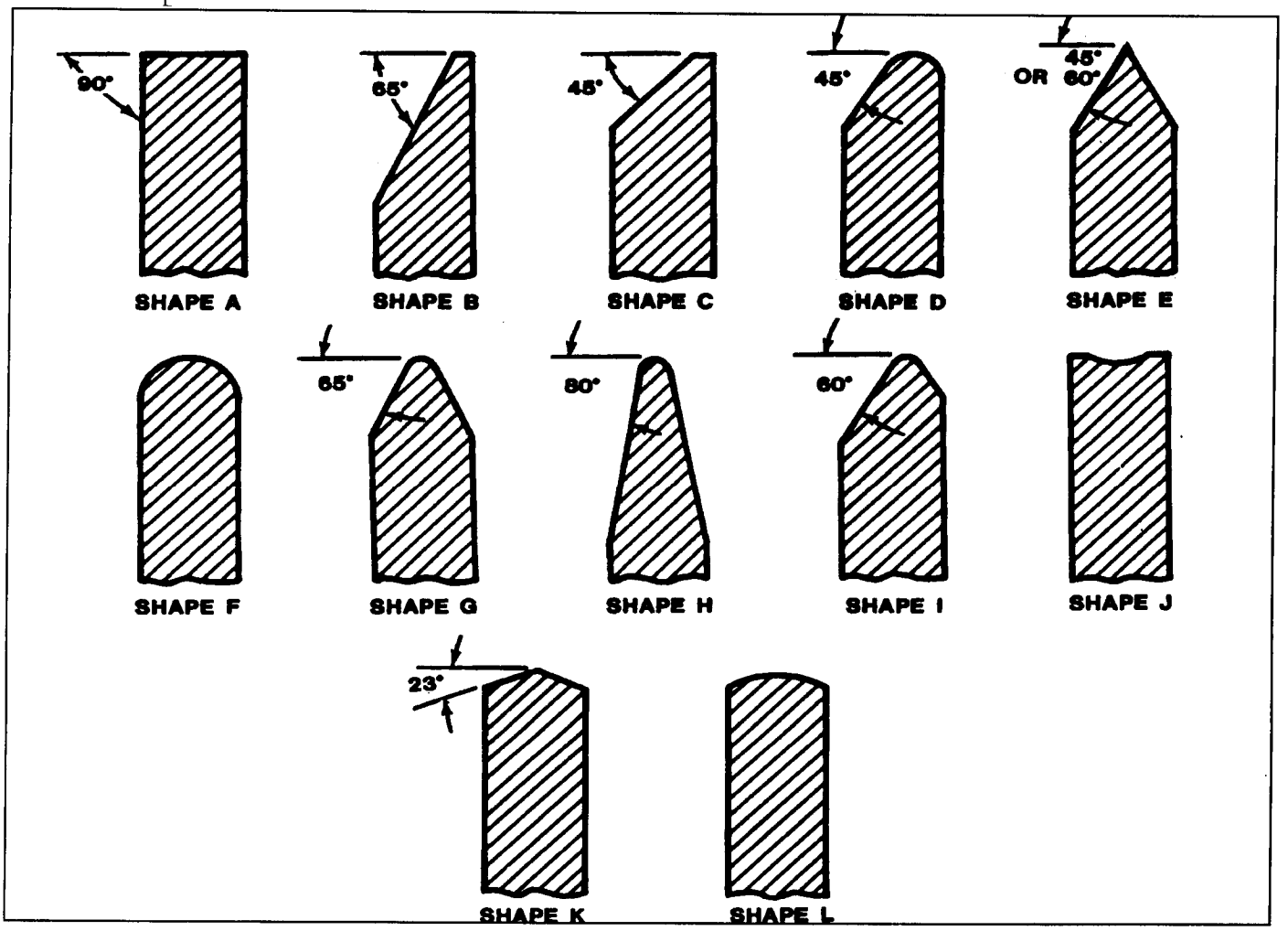

Figure 5-10. Standard shapes of grinding wheel faces.

Aluminum Oxide

Carbon steels
Alloy steels
High speed steels
Annealed malleable iron
Wrought iron
Hard bronzes

Factors Affecting the Grain Size

Grain size to be chosen when selecting a grinding wheel depends upon the factors described below.

- The softer and more ductile the material, the coarser the grain size.
- The larger the amount of stock to be removed, thecoarser the grain size.
- The finer the finish desired, the finer the grain size.

Factors Affecting the Grade of Hardness

The factors described below will determine the proper grade of hardness of the grinding wheel.

- The harder the material, the softer the wheel.
- The smaller the arc of contact, the harder the grade should be. The arc of contact is the arc, measured along the periphery of the wheel, that is in contact with the work at any instance. It follows that the larger the grinding wheel, the greater the arc of contact and, therefore, a softer wheel can be used.
- The higher the work speed with relation to the wheel speed, the milder the grinding action and the harder the grade should be.
- The better the condition of the grinding machine and spindle bearings, the softer the wheel can be.

Factors Affecting the Structure

The structure or spacing of the abrasive grains of wheel depends upon the four factors described below.

- The softer, tougher, and more ductile the material, the wider the grain spacing.
- The finer the finish desired, the closer, or more dense, the grain spacing should be.
- Surfacing operations require open structure (wide grain spacing).
- Cylindrical grinding and tool and cutter grinding are best performed with wheels of medium structure (medium grain spacing).

Factors Affecting Bonding Material

The factors described below affect the selection of bonding material for the wheel desired.

- Thin cutoff wheels and other wheels subject to bending strains require resinoid, shellac, or rubber bonds.
- Solid wheels of very large diameters require a silicate bond.
- Vitrified wheels are usually best for speeds up to 6,500 SFPM and resinoid, shellac, or rubber wheels are best for speeds above 6,500 SFPM.
- Resinoid, shellac, or rubber bonds are generally best where a high finish is required.

Selection

Refer to Table 5-1 in Appendix A for specific requirements for typical grinding and materials (grinding wheel selection and application).

INSPECTION OF GRINDING WHEELS

When a grinding wheel is received in the shop or removed from storage, it should be inspected closely for damage or cracks. Check a small wheel by suspending it on one finger or with a piece of string. Tap it gently with a light nonmetallic instrument, such as the handle of a screwdriver (Figure 5-11).

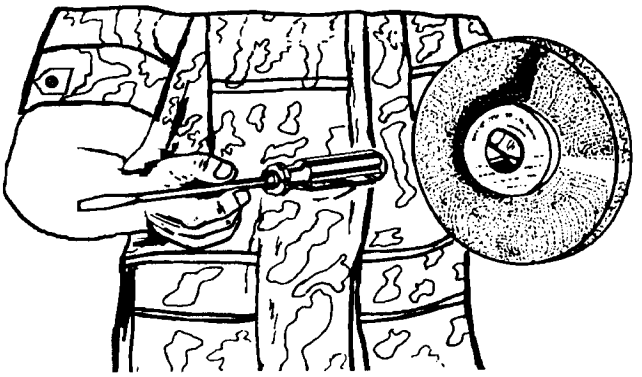

Figure 5-11. Checking for cracks.

Check a larger wheel by striking it with a wooden mallet. If the wheel does not give a clear ring, discard it. All wheels do not emit the same tone; a low tone does not necessarily mean a cracked wheel. wheels are often filled with various resins or greases to modify their cutting action, and resin or grease deadens the tone. Vitrified and silicate wheels emit a clear metallic ring. Resin, rubber, and shellac bonded wheels emit a tone that is less clear. Regardless of the bond, the sound of a cracked wheel is easy to identify.

MOUNTING GRINDING WHEELS

The proper mounting of a grinding wheel is very important. An improperly mounted wheel may become potentially dangerous at high speeds.

The specified wheel size for the particular grinding machine to be used should not be exceeded either in wheel diameter or in wheel width. Figure 5-12 illustrates a correctly mounted grinding wheel.

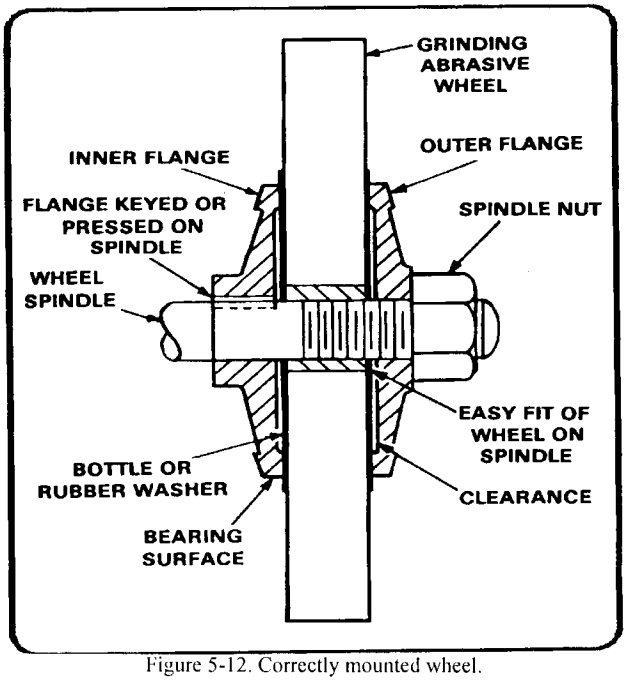

Figure 5-12. Correctly mounted wheel.

The following four items are methods and procedures for mounting grinding wheels:

- Note that the wheel is mounted between two flanges which are relieved on their inner surfaces so that they support the wheel only at their outer edges. This holds the wheel more securely with less pressure and with less danger of breaking. For good support, the range diameter should be about one-third of the wheel diameter.
- The spindle hole in the wheel should be no more than 0.002 inch larger than the diameter of the spindle, since a loose fit will result in difficulty in centering the wheel. If the spindle hole is oversize, select another wheel of the proper size. If no others are available, fit a suitable bushing over the spindle to adapt the spindle to the hole.
- Paper blotters of the proper size usually come with The grinding wheel. If the proper blotters are missing, cut them from heavy blotter paper (no more than 0.025-inch thick:) and place them between the grinding wheel and each flange. The blotters must be large enough to cover the whole area of contact between the flanges and the wheel. These blotters serve as cushions to minimize wheel breakage.
- When installing the grinding wheel on the wheel spindle, tighten the spindle nut firmly, but not so. tight that undue strain will be put on the wheel.

WHEEL DRESSERS

Grinding wheels wear unevenly under most general grinding operations due to uneven pressure applied to the face of the wheel when it cuts. Also, when the proper wheel has not been used for certain operations, the wheel may become charged with metal particles, or the abrasive grain may become dull before it is broken loose from the wheel bond. [n these cases, it is necessary that the wheel be dressed or trued to restore its efficiency and accuracy.

Dressing is cutting the face of a grinding wheel to restore its original cutting qualities. Truing is restoring the wheel's concentricity or reforming its cutting face to a desired shape. Both operations are performed with a tool called an abrasive wheel dresser (Figure 5- 13).

Mechanical Dresser

The hand-held mechanical dresser has alternate pointed and solid discs which are loosely mounted on a pin. This dresser is used to dress coarse-grit wheels and wheels used in hand grinding operations.

Abrasive Stick Dresser

The abrasive stick dresser comes in two shapes: square for hand use, and round for mechanical use. It is often used instead of the more expensive diamond dresser for dressing shaped and form wheels. It is also used for general grinding wheel dressing.

Abrasive Wheel Dresser

The abrasive wheel dresser is a bonded silicon carbide wheel that is fastened to the machine table at a slight angle to the grinding wheel and driven by contact with the wheel. This dresser produces a smooth, clean-cutting face that leaves no dressing marks on the work.

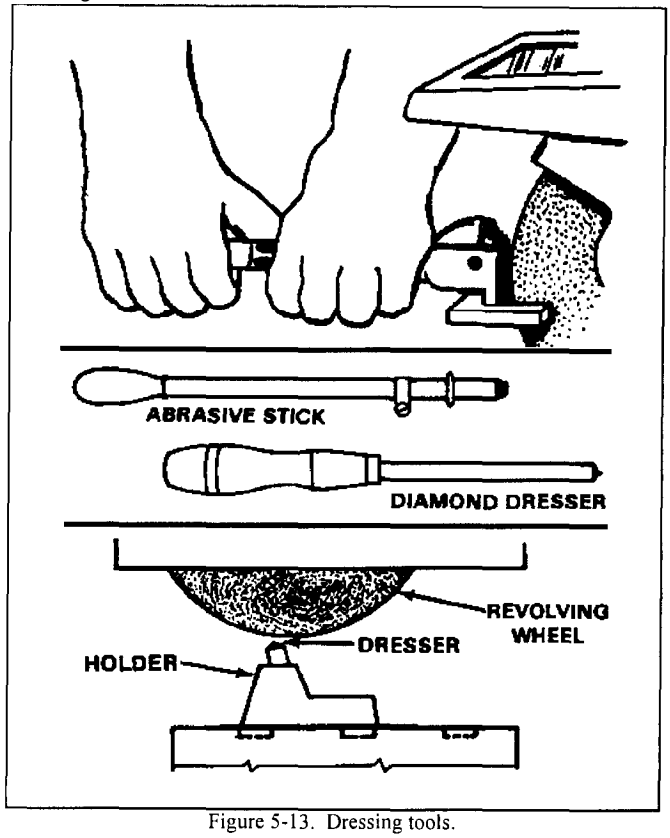

Figure 5-13. Dressing tools.

Diamond Dresser

The diamond dresser is the most efficient for truing wheels for precision grinding, where accuracy and high finish are required.

A dresser may have a single diamond or multiple diamonds mounted in the end of a round steel shank. Inspect the diamond point frequently for wear. It is the only usable part of the diamond, and is worn away it cannot dress the wheel properly.

Slant the diamond 3° to 15° in the direction of rotation and 30° to the plane of the wheel as shown in Figure 5-14 to prevent chatter and gouging. Rotate the diamond slightly in it's holder between dressing operations to keep it sharp. A dull diamond will force the abrasive grains into the bond pores and load the face of the wheel, reducing the wheel's cutting ability.

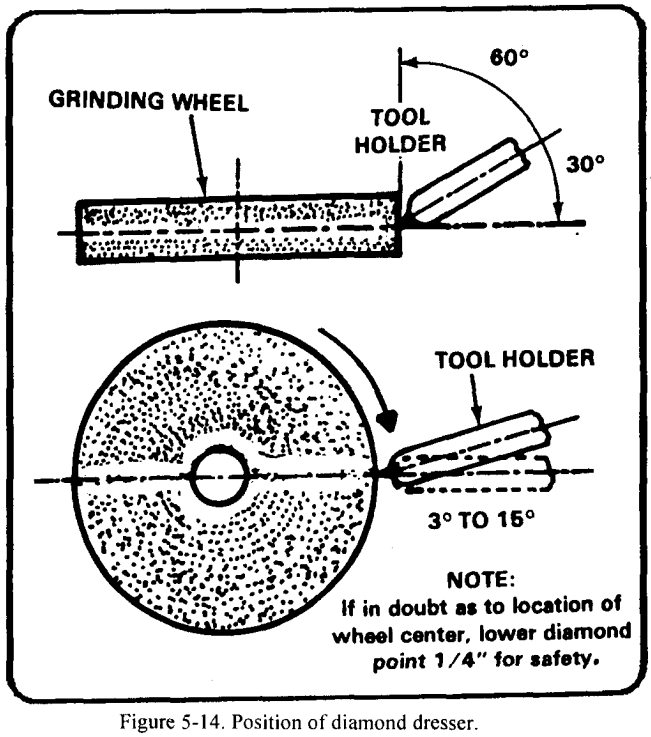

Figure 5-14. Position of diamond dresser.

When using a diamond dresser to dress or true a grinding wheel, the wheel should be turning at, or slightly less than, normal operating speed never at the higher speed. For wet grinding, flood the wheel with coolant when you dress or true it. For dry grinding, the wheel should be dressed dry. The whole dressing operation should simulate the grinding operation as much as possible. Whenever possible, hold the dresser by some mechanical device. It is a good idea to round off wheel edges with a handstone after dressing to prevent chipping. This is especially true of a fine finishing wheel. Do not round off the edges if the work requires sharp corners. The grinding wheel usually wears more on the edges, leaving a high spot towards the center. When starting the dressing or truing operation, be certain that the point of the dressing tool touches the highest spot of the wheel first, to prevent the point from digging in.

Feed the dresser tool point progressively, 0.001 inch at a time, into the wheel until the sound indicates that the wheel is perfectly true. The rate at which you move the point across the face of the wheel depends upon the grain and the grade of the wheel and the desired finish. A slow feed gives the wheel a fine finish, but if the feed is too slow, the wheel may glaze. A fast feed makes the wheel free cutting, but if the feed is too fast, the dresser will leave tool marks on the wheel. The correct feed can only be found by trial, but a uniform rate of feed should be maintained during any one pass.

BUFFING AND POLISHING WHEELS

Buffing and polishing wheels are formed of layers of cloth felt or leather glued or sewed together to form a flexible soft wheel.

Buffing wheels are generally softer than polishing wheels and are often made of bleached muslin (sheeting), flannel, or other soft cloth materials. The material is cut in various diameters and sewed together in sections which are put together to make up the buffing wheel. The buffing wheel is often slotted or perforated to provide ventilation.

Polishing wheels are made of canvas, felt, or leather sewed or glued together to provide various wheel grades from soft to hard. The harder or firmer wheels are generally used for heavier work while the softer and more flexible wheels are used for delicate contour polishing and finishing of parts on which corners and edges must be kept within rather strict specifications.

Buffing and polishing wheels are charged with abrasives for operation. The canvas wheels are generally suitable for use with medium grain abrasives, while felt, leather, and muslin wheels are suitable for fine grain abrasives. Buffing abrasives are usually made in the form of cakes, paste, or sticks which are applied to the wheel in this form. Polishing abrasives are fixed to polishing wheels with a glue.

WIRE WHEELS

A wire wheel consists of many strands of wire bound to a hub and radiating outward from the hub in the shape of a wheel. The wire wheel is used in place of a grinding wheel for cleaning operations such as removal of rust or corrosion from metal objects and for rough-polishing castings, hot-rolled steel, and so forth. The wire wheel fastens to the wheel spindle of the grinding machine in the same manner as a grinding wheel.

LAYING OUT AND MOUNTING WORK

LAYING OUT WORK

There are no special rules for laying out work for grinding operations. Most layout requirements will be dictated by the specific grinding machine to be used. In many cases, the workpiece will be turned on a lathe or machined in some other manner before grinding. The grinding is in preparation for the final finishing of the workpiece to the desired dimensions.

GRINDING ALLOWANCE

In planning work to be ground. the amount of metal to be removed should be based on the capabilities of the grinding machine. If the grinding machine is modern and in good condition, leave as much as 1/32-inch or even more on large machine steel parts, but generally not more than 1/64-inch on small machine parts.

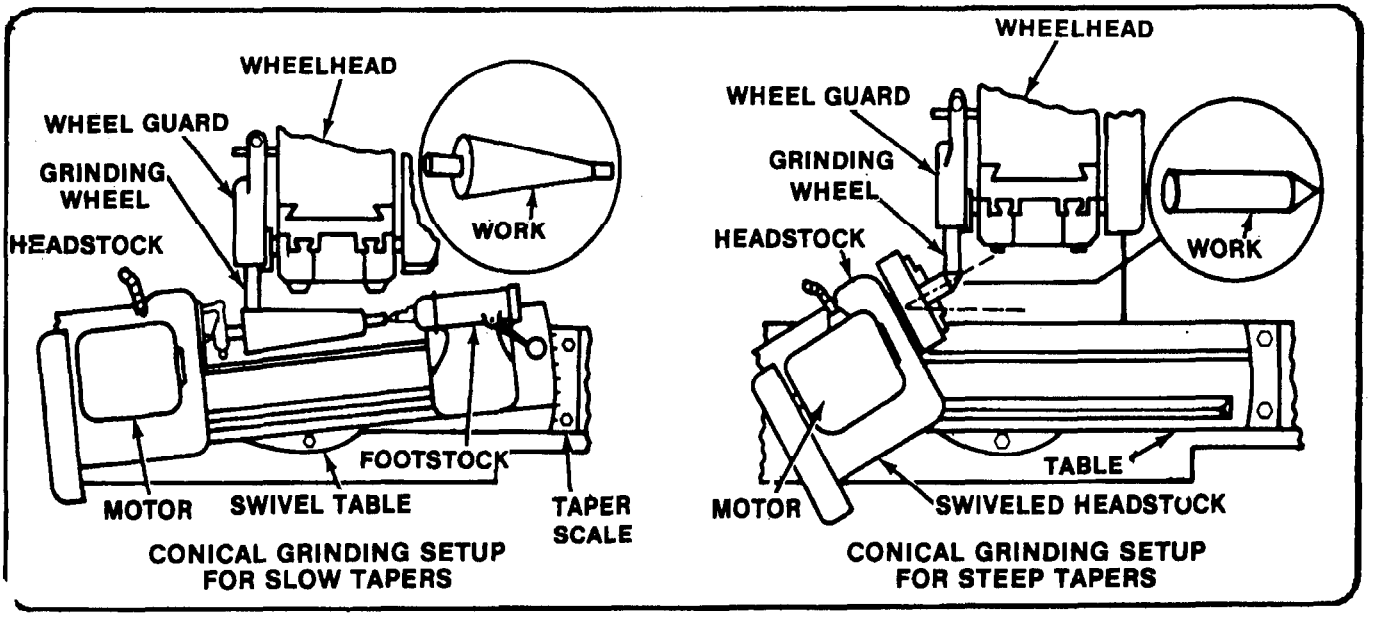

Figure 5-15. Conical grinding setups.

Cylindrical Grinding

If cylindrical grinding is to be performed, such as grinding of workplaces mounted in the grinding may be done with the workpiece set up between centers, held in a chuck and supported by a center rest, or clamped to a faceplate as in lathe setups.

MOUNTING WORKPIECES

General

Offhand grinding requires no mounting of the workpiece. Mounting for cylindrical, surface, and tool and cutter grinding is described below.

Mounting Workpiece for Cylindrical Grinding

Cylindrical grinding may be done with the workpiece setup between centers, held in the chuck and supported by a center rest, or clamped to the faceplate as in lathe setups.

Use the following methods when mounting the workpiece between centers:

- Use a dead center in the tailstock spindle. This method is preferred because it eliminates any error caused by wear in the machine's spindle bearings. Before grinding check the accuracy and alignment of centers and correct if necessary.
- To grind the centers, follow the procedures for grinding lathe centers in Chapter 7.
- After the centers are accurate, align the centers by one of the methods prescribed for aligning lathe centers.
- Position the workpiece between the centers, and use a lathe dog to revolve the workpiece.

Use the following methods and procedures when mounting the workpiece for concial grinding.

- Workpieces for conical grinding can be set up in a chuck or between centers.
- The table is swiveled to the required taper by means of the graduations on the end of the table (Figure 5-15).
- Since the table on a universal grinder is limited as to the degree that it can be swiveled, steep conical tapers are normally ground by swiveling the headstock to the angle of the taper desired (Figure 5-15).
- Remember when a workpiece is to be conically ground, the workpiece axis and the grinding wheel axis must be at the same height. Otherwise, the workpiece will not be ground at the correct angle.

Workpiece Mounted for Internal Grinding

Listed below are the proper procedures and methods to perform internal grinding.

Internal grinding is done with the universal tool and cutter grinder with an internal grinding attachment (Figure 5-16). Note that the belt and pulleys are exposed; during actual operation, this area should be covered with a guard. Since internal grinding uses small grinding wheels, the spindle and quill must operate at a high speed to get the required SFPM. Most internal grinding attachments come with several sizes of quills. Use the largest one possible for the hole being ground. The smaller quills tend to spring away from the work easily and produce tapers and irregularities.

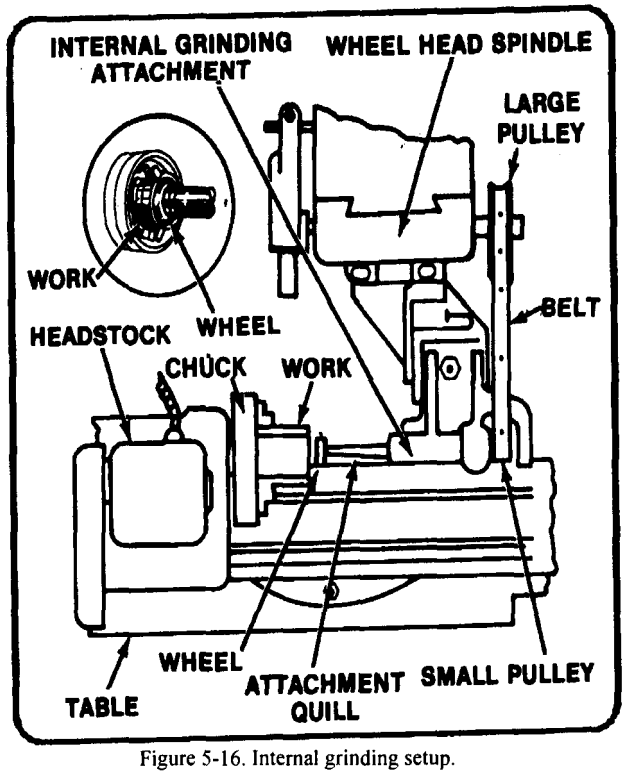

Figure 5-16. Internal grinding setup.

One condition that is more pronounced in internal grinding than in external grinding is that the larger area of contact may cause the wheel to load and glaze quickly which in turn causes vibration and produces poor surface finishes. Therefore, it is important to pay particular attention to the condition of the wheel and to use either a coarser grain wheel to provide more chip clearance or a softer grade wheel that will break down more easily. During grinding, let the grinding wheel run out of the end of the hole for at least one-half the width of the wheel face but not more than two-thirds. If the wheel clears the work each time the table reciprocates, it will grind bell-mouthed hole because of spring in the quill.

Internal conical tapers can also be ground on a universal grinding machine, using a combination of the rules for external conical grinding and those for straight internal grinding. The main thing to remember is to be sure that the axis of the quill is at center height with the axis of the work.

Mounting Workpiece for Surface Grinding

A workpiece for surface grinding is usually held to the reciprocating worktable by a magnetic chuck. It may also be held in a vise or clamped directly to the table.

The two types of magnetic chucks are permanent magnet and electric. The electric chucks are built in larger sizes and are more powerful. However, the permanent-magnet chucks are less dangerous, since accidental release of work (due to power failure) is not likely to occur.

Mounting Workpiece for Tool and Cutter Grinding

Listed below are methods for mounting workplaces when using the tool and cutter grinder:

- A workpiece for tool and cutter grinding is usually held between centers or on a fixture clamped to the table.
- The workpiece is mounted in the same manner as for cylindrical grinding, except the lathe dog if not used.
- When a fixture is used, the workpiece is placed in the fixture and the fixture is clamped to the table.

GENERAL GRINDING OPERATIONS

GENERAL

Efficient grinding depends primarily upon the proper setup of the machine being used. If the machine is not securely mounted, vibration will result, causing the grinder to produce an irregular surface. Improper alignment affects grinding accuracy, and it is good practice to check the security and plumb of the machine every few months. It is advisable to place a strip of cushioning material under the mounting flanges, along with any necessary aligning shims, to help absorb vibration.

When a grinding wheel is functioning properly, the abrasive grains cut very small chips from the workpiece and at the same time a portion of the bond of the wheel is worn away. As long as the bond is being worn away as fast as the abrasive grains of the wheel become dull, the wheel will continue to work well. If the bond is worn away too rapidly, the wheel is too soft and will not last as long as it should. If the cutting grains wear down faster than the bond, the face of the wheel becomes glazed and the wheel will not cut freely.

CLASSES OF GRINDING

Precision and semiprecision grinding may be divided into the following classes:

Cylindrical Grinding

Cylindrical grinding denotes the grinding of a cylindrical surface. Usually, “Cylindrical grinding” refers to external cylindrical grinding and the term “internal grinding” is used for internal cylindrical grinding. Another form of cylindrical grinding is conical grinding or grinding tapered workpieces.

Surface Grinding

Surface grinding is the grinding of simple plain surfaces.

Tool and Cutter Grinding

Tool and cutter grinding is the generally complex operation of forming and resharpening the cutting edges of tool and cutter bits, gages, milling cutters, reamers, and so forth.

The grinding wheel for any grinding operation should be carefully chosen and the workpiece set up properly in the grinding machine. Grinding speeds and feeds should be selected for the particular job. Whenever practical, a coolant should be applied to the point of contact of the wheel and the workpiece to keep the wheel and workpiece cool, to wash away the loose abrasive, and to produce a better finish.

GRINDING SPEEDS AND FEEDS

In grinding, the speed of the grinding wheel in SFPM and the feed of the grinding wheel are as important as, and sometimes more important than, proper wheel selection. Occasionally, the grinder spindle should be checked with a tachometer to make sure it is running at its specified RPM. Too slow a speed will result in waste of abrasive, whereas an excessive speed will cause a hard grinding action and glaze the wheel, making the grinding inefficient. The feed of the grinding wheel will determine to a cetain extent the finish produced on the work and will vary for different types and shapes of grinding wheels.

Factors Governing Speed

W A R N I N G
If a wheel is permitted to exceed the maximum safe speed, it may disintegrate and cause injury to the operator and damage to the grinding machine

The various factors governing the speed in SFPM of a grinding wheel are as described below.

Safety

The grinding wheel should never be run at speeds in excess of manufacturer's recommendations, Usually, each grinding wheel has a tag attached to it which states the maximum safe operating speed.

Condition of the Machine

Modern grinding machines and machines that are in good condition can safely turn a grinding wheel at speeds greater than machines that are older or in poor condition. Most grinding machines are equipped with spindle bearings designed for certain speeds which should not be exceeded. Poor quality will result from vibrations caused by inadequate rigidity or worn bearings that are not in the best condition. High speeds will intensify these defects.

Material Being Ground

The material being ground will generally determine the grain, grade, structure, and bond of wheel to be selected. For example, if the wheel is too soft for the material being cut, an increase in speed will make the wheel act harder. Conversely, if the wheel is too hard, as lower speed will make the wheel act softer.

Type of Grinding Wheel

The type of grinding wheel employed for a particular operation is one of the major considerations in the proper selection of cutting speed. In general practice, the wheel will be selected for the material to be cut. The recommended cutting speed can then be determined by the wheel type, bond, and grade of hardness (Table 5-1 in Appendix A).

Calculating Wheel Size or Speeds

Both cutting speeds in SFPM and rotational speed in RPM must be known to determine the size wheel to be used on a fixed-speed grinding machine. To determine the grinding wheel size, use the following formula:

$$D = \frac{12 \times SDFPM}{RPM}$$

Where SFPM = Cutting speed of wheel (In surface feet per minute).
RPM = Revolutions per minute of wheel.
D = The calculated wheel diameter (in inches).

To obtain the cutting speed in SFPM when the wheel diameter and RPM are given, use the same formula in a modified form:

$$SFPM = \frac{D \times RPM}{12}$$

To obtain the rotational speed in RPM when the wheel diameter and desired cutting speed are known use the formula in another modified form:

$$RPM = \frac{12\ SFPM}{D}$$

NOTE: As a grinding wheel wears down and as it is continually trued and dressed, the wheel diameter decreases, resulting in loss of cutting speed. As this occurs, it is necessary to increase the rotational speed of the wheel or replace the wheel to maintain efficiency in grinding.

Work Speed for Cylindrical Grinding

In cylindrical grinding, it is difficult to recommend any work speeds since these are dependent upon whether the material is rigid enough to hold its shape, whether the diameter of the workpiece is large or small, and so forth. Listed below are areas to consider when performing cylindrical grinding:

- The larger the diameter of the workpiece, the greater is its arc of contact with the wheel. The cutting speed suitable for one diameter of workpiece might be unsuitable for another.
- The highest work speed that the machine and wheel will stand should be used for roughing.
- The following cylindrical work speeds are only typical: steel shafts, 50 to 55 FPM; hard steel rolls, 80 to 85 FPM; chilled iron rolls, 80 to 200 FPM; cast iron pistons, 150 to 400 FPM; crankshaft bearings, 45 to 50 FPM; and crankshaft pins, 35 to 40 FPM.
- Higher work speeds increase the cutting action of the wheel and may 'indicate that a harder wheel and a smaller depth of cut be used to reduce wheel wear.

Work Speed for Surface Grinding

Surface grinding machines usually have fixed work speeds of approximately 50 SFPM or have variable work speed ranges between 0 and 80 SFPM. As with cylindrical grinding, the higher work speeds mean that more material is being cut per surface foot of wheel rotation and therefore more wear is liable to occur on the wheel.

Feeds

The feed of the grinding wheel is the distance the wheel moves laterally across the workpiece for each revolution of the piece in cylindrical grinding or in each pass of the piece in surface grinding. The following methods are recommended for determine feeds:

- The feed should be proportional to the width of wheel face and the finish desired. In general, The narrower the face of the wheel, the slower must be the traverse speed; the wider the wheel face the faster can be the traverse speed.
- For roughing, the table should traverse about three quarter the wheel width per revolution or pass of the workpiece.
- For an average finish, the wheel should traverse one-third to one-half the width of the wheel per revolution or pass of the workpiece.
- In surface grinding with wheels less than 1 inch in width, the table traverse speed should be reduced about one-half.

Depth of Cut

Methods for determining depth of cuts are recommended for determining feeds.

- In roughing, the cut should be as deep as the grinding wheel will stand, without crowding or springing the work. The depth of cut also depends on the hardness of the material. In cylindrical grinding, in addition to these factors, the cut depends on the diameter of the work. In any case, experience is the best guide. Generally, a cut of 0.001 to 0.003 inch in depth is used, depending on the size and condition of the grinding machine.
- For finishing, the depth of cut is always slight, generally from 0.0005 inch to as little as 0.00005 inch.
- An indication of the depth of cut is given by the volume of sparks thrown off. Also, an uneven amount of sparks indicates that the workpiece or wheel is not concentric.

COOLANTS

Most grinding machines are equipped with coolant systems. The coolant is directed over the point of contact between the grinding wheel and the work. This prevents distortion of the workpiece due to uneven temperatures caused by the cutting action. In addition, coolant keeps the chips washed away from the grinding wheel and point of contact, thus permitting free cutting.

Clear water may be used as a coolant, but various compounds containing alkali are usually added to improve its lubricating quality and prevent rusting of the machine and workpiece.

An inexpensive coolant often used for all metals, except aluminum, consists of a solution of approximately 1/4 pound of sodium carbonate (sal soda) dissolved in 1 gallon of water.

Another good coolant is made by dissolving soluble cutting oil in water. For grinding aluminum and its alloys, a clear water coolant will produce fairly good results.

OFFHAND GRINDING

Offhand grinding is the process of positioning and feeding the workpiece against a grinding wheel by hand. Offhand grinding is used for reducing weld marks and imperfections on workpieces, and general lathe tool, planer tool, shaper tool, and drill grinding. Deciding depth of cut and feed is based on the operator's knowledge of grinding.

Offhand grinding is performed on utility grinding machines which generally have fixed spindle speeds and fixed wheel size requirements, so that the cutting speed of the wheel is constant and cannot be changed for different materials. Therefore, the operator must use care in feeding and not overload the wheel by taking too heavy a cut, which would cause excess wear to the grinding wheel. Similarly, he must be careful not to glaze the wheel by applying excessive pressure against the wheel.

The one variable factor in most offhand grinding is the selection of grinding abrasive wheels, although limited to one diameter. For example, a softer or harder wheel can be substituted for the standard medium grade wheel when conditions and materials warrant such a change. Lathe tool grinding is described in Chapter 7. Drill sharpening and drill grinding attachments and fixtures are described in Chapter 4.

TOOL AND CUTTER GRINDING

Grinding Milling Cutters

Milling cutters must be sharpened occasionally to keep them in good operating condition. When grinding milling cutters, care must be exercised to maintain the proper angles and clearances of the cutter. Improper grinding can result in poor cutting edges, lack of concentricity, and loss of form in the case of formed tooth cutters. Milling cutters cannot be sharpened by offhand grinding. A tool and cutter grinding machine must be used.

Bench-Type Tool and Cutter Grinding Machine

The bench-type tool and cutter grinding machine described here is typical of most tool and cutter grinding machines. It is designed for precision sharpening of milling cutters, spot facers and counterbores, reamers, and saw blades. The grinding machine contains a 1/4-HP electric motor mounted to a swivel-type support bracket which can be adjusted vertically and radically on the grinder column. The column is fixed to the grinder base which contains T-slots for attaching grinder fixtures used to support the tools that are to be ground.

The motor shaft or wheel spindle accepts grinding wheels on each end. One end of the spindle contains a wheel guard and tool rest for offhand grinding of lathe tools and so forth. Cup, straight, and 15º bevel taper abrasive grinding wheels are used with this machine. Fixtures used for grinding tools and cutters include a center fixture for mounting reamers, taps, and so forth between centers; an outside diameter fixture for chucking arbor-type milling cutters and shanked peripheral cutting edge tools; and an end mill fixture for supporting end cutting tools to the grinder base.

Grinding Formed Milling Cutters

Use the following methods and procedures when grinding formed milling cutters.

- Formed milling cutters are usually ground with a cup or dish grinding wheel of medium grain (36 to 60 grain).
- It is important that formed cutters be ground only on the face, never on the land. Grinding the land destroys the shape of the cutter. Also important, the face must be ground so that the exact rake angle is retained or the cutter will cut unevenly.
- Formed cutters are ground by radial grinding. Correctly ground cutter teeth are shown at A and B, Figure 5-17. At A, the tooth is ground without rake; only cutters originally shaped without rake should be reground without rake. At B, a correctly ground tooth is shown with positive rake. Rake angles are commonly between 10° and 15° from the radius passing through the cutting edge, 12° being the most commonly used angle. The tooth shown at C, has excessive positive rake this tooth will gouge, making an excessively deep cut, and the cutting edge will dull rapidly with hard materials. The tooth shown at D, Figure 5-17 has negative rake; this tooth will drag and make a shallow cut.

On new cutters, the back (Figure 5-17) of each tooth should be ground accurately before grinding the face. This procedure is recommended so that an accurate reference surface is provided for the index finger of the grinding machine attachment. Another method of assuring this alignment is by mounting another cutter containing the same number of teeth on the same arbor with the cutter being ground. With the second cutter properly aligned and locked in place, the index finger can be used against the second cutter's teeth.

NOTE: A positive rake angle is a rake angle that increases the keenness of the cutting edge. A negative rake angle is one that decreases or makes the cutting edge more blunt.

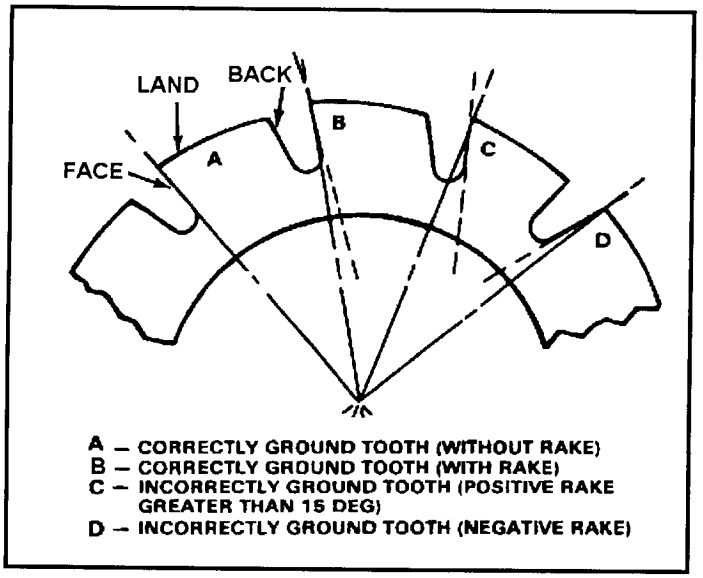

Figure 5-17. Correct and incorrect grinding of formed milling cutter teeth.

The grinding wheel should be set up so that the wheel traverse is aligned with the face of one tooth (Figure 5-18). The alignment should be checked by moving the grinding wheel away from the cutter, rotating the cutter, and rechecking the traverse on another tooth. After this alignment is accomplished, the depth of cut, is regulated by rotating the cutter slightly, thus maintaining the same rake angle on the sharpened cutter. The depth of cut should never be obtained by moving the cutter or grinding wheel in a direction parallel to the wheel spindle. Doing this would change the rake angle of the cutter.

Grinding Plain Milling Cutters

Plain milling cutters with saw-tooth type teeth are sharpened by grinding the lands on the periphery of the teeth. The lands may be ground using a straight grinding wheel or a cup-shaped grinding wheel.

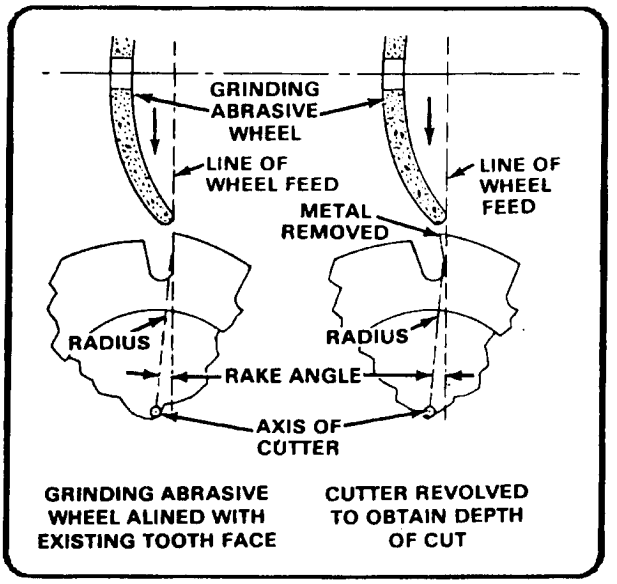

Figure 5-18. Aligning formed milling cutter and grinding wheel.

The important consideration when grinding this type of cutter is the primary clearance angle or relief angle of the land (Figure 5-19). If the primary clearance angle is too large, the cutting edge will be too sharp and the cutter will dull quickly. If the primary clearance angle is too small, the cutter will rub rather than cut and excessive heat will be generated.

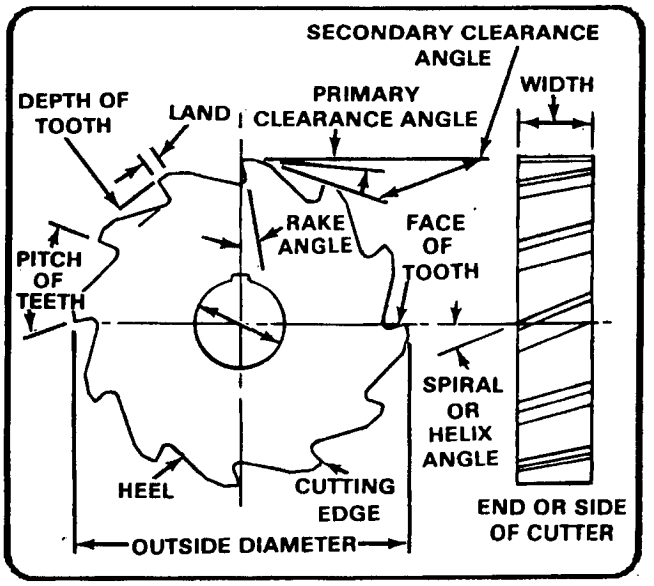

Figure 5-19. Milling, cutter nomenclature.

The primary clearance angle (Figure 5-19) should be between 3° and 5° for hard materials and about 10° for soft materials like aluminum. For cutters under 3 inches in diameter, a larger clearance angle should be used: 7° for hard materials and 12° for soft materials.

The clearance angle for end and side teeth should be about 2° and the face of these cutters should be ground 0.001- or 0.002-inch concave toward the center to avoid any drag.

To grind the lands of milling cutter teeth to primary clearance angle, the teeth are positioned against the grinding wheel below the wheel's axis (Figure 5-20).

To obtain the primary clearance angle when grinding with a straight wheel, lower the indexing finger or raise the grinding wheel a distance equivalent to 0.0088 times the clearance angle times the diameter of the grinding wheel. For example, to find the distance below center of the indexing finger (Figure 5-20) for a cutter with a 5° clearance angle, being ground by a straight wheel 6 inches in diameter, the calculation is as follows: 0.0088 x 5 x6 = 0.264 inch. The indexing finger would then be set 0.264 inch below the wheel axis. The milling cutter axis should also be 0.264 inch below the wheel axis.

To obtain the primary clearance angle when grinding with a cup wheel, the formula for a straight wheel is used except that instead of wheel diameter being used in the formula, the cutter diameter is used. In this case, the index finger is set to the calculated distance below the axis of the milling cutter (Figure 5-20) instead of below the axis of the wheel.

Table 5-3 in Appendix A is provided to save time in calculating distances below center for primary clearance angles. The same figures can be used for straight wheel or cup wheel grinding, substituting the wheel diameter for the cutter diameter or vice versa.

The land of each tooth (Figure 5-19) should be from 1/32 to 1/16-inch wide, depending upon the type and size of the milling cutter. As a result of repeated grinding of the primary clearance angle, the land may become so wide as to cause the heel of the tooth to drag on the workpiece. To control the land width, a secondary clearance angle (Figure 5-19) is ground. This angle is usually ground to 30°, although the exact angle is not critical. Generally, an angle between 20° and 30° is sufficient to define the land of the tooth.

Grinding End Milling Cutters

The peripheral teeth of end milling cutters are ground in the same manner as the teeth of a plain milling cutter. When grinding the end teeth of coarse-tooth end milling cutters, the cutter is supported vertically in a taper sleeve of the end mill fixture and then tilted to obtain the required clearance angle. The end mill fixture is offset slightly to grind the teeth 0.001 to 0.002 inch lower in the center to prevent dragging. A dish-shaped grinding wheel revolving about a vertical spindle is used to grind end milling cutters.

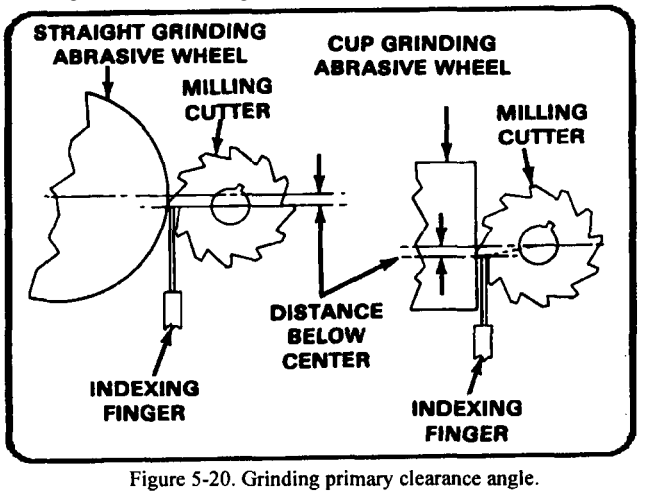

Figure 5-20. Grinding primary clearance angle.

Removing the Burrs

After the milling cutter is ground, the cutting edges should be honed with a fine oilstone to remove any burrs caused by grinding. This practice will add to the keenness of the cutting edges and keep the cutting edges sharper for a longer period of time.

CYLINDRICAL GRINDING

Cylindrical grinding is the practice of grinding cylindrical or conical workplaces by revolving the workpiece in contact with the grinding wheel. Cylindrical grinding is divided into three general operations: plain cylindrical, conical grinding (taper grinding), and internal grinding. The workpiece and wheel are set to rotate in opposite directions at the point of contact (Figure 5-21).

Plain Cylindrical Grinding

The step-by-step procedure for grinding a straight shaft is given below. The shaft has been roughly turned prior to grinding.

- Check and grind headstock and tailstock centers if necessary.
- Check drilled centers of workpiece for accuracy.
- Place a grinding wheel of the proper grain, grade, structure, and bond on the wheel spindle.
- Place wheel guards in position to cover the wheel adequately.

Set the proper wheel speed on grinding machine (Table 5-2 in Appendix A).

- Place the diamond dresser and holder on the machine table and true and dress the grinding wheel.
- Mount the headstock and footstock on the table.
- Attach the proper size drive dog on the headstock end of the workpiece.
- Mount the workpiece between headstock and tailstock centers. Use lubricant (oil and white lead mixture) on tailstock center. Make sure centers fit drill center holes correctly with no play.
- Set the proper rotational work speed on the wheel head. The general range of work speed for cylindrical grinding is 60 to 100 SFPM. Heavy rough grinding is sometimes performed at work speeds as low as 20 or 30 SFPM. Soft metals such as aluminum are sometimes ground at speeds up to 200 SFPM.
- Position the table trip dogs to allow minimum table traverse. The wheel should overlap each end of the workpiece not more than one-half the wheel width to assure a uniform straight cut over the length of the workpiece.
- Calculate the table traverse feed using this formula.

TT = (WW X FF X WRPM) + 12
Where TT = Table travel in feet per minute
WW = Width of wheel
FF = Fraction of finish
WRPM = Revolutions per minute of workpiece
12 = Constant (inches per foot)

The fraction of finish for annealed steels is 1/2 for rough grinding and 1/6 for finishing; for hardened steels, the rate is 1/4 for rough grinding and 1/8 for finishing.

For example, a l-inch-wide wheel is used to rough grind a hardened steel cylinder with a work RPM of 300.

Table travel =
(1 x 1/4 x 300) ÷ 12 = (75) ÷ 12 = 6.25 FPM

After the calculations have been completed, set the machine for the proper traverse rate, turn on the table traverse power feed, and grind the workpiece.

Check the workpiece size often during cutting with micrometer calipers. Check the tailstock center often and readjust if expansion in the workpiece has caused excessive pressure against the drilled center in the workpiece.

The finishing cut should be slight, never greater than 0.001 inch, and taken with a fine feed and a fine grain wheel.

If two or more grinding wheels of different grain size are used during the grinding procedure, each wheel should be dressed and trued as soon as it is mounted in the grinding machine.

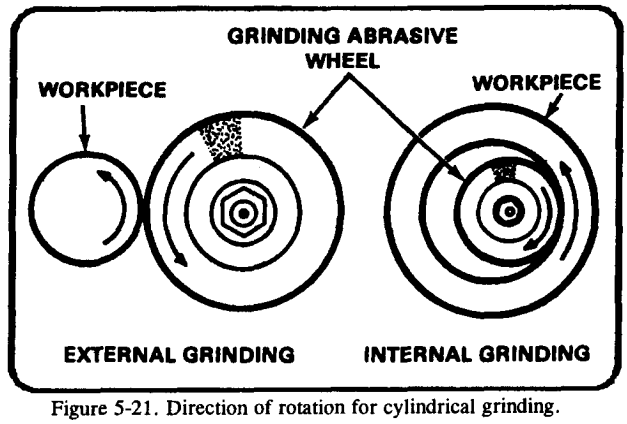

Figure 5-21. Direction of rotation for cylindrical grinding.

Conical Grinding

Most conical grinding is performed in the same manner as plain cylindrical grinding. Once the grinding machine is set up, the table is swiveled until the correct taper per inch is obtained. Steep conical tapers are normally ground by swiveling the headstock to the angle of taper. Whichever method is used, the axis of the grinding wheel must be exactly at center height with the axis of the work.

INTERNAL GRINDING

The internal grinding attachment is bolted to the wheel head on the universal tool and cutter grinder. The RPM is increased by placing a large pulley on the motor and a small pulley on the attachment.

The workpiece should be set to rotate in the direction opposite that of the grinding wheel. The following step-by-step procedure for grinding the bore of a bushing is outlined below as an example.

- Set up the workpiece in an independent chuck and check and adjust its alignment.
- Mount the internal grinding attachment to the wheel head and adjust its position so that the grinding wheel is centered vertically with the mounted workpiece.
- True and dress the grinding wheel.
- Set the proper wheel speed on the grinding machine by adjusting the pulleys and belts connecting the wheel spindle to the drive motor shaft.
- Set the proper rotational work feed. The speed should be 60 to 100 SFPM.
- Be sure sufficient clearance is allowed when setting the traversing speed so that the grinding wheel will not strike any part of the workpiece or setup when the wheel is fed into and retracted from the workpiece.

If two or more grinding wheels are used to complete internal grinding, true each wheel after mounting it to the spindle of the internal grinding attachment.

SURFACE GRINDING

Surface grinding or grinding flat surfaces, is characterized by a large contact area of the wheel with the workpiece, as opposed to cylindrical grinding where a relatively small area of contact is present. As a result, the force of each abrasive grain against the workpiece is smaller than that applied to each grain in cylindrical grinding. In surface grinding the grinding wheel should be generally softer in grade and wider in structure than for cylindrical grinding.

OPERATION

The following sequence is provided as a step-by-step example of a typical surface grinding operation.

- Adjust the surface grinding machine so that grinding head and worktable are absolutely parallel.
- Place a grinding wheel of the proper grain, grade, structure, and bond on the wheel spindle.
- Place the guard over the wheel and check security of all adjustable members of the grinding machine for rigidity and lack of backlash.
- True and dress the grinding wheel.
- Mount the workpiece to the worktable. Make sure the surface to be ground is parallel to the worktable and the grinding wheel.
- Adjust wheel speed, work speed, and work feed.
- Proceed with grinding, adjusting depth of cut as necessary. Check for accuracy between each cut and determine that the workpiece is square and the wheel is not out of alignment. If it is necessary to use more than one grinding wheel to complete the grinding, each wheel should be trued and dressed after it is mounted.

SPECIAL OPERATIONS ON GRINDING MACHINES

CLEANING

A wire wheel mounted to a utility grinding machine is used for cleaning operations such as removing rust, paint, or dirt from metal objects. If the utility grinding machine on which the wire wheel is to be mounted is equipped with wheel guards and tool rests, these parts should be removed or swung out of the way so that the objects to be cleaned can be brought against the wheel without interference.

To clean objects with a wire wheel, place the object firmly against the wire wheel. Work the object back and forth across the face of the wheel until all traces of rust, paint, or dirt are removed. Avoid excessive pressure against the face of the wire wheel to prevent spreading the steel wires. Keep the point of contact below the center of the wheel to avoid kickback of the workpiece.

POLISHING, BUFFING, AND LAPPING

Polishing, buffing, and lapping are three closely related methods for finishing metal parts. The three different methods of finishing are listed below.

Polishing

Polishing is an abrading process in which small amounts of metal are removed to produce a smooth or glossy surface by application of cushion wheels impregnated or coated with abrasives. Polishing may be used for reduction or smoothing of the surface to a common level for high finish where accuracy is not important, or it may be employed for removing relatively large amounts of material from parts of irregular contour. Rough polishing is performed on a dry wheel using abrasives of No. 60 grain (60 grains per linear inch) or coarser. Dry finish polishing is a similar process where No 70. grain to No. 120 grain abrasives are used. Oiling is the term applied to polishing with abrasive finer than No. 120 grain. In this process, the abrasive is usually greased with tallow or a similar substance.

Buffing

Buffing is a smoothing operation which is accomplished more by plastic flow of the metal than by abrading. The abrasives are generally finer than those used in polishing and instead of being firmly cemented to the wheel are merely held by a "grease cake" or similar substance. Buffing is used to produce a high luster or color without any particular regard to accuracy of dimension or plane. Cut down buffing produces a rapid smoothing action with fast-cutting abrasives and relatively hard buffing wheels. It is accomplished with high speeds and heavy pressures to allow a combined plastic flow and abrading action to occur. Color buffing is the imparting of a high luster finish on the workpiece by use of soft abrasives and soft buffing wheels.

Lapping

Lapping, like polishing, is an abrading process in which small amounts of material are removed. Unlike polishing, however, lapping is intended to produce very smooth, accurate surfaces, and is never used instead of polishing or buffing when clearance is the only consideration. Lapping is accomplished by charging metal forms called laps with flour-fine abrasives and then rubbing the workpiece with the lap. The lap may be of any shape and may be designed to fit into most power machine tools. The only requirements of the lap are that it be of softer material than the material being lapped, and that it be sufficiently porous to accept the imbedded abrasive grain. Common materials for laps are soft cast iron, copper, brass, and lead. Some laps are flat and others are cylindrical to fit on steel arbors for internal lapping of bores. A cutting oil is recommended for most lapping operations.

Polishing and Buffing Speeds

The proper speed for polishing and buffing is governed by the type of wheel, workpiece material, and finish desired. For polishing and buffing in general where the wheels are in perfect balance and correctly mounted, a speed of approximately 1,750 RPM is used for 6-inch to 8-inch wheels; up to 6-inch wheels use 3,500 RPM. If run at a lower rate of speed, the work tends to tear the polishing material from the wheel too readily, and the work is not as good in quality.

Polishing Abrasives

The abrasive grains used for polishing must vary in characteristics for the different operations to which they are applied. Abrasive grains for polishing are supplied in bulk form and are not mixed with any vehicle. The abrasives, usually aluminum oxide or silicon carbide, range from coarse to fine (1 to 20 grains per inch).

Buffing Abrasives

Buffing abrasives are comparatively fine and are often made up in the form of paste, sticks, or cakes; the abrasive being bonded together by means of grease or a similar vehicle. The abrasive sizes for buffing are 280, 320, 400, 500, and 600. Some manufacturers use letters and numbers to designate grain size such as F, 2F, 3F, 4F, and XF (from fine to very fine). Pumice, rottenstone, and rouge are often used as buffing abrasives.

Lapping Abrasives

Only the finest abrasives are used for lapping. These may be either natural or artificial. Abrasives for lapping range from No. 220 to No. 600 or No. 800 which are very fine flours. Lapping compounds are generally mixed with water or oil so that they can be readily applied to the lap.

Chapter 6

SAWING MACHINES

GENERAL

PURPOSE

The sawing machine is a machine tool designed to cut material to a desired length or contour. It functions by drawing a blade containing cutting teeth through the workpiece. The sawing machine is faster and easier than hand sawing and is used principally to produce an accurate square or mitered cut on the workpiece.

TYPES

The power hacksaw and the bandsaw are two common types of sawing machines used to cut metal in the machine shop. The power hacksaw uses a reciprocating (back and forth) cutting action similar to the one used in a hand hacksaw. The power hacksaw is used for square or angle cutting of stock. The band saw uses a continuous band blade. A drive wheel and an idler wheel support and drive the blade.

POWER HACKSAW MACHINES

DESCRIPTION

All power hacksaw machines are basically similar in design. Figure 6-1 shows a typical power hacksaw and identifies its main parts, which are discussed below.

Base

The base of the saw usually contains a coolant reservoir and a pump for conveying the coolant to the work. The reservoir contains baffles which cause the chips to settle to the bottom of the tank. A table which supports the vise and the metal being sawed is located on top of the base and is usually referred to as part of the base.

Vise

The vise is adjustable so that various sizes and shapes of metal may be held. On some machines the vise may be swiveled so that stock may be sawed at an angle. The size of a power hacksaw is determined by the largest piece of metal that can be held in the vise and sawed.

Frame

The frame of the saw supports and carries the hacksaw blade. The machine is designed so that the saw blade contacts the work only on the cutting stroke. This. action prevents unnecessary wear on the saw blade. The cutting stroke is on the draw or back stroke.

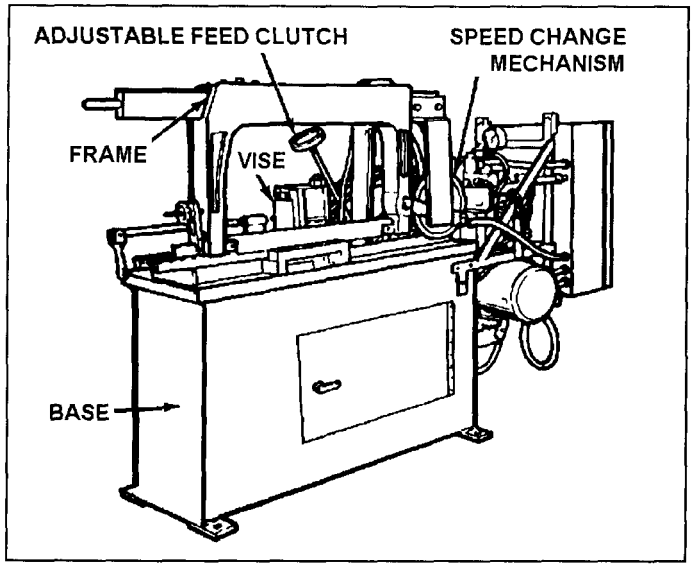

Figure 6-1. Power hacksaw.

Some machines feed by gravity, the saw frame having weights that can be shifted to give greater or less pressure on the blade. Other machines are power fed with the feed being adjustable. On these machines, the feed is usually stopped or reduced automatically when a hard spot is encountered in the material, thus allowing the blade to cut through the hard spot without breaking.

SPEED-CHANGE MECHANISM

The shift lever allows the number of strokes per minute to be changed so that a variety of metals may be sawed at the proper speeds. Some saws have a diagram showing the number of strokes per minute when the shift lever is in different positions; others are merely marked "F," M," and "S" (fast, medium, and slow).

ADJUSTABLE FEED CLUTCH

The adjustable feed clutch is a ratchet-and-pawl mechanism that is coupled to the feed screw. The feed clutch may be set to a desired amount of feed in thousandths of an inch. Because of the ratchet-and-pawl action, the feed takes place at the beginning of the cutting stroke. The clutch acts as a safety device and permits slippage if too much feed pressure is put on the saw blade. It may also slip because of a dull blade or if too large a cut is attempted. This slippage helps prevent excessive blade breakage.

BANDSAW MACHINES

Metal-cutting bandsaw machines fall into two basic categories: vertical machines (Figure 6-2) and horizontal machines (Figure 6-3). Band saws use a continuous saw blade. Chip removal is rapid, because each tooth is a precision cutting tool and accuracy can be held to close tolerances eliminating or minimizing many secondary machining operations.

VERTICAL BANDSAWING MACHINE

The metal-cutting vertical band sawing machine, also called a contour machine, is made in a variety of sizes and models by several manufacturers. The size of a contour machine is determined by the throat depth, which is the distance from the saw band to the column. Figure 6-2 shows a typical contour machine and identifies its main parts, which are discussed below.

- The head is the large unit at the top of the contour machine that contains the saw band idler wheel, the drive motor switch, the tension adjustment handwheel and mechanism, a flexible air line (directs a jet of air at the work to keep layout lines free from chips), and the adjustable post which supports the upper saw guide. The job selector dial is also located on the head.

- The column contains the speed indicator dial, which is driven by a cable from the transmission and indicates the speed in feet per minute (FPM). The butt welder is also mounted on the column.

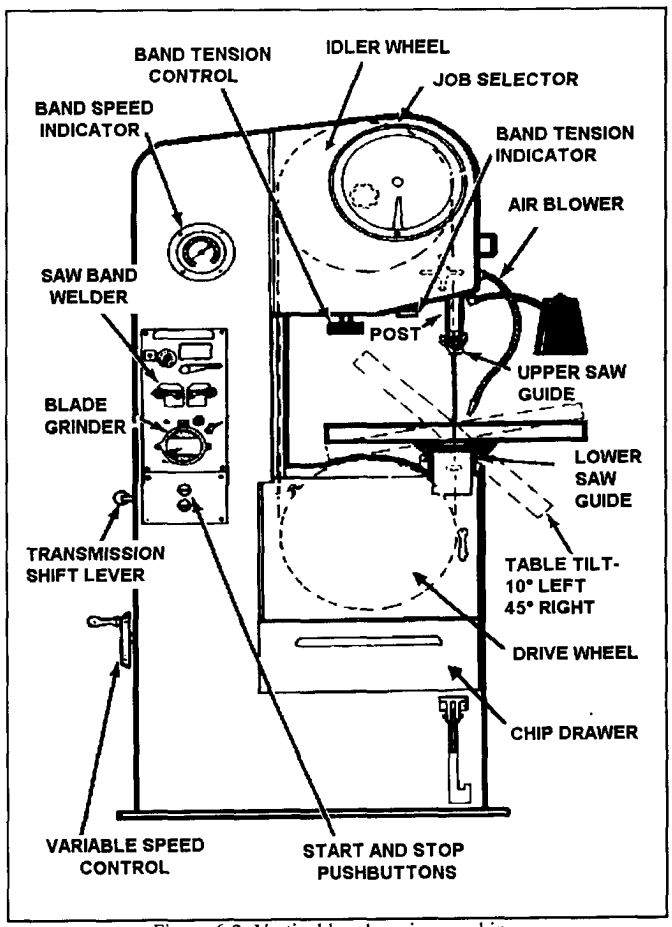

Figure 6-2. Vertical band sawing machine.

- The base contains the saw band drive wheel, the motor, and the transmission. The transmission has two speed ranges. The low range gives speeds from 50 FPM to 375 FPM. The high range gives speeds from 260 FPM to 1,500 FPM. A shift lever on the back of the base can be placed in the high, low, or neutral position. Low is recommended for all speeds under 275 FPM. The base also supports the table and contains the lower saw band guide, which is mounted immediately under the table slot. The power feed mechanism is located within the base, and the feed adjustment handle and foot pedal are located on the front of the base.

VARIABLE SPEED UNIT

The variable speed unit is located within the base of the machine. This unit consists of two V-type pulleys which are mounted on a common bearing tube. A belt on one pulley is driven by the transmission, while the belt on the other pulley drives the saw band drive wheel. The two outside cones of the pulleys are fixed, but the middle cone is shifted when the speed change wheel is turned. A shift in the middle cone causes the diameter of one pulley to increase and the diameter of the other pulley to decrease. This slowly changes the ratio between the two pulleys and permits a gradual increase or decrease in the speed of the machine.

HORIZONTAL BANDSAW MACHINE

The horizontal band sawing machine does the same job as the power hacksaw but does it more efficiently. The blade of the bandsaw is actually a continuous band which revolves around a drive wheel and idler wheel in the band support frame. Two band guides use rollers to twist the band so that the teeth are in the proper cutting position. The guides are adjustable and should be adjusted so that they are just slightly further apart than the width of the material to be cut. This will give maximum support to the saw band and help assure a straight cut.

The vise on the horizontal bandsaw is much like the one on the power hacksaw. However, the horizontal bandsaw has a much greater capacity for large stock than does the power hacksaw. The stationary jaw can be set at several angles. The movable jaw adjusts automatically to whatever position the stationary jaw is in when the vise handwheel is tightened.

The horizontal bandsaw is operated hydraulically by controls on a control box, which is located on the front side of the machine. A motor and pump assembly supplies hydraulic fluid from a reservoir in the base to a cylinder, which raises and lowers the support arm and also controls the feed pressure and band tension. A speed and feed chart is sometimes provided on the machine, but when it is not, consult the operator's manual for the proper settings for sawing.

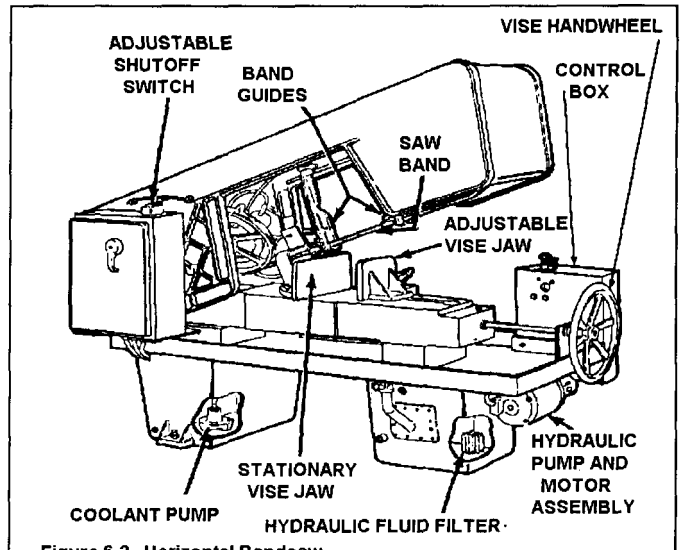

Figure 6-3. Horizontal Bandsaw.

A coolant pump is located in one of the legs of the base, which serves as a coolant reservoir. The coolant cools the saw band and also washes away chips from the cut before they can clog the band.

SAFETY PRECAUTIONS

Sawing machines have some special safety precautions that must be observed. These are in addition to those safety precautions described in Chapter 1. Here are some safety precautions that must be followed:

- Keep hands away from the saw blade of the hacksawing machine or bandsawing machine when in operation.
- Ensure the power supply is disconnected prior to removal or installation of saw blades.
- Use a miter guide attachment, work-holding jaw device, or a wooden block for pushing metal workpieces into the blade of the bandsaw wherever possible. Keep fingers well clear of the blade at all times.
- When removing and installing band saw blades, handle the blades carefully. A large springy blade can be dangerous if the operator does not exercise caution.

TOOLS AND EQUIPMENT

POWER HACKSAW BLADES

Power hacksaw blades differ from hand hacksaw blades in that they are generally heavier, made in longer sizes, and have fewer teeth per inch. Hacksaw blades are discarded when they become dull; sharpening is not practical.

Materials commonly used in manufacturing power hacksaw blades are high-speed tungsten steel and high-speed molybdenum steel. On some blades only the teeth are hardened, leaving the body of the blade flexible. Other blades are hardened throughout.

The set is the amount of bend given the teeth. The set makes it possible for a saw to cut a kerf or slot wider than the thickness of the band back (gage), thus providing side clearance.

This is the pattern in which the teeth are set. There are three set patterns: raker, wave, and straight, as shown in Figure 6-4.

The pitch of hacksaw blade teeth (Figure 6-5) is expressed as the number of teeth per linear inch of blade. For example, a blade having 10 teeth per inch is said to be 10 pitch.

Power hacksaw blades are coarser in pitch (fewer teeth per inch) than hand hacksaw blades. Common pitches for power hacksaw blades range from 4 to 14 teeth per inch.

The following are guidelines for the selection of power hacksaw blades.

- Select power hacksaw blades for material to be cut.
- Soft materials require a coarser blade to provide adequate spaces between the teeth for removal of chips. Hard material requires a finer blade to distribute the cutting pressure to a greater number of teeth, thereby reducing wear to the blade.
- At least three teeth must be in contact with the workpiece at all times or the blade will snag on the workpiece and break teeth from the blade. Therefore, a blade must be selected with sufficient pitch so that three or more teeth will be in contact with the workpiece, no matter what type of material is being cut.

Figure 6-5 is provided to assist in the proper selection oxf power hacksaw blades. Note that sheet metal and tubing are listed separately from solid stock. It is assumed that solid stock will be sufficiently thick that three or more teeth will be in contact with the stock at all times.

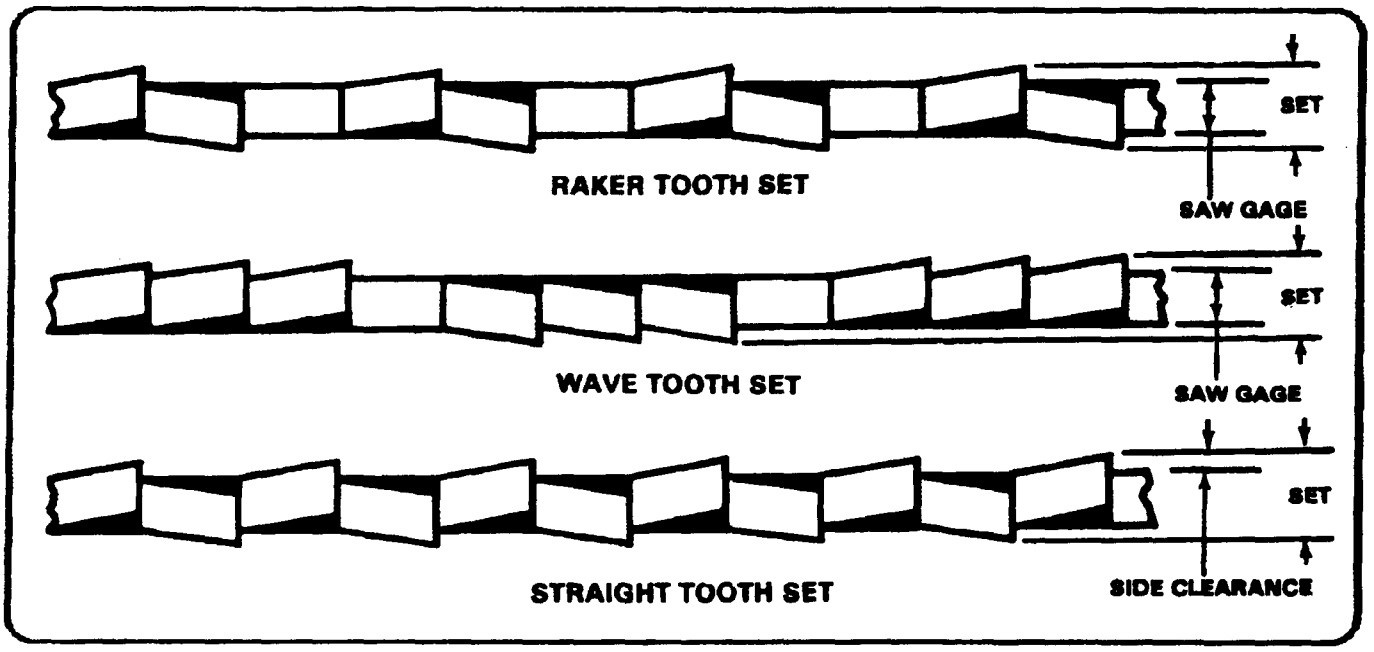

Figure 6-4. Set pattern.

MATERIAL	HACKSAW BLADE TEETH PER INCH (PITCH)
SHEET METAL	14
SOLID STOCK: 1	
ALUMINUM	4
BRASS	10
BRONZE	4
CAST IRON	4
COPPER	4
STEEL, ALLOY	6
STEEL, HIGH-SPEED	6
STEEL, MACHINE	4
STEEL, STAINLESS	6
STEEL, TOOL (ANNEALED)	6
STEEL, TOOL (UNANNEALED)	4
TUBING, THIN	14
TUBING, HEAVY	10

1. Three or more teeth must contact the workpiece at all times to prevent blade damage. If the recommended pitch for a material fails to meet this requirement, a blade with more teeth to the inch should be used.

Figure 6-5. Selection of power hacksaw blades.

BANDSAW BLADES

General

Bandsaw blades are manufactured in two forms. They are supplied in rolls of 50 to 500 feet for use on machines that have butt welders for forming their own blade bands. Bandsaw blades are also supplied in continuous welded bands for machines having no provisions for welding.

Materials

Bandsaw blades are made from special alloy steels. The blades are made flexible by annealing the body of the blade and hardening only the teeth.

Set

Metal cutting bandsaw blades have their teeth bent (Figure 6-4). This bend produces a kerf slightly wider than the thickness of the blade, which prevents the blade from being pinched by the stock. There are three set patterns: raker, wave, and straight, as shown in Figure 6-4.

Pitch

The pitch of bandsaw blades is expressed as the number of teeth per linear inch of the blade. Metal cutting blades range from 6 to 32 teeth per inch, the coarser tooth blades being used for sawing large stock and soft metals.

Selection of Bandsaw Blades

Select bandsaw blades according to the type of material to be cut, the thickness of the material to be cut, and the sawing operation to be performed. Always use the widest and thickest saw band possible. However, consider the curvature of the cut, since wide saw blades cannot cut sharp curves. Figure 6-6 shows saw band selection for various radii.

For general sawing, use the raker set pattern. The wave set pattern is used where thin work sections are encountered during the cut, such as tubing, angles, and channels.

Three teeth of the bandsaw blade must be in contact with the workpiece at all times to prevent chatter and shearing off teeth. Therefore, use fine tooth blades to cut sheet metal and

tubing. If the sheet metal is too thin to meet this requirement with the finest tooth blade available, place the metal between plywood fiberboard, or thicker metal. Figure 6-7 is a guide for selecting the proper pitch band saw blade for different metals and metal thickness.

The finish depends largely upon the saw pitch. The faster the saw speed and the finer the sawpitch, the finer the finish. Lubricating helps to improve the finish. A fine saw pitch, high velocity, and light feed produce the finest finish.

Bandsaw Blade Wear

Bandsaw blades naturally become dull from prolonged use, but some conditions promote greater than normal wear on the blades. Blades dull quickly if used at too high a speed for the material being cut. Also, if the material to be cut is too hard for the pitch of the blade, abnormal wear will result. The most common cause of premature blade dulling occurs from using too fine a pitch blade and from feeding too heavily.

The following symptoms indicate a dull bandsaw blade. When these symptoms are noticed, the blade should be replaced.

- It becomes difficult to follow a line, the blade being forced to one side or the other.
- The chips are granular (except for cast iron, which produces granular chips with both sharp and dull blades).
- The bandsaw blade cuts slowly or not at all when the workpiece is fed by hand.
- With the machine stopped or the bandsaw blade removed, run a finger slowly over the teeth in the cutting direction. If sharp edges are not felt the blade is dull.

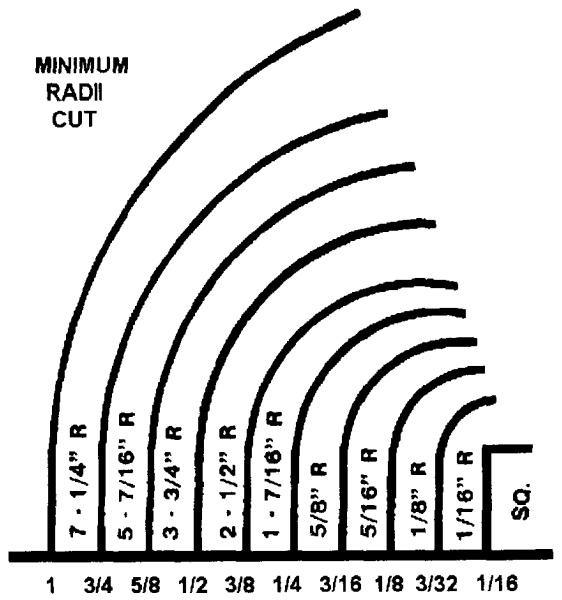

Figure 6-6. Saw band selection for various radii.

MATERIAL	BANDSAW BLADE (TPI)	MATERIAL	BANDSAW BLADE (TPI)
SHEET METAL UNDER 1/8 INCH THICK	24-32	SOLID STOCK CONTINUED	
SHEET METAL OVER 1/8 INCH THICK	18	STEEL, ALLOY	12-14
SOLID STOCK: 1		STEEL,HIGH-SPEED	12-14
ALUMINUM	6-10	STEEL, MACHINE	10-14
BRASS	10-12	STEEL, STAINLESS	12-14
BRONZE	12-14	STEEL, TOOL	12-14
CAST IRON	10-12	TUBING UNDER 1/8-INCH WALL THICKNESS	24-32
COPPER	10-12	TUBING OVER 1/8-INCH WALL THICKNESS	18

1. Three or more teeth must contact the workpiece at all times to prevent shearing of the blade teeth. *If the recommended* pitch for solid stock fails to meet this requirement, a blade with finer pitch must be selected.

Figure 6-7. Selection of band saw blades.

FILE BANDS

The bandsawing machine is adapted for filing by use of the band file attachment. A band file is fitted over the drive and idler wheels and in place of the bandsaw blade. The band is made up of several parts or segments which are riveted at one end (the leading end) to a spring steel band. The trailing end of each segment is free to lift during the time when the band bends over the drive and idler wheels of the band saw. When the band straightens out, the segments lock together. Figure 6-8 shows the construction of and terminology for file band parts.

Note that the gate segment (a segment at one end of the band that is specially designed to allow the two band ends to be locked together) has a shoulder rivet and a dowel rivet protruding from beneath it. The shoulder rivet locks into the other file band end, and the dowel rivet aligns the two end segments and prevents the shoulder rivet from sliding out of the locked position during tiling. The gate segment of a file band is identified by yellow paint.

Cut of File Teeth

File bands are either coarse or bastard cut and normally range in pitch from 10 to 20 teeth per inch. The coarse 10-pitch bands are used for filing softer metals such as aluminum, brass, copper, and cast iron. A bastard-cut 14-pitch band is a good choice for general steel tiling, while 16 to 20 pitch bastards are recommended for filing tool steel.

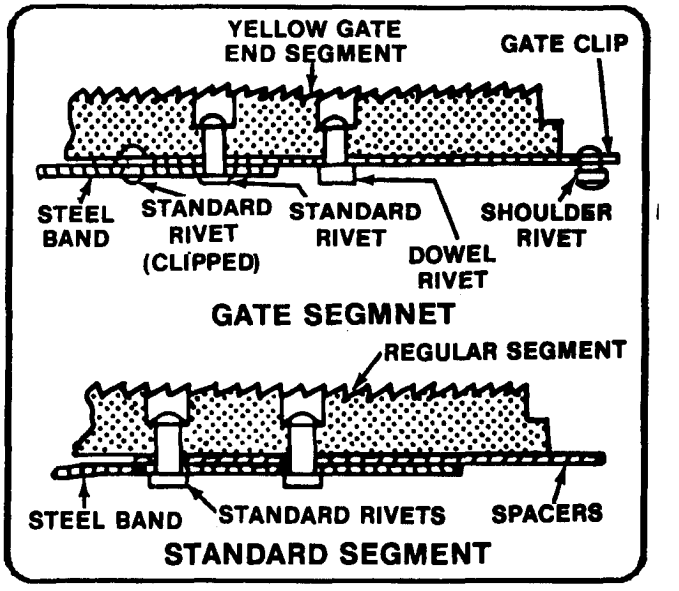

Figure 6-8. Construction and parts of a file band.

Selection of Band Files

Choose band files on the basis of workpiece thickness and type of material to be filed. In general, the thicker the workpiece, the coarser the file should be. This is due to a large; chip accumulation from the larger area of the workpiece, thus requiring additional space for the chips between the teeth. On thin sheet metal, a fine pitch file is required to prevent chatter. Use fine pitch files for filing tough carbon and alloy steels; use coarser pitch files for filing softer metals. Figure 6-9 is provided to aid in selecting the proper file for filing specific materials.

BAND FILE		
MATERIAL	CUT OF TEETH	TEETH PER INCH
ALUMINUM	SHORT ANGLE- OR BASTARD-CUT	10-12
BRASS	SHORT ANGLE- OR BASTARD-CUT	10-12
BRONZE	SHORT ANGLE- OR BASTARD-CUT	10-12
CAST IRON	SHORT ANGLE- OR BASTARD-CUT	10-12
COPPER	SHORT ANGLE- OR BASTARD-CUT	10-12
FIBER	SHORT ANGLE- OR BASTARD-CUT	10-12
MAGNESIUM	SHORT ANGLE- OR BASTARD-CUT	10-12
STEEL, ALLOY	BASTARD-CUT	14-24
STEEL, MACHINE	BASTARD-CUT	14-16
STEEL, TOOL	BASTARD-CUT	14-24

Figure 6-9. Selection of band files.

Care and Cleaning of Band Files

Clean the file often, using a stiff brush or a file card. Move the brush in the direction of each cut of the file to dislodge all particles hidden between the teeth.

The file band should not be coiled into more than three loops. The best means of storing file bands is in a cabinet looped over a 16-inch radius support with the ends hanging free.

Band File Attachment

A band file attachment (Figure 6-10) is provided with most bandsaw machines to permit the use of band files. A typical band file attachment consists of a band file guide and upper and lower guide supports that attach to the frame and part of the band saw. A special filing filler plate is provided to adapt the table slot to the extra width and depth required for the band file and file band guide.

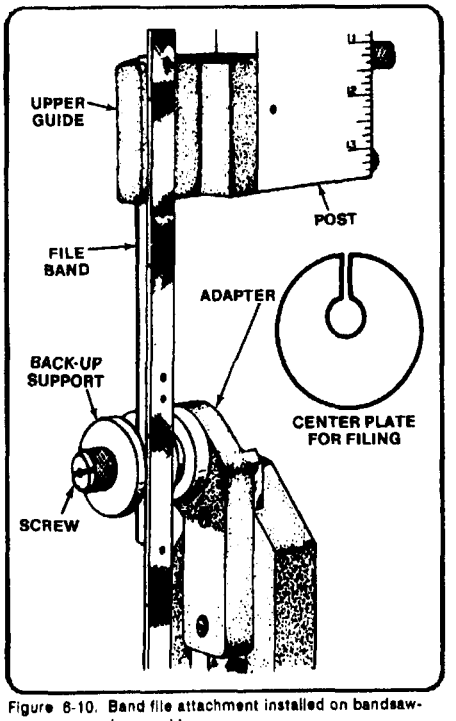

Figure 6-10. Band file attachment installed on bandsawing machine.

POLISHING BANDS

Polishing can be performed on the bandsaw using a polishing attachment and polishing band. The polishing band is usually 1 inch wide and has a heavy fabric backing.

Types of Polishing Bands

Polishing bands for bandsawing machines are usually supplied in various grain sizes of aluminum-oxide or silicone carbide abrasive: No 50 grain (coarse) for heavy stock removal and soft material, No 80 (medium) for general surface finishing, and No 120 or No 150 grain (fine) for high polishing and light stock removal.

Selection of Polishing Bands

Polishing bands should be selected according to the particular job to be performed, For removing tool marks and deburring edges, use the No 50 grain polishing band. Finer grain polishing bands should not be used on soft metals like aluminum or cast iron because the band will quickly fill with metal particles, reducing the cutting action

Polishing Attachment

The polishing attachment (Figure 6-11), similar to the band file attachment, provides support for the polishing band. The polishing band plate acts as a solid backing for the polishing band to prevent stretching and distorting the band when the workpiece is held against it. Use a polishing band filler plate to fill the table slot so the workpiece can be supported close to the polishing band.

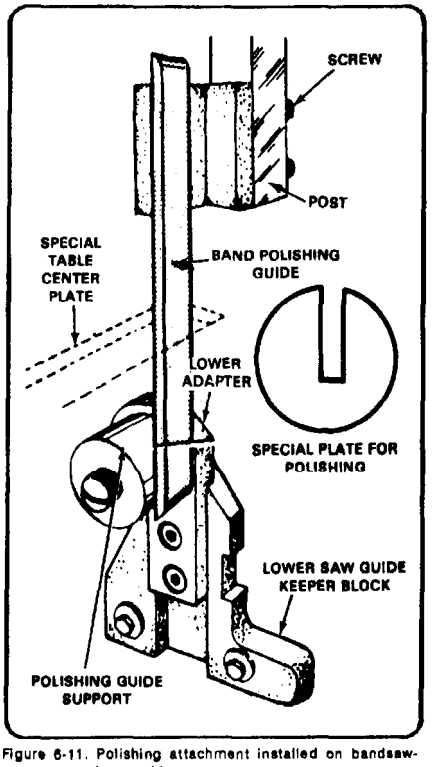

Figure 6-11. Polishing attachment installed on bandsawing machine.

DISC-CUTTING ATTACHMENT

Use the disc-cutting attachment (Figure 6-12) to saw internal or external circles and discs. The diameter of the circle that can be cut is limited to the length of the cylindrical bar on the attachment or to the throat depth of the machine. The disc-cutting attachment consists of three main parts a clamp and cylindrical bar, which is fastened to the saw guidepost; an adjustable arm, which slides on the cylindrical bar; and a pivot or centering pin. The disc must be laid out and center-drilled to a depth of 1/8 inch to 3/16 inch to provide a pivot point for the centering pin. The centerline of the centering pin must be in line with the front edge of the sawteeth and at the desired distance from the saw band.

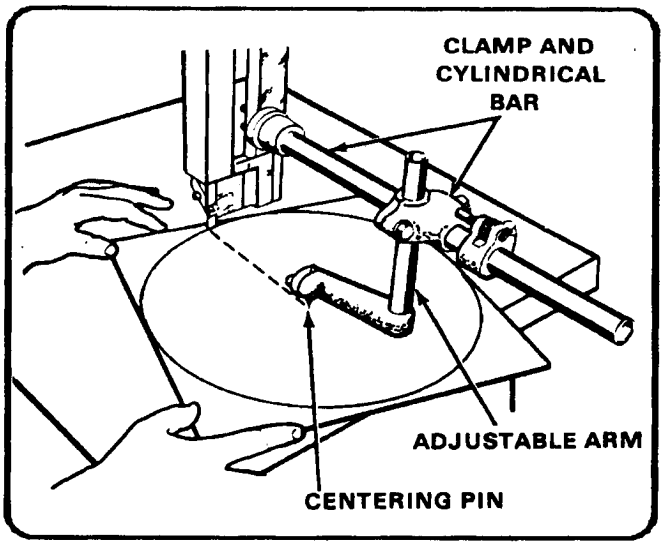

Figure 6-12. Disc-cutting attachment.

ANGULAR BLADE GUIDE ATTACHMENT

This attachment (Figure 6-13) twists the blade so that long workpieces that would not normally clear the machine column can be cut. The blade is twisted to a 30 degree angle on most machines.

MITER GUIDE ATTACHMENT

A typical miter guide attachment is illustrated in Figure 6-14. The workpiece is supported against the miter head which attaches to the slide arm. The attachment can be set at an angle with a protractor, using the table slot as a reference line. A gage rod can be extended from the attachment and used as a stop when identical lengths are sawed. When not in use, swing the attachment on the slide rod so that it hangs below the table.

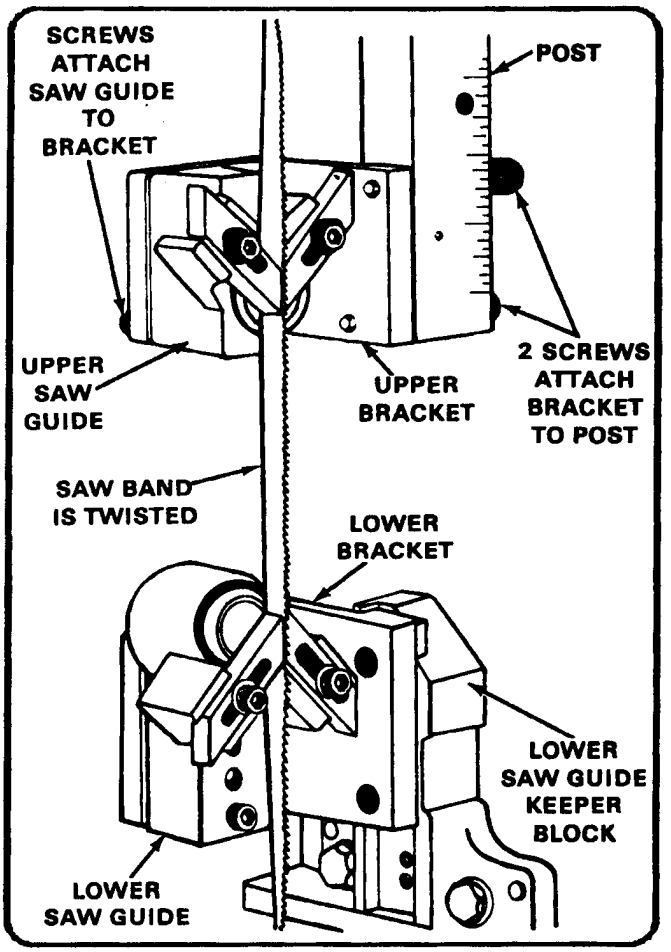

Figure 6-13. Angular saw guides.

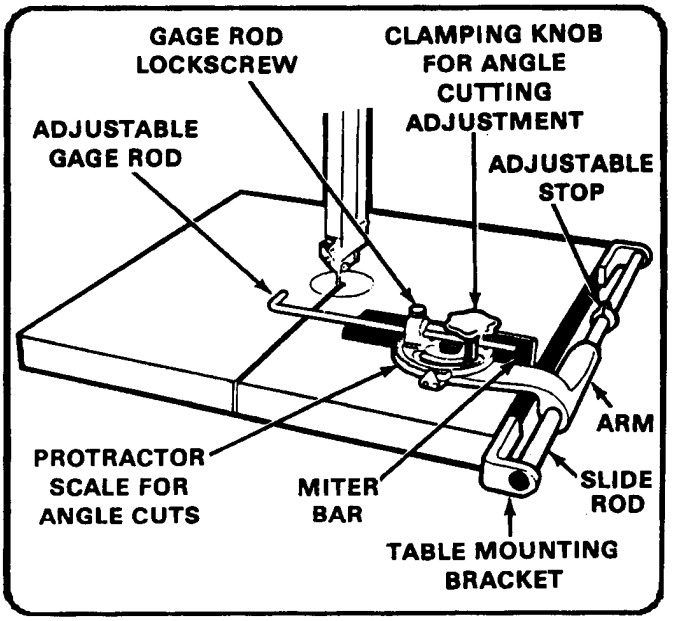

Figure 6-14. Miter guide attachment.

LAYING OUT AND MOUNTING WORK

POWER HACKSAWING

Layout

Power hacksaw machines are primarily intended for straight line cutting of stock to specific lengths. Laying out the workpiece consists of measuring the length to be cut and indicating the position for the cut by scribing a line on the stock.

Mounting

Before mounting the stock to be cut, the vise should be checked for squareness with the hacksaw blade. Place a machinist's square against the blade and the stationary vise jaw. Adjust the jaw, if necessary, at 90° to the blade. If the workpiece is to be cut at an angle other than 90°, loosen the vise and swivel it to the desired angle, measuring the angle carefully with a protractor.

Stroke

Move the blade frame and hacksaw blade by hand through one draw stroke and one return stroke. Observe whether the stroke is centered on the work and if the blade holders will clear the workpiece at the end of the stroke. Readjust the position of the vise if the stroke is not centered on the workpiece. Shorten the stroke if the blade holders hit the workpiece at the end of each stroke.

Stop gage

Use a stop gage to speed up mounting stock when several pieces of the same length are to be cut. Mount the first piece in the vise and align with the hacksaw blade to cut at the scribed line, When the workpiece is correctly positioned, move the stop gage up to the end of the workpiece and lock it in place. Cut subsequent pieces by moving the stock up to the stop gage and clamping the workpiece in the vise at this position.

Vise

The vise must be securely tightened on the workpiece to prevent loosening during cutting. Blade breakage might result from shifting workpieces not clamped tightly in the vise.

HORIZONTAL BAND SAWING MACHINES

The stock should be measured and the position of the cut machinist's square or a protractor against the bandsaw blade and the stationary vise jaw. Position the stock in the vise so that the saw blade aligns with the scribed line on the stock. If. more than one piece is to be cut to the same size, move the stock stop arm against the end of the stock and lock it in place. Additional pieces can then and moved up against the stop to produce pieces equal in length to the first piece

VERTICAL BANDSAWING MACHINES

When laying out workpieces for vertical bandsawing operations, consider the size of the stock in relation to the clearance of the bandsaw machine column. For straight-line sawing the clearance is easy to judge, but for contour sawing of large size stock, the directions of cut must be carefully figured to prevent the stock from hitting the column. If a small section is to be cut from a large sheet of metal, the section should be roughly cut oversize from the sheet and then carefully cut to the prescribed outline.

CIRCULUAR SAWING

When a circle or disk is to be sawed using the disk cutting attachment, lay out the circle on the stock as follows:

- Using a compass or pair of dividers, scribe a circle in the desired location and of the desired diameter on the stock.
- Center-punch and drill a center hole in the disk to accept the center pin of the disk cutting attachment. Make the hole only as deep and as large as required for the center pin; too large a hole will cause the center pin to fit loosely, which will result in an inaccurate cut.

CONTOUR SAWING

When an outline to be cut consists of more than two intersecting lines, the following procedure should be followed.

- Scribe the exact shape required on the stock. Take advantage of straight, clean edges on the uncut stock in laying out the piece to save unnecessary cuts.

- Determine the bandsaw blade size necessary to cut the smallest radius laid out on the workpiece
- Select a twist drill equal to or greater in diameter than the width of the bandsaw blade. Drill a hole in each comer of the pattern, making sure the holes fall within the section of material that will be removed. The comer sections are notched out after the piece is cut.
- If an internal section is to be removed from the stock and the edge must remain unbroken, layout and drill a starting hole (Figure 6-15) using a drill larger in diameter than the, width of the band saw blade. The bandsaw blade will be inserted through this hole before being welded into a band and installed on a bandsawing machine.

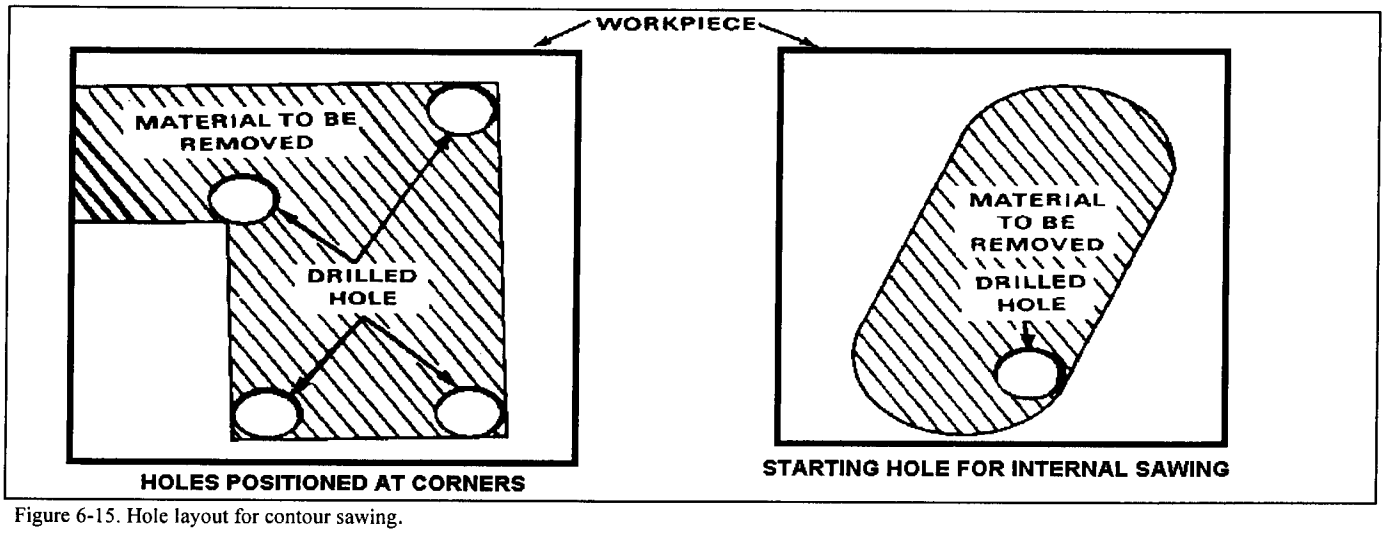

Figure 6-15. Hole layout for contour sawing.

GENERAL SAWING

Efficient sawing with sawing machines requires sharp saw blades in good condition. To prevent dulling and breakage of saw blades, proper speeds and feeds must be maintained. The speed of the saw blade for any specific operation depends upon the nature of the material being cut.

POWER HACKSAWING

Power hacksawing machines cut by drawing the hacksaw blade toward the motor end of the machine. At the completion of this movement called the draw stroke, the hacksaw blade is lifted slightly to clear the material being cut and moved an equal distance in the opposite direction.

Mounting Workpieces

Workpieces for metalcutting machines are not mounted to the machine, but are supported by the table of the machine and guided by one of the sawing machine attachments or by hand.

Power Hacksaw Speeds.

Since the cutting speed of hacksawing machines is measured in strokes per minuet, the length of the stroke is an important consideration. A longer stroke at a given speed will cut faster than a shorter stroke at the same speed. Thus. to obtain a proper cutting speed the length of the stroke must be specified.

The length of the stroke of most power hacksaws is between 4 and 10 inches depending upon the size of the machine. On machines with an adjustable stroke, the wider the stock being cut, the shorter the stroke to prevent the blade holders from hitting the stock.

With most power hacksaws, the stroke length is adjustable within 2 or 3 inches. and on some machines more than one speed can be selected. On single-speed hacksawing machines, the speed must be regulated by changing the stroke.

If the stroke is doubled the machine will cut twice as fast, and if the stroke is decreased by one-half, the machine will cut half as fast. This proportion can be applied to any fraction to increase or decrease the cutting speed of the machine.

The speeds given in the chart, Figure 6-16, bellow are for example only. The correct speeds for cutting various metals will depend on the type of machine you are using. In general the faster speeds are used for cutting soft materials and the slower speeds are used for cutting harder materials. If a recommended speed cannot be approximated either by changing the stroke or changing the speed, the feed can be decreased to prevent undue wear to the hacksaw blade.

Power hacksaw machines having a mechanical feed can usually be regulated to feed the saw downward from 0.001 to 0.025 inch per stroke, depending upon the type and size of the material to be cut. On these machines, a device to stop the feed when hard spots are encountered is usually incorporated into the design.

The feed of machines having gravity feed is regulated by the weight of the saw frame and any additional weights or springs that might be connected or attached to the frame to increase or decrease the downward force of the hacksaw blade. Maximum and minimum blade pressures obtainable are determined by the manufacturer of the hacksawing machine, and are specified as relatively light or heavy.

The following general rules apply for selecting proper feeds for hacksawing machines:

- The feed should be very light when starting a cut and can be increased after the cut is well started.
- Hard materials require a lighter feed than soft materials; reduce the feed when welds or hard spots in materials are encountered.
- Wide material requires a heavier feed than narrow material because the pressure is distributed over a larger surface.
- Sharp hacksaw blades will cut well with lighter feeds. Heavier feeds are necessary for cutting with dull blades.

MATERIAL	SPEED IN STROKES PER MINUTE	
	4 TO 6 INCH	8 TO 10 INCH
ALUMINUM	135	65
BRASS	135	65
BRONZE	90	45
CAST IRON	90	45
COPPER	135	65
STEEL, ALLOY	90	45
STEEL, HIGH-SPEED	60	30
STEEL, MACHINE	135	65
STEEL, STAINLESS	60	30
STEEL, TOOL (ANNEALED)	90	45
STEEL, TOOL (UNANNEALED)	60	30

Figure 6-16. Power hacksawing machine speeds.

BANDSAWING

The cutting speed of the bandsaw machine is the speed of the bands blade as it passes the table measured in feet per minute. The feed of the horizontal band saw machines downward pressure applied to the material being cut by the bands blade. The feed of vertical bandsawing machines is the pressure applied to the bands blade by the material being cut.

Bandsawing Speeds

Proper bandsaw speeds are important in conserving bands blades. Too great a speed for the material being cut will cause abnormally rapid blade wear, while too slow a speed will result in inefficient production. The chart of recommended speeds (Figure 6-17) are guidelines only. It shows the speeds for a given type of machine. The cutting speed always depends on the type of machine you are using and the manufactures' recommendations.

All bandsawing machines have several cutting speeds. Since the diameter of the drive wheel of the bandsaw machine establishes a fixed ratio between the motor or transmission speed in RPM to the blade speed in FPM, it is not necessary to convert RPM into FPM as with most other machine tools. The speeds are identified in FPM on the sawing machine speed selector controls. Some machines have a speed indicator so a careful check of sawing speeds may be made when the machine is operating with or without a load.

In general the following principles apply to speeds of bandsaw blades:

- The harder the material, the slower the speed; conversely, the softer the material, the faster the speed.
- The faster the speed, the finer the finish produced on the cut surface. This principle applies to light feeds in conjunction with fast feeds.

Horizontal Bandsawing Machine Feeds

Feed of horizontal bandsaw machines is controlled by adjusting the pressure applied by the saw blade against the material being cut, as with hacksawing machines.

The horizontal saw has a spring counterbalance and a sliding weight to adjust the pressure of the blade. When the sliding weight is moved toward the pivot point of the saw frame the band saw blade pressure is reduced. When the weight is moved away from the pivot point, the pressure is increased.

The following general principles apply when regulating the feed of horizontal band saw machines.

- The feed should be very light when starting a cut. After the cut is started, increase the feed.
- Wider material requires a heavier feed than narrow material.
- Wide blades will stand greater pressure than narrow blades and can therefore be used with heavier feeds.
- A lighter feed is required for hard materials; a heavier feed can be used for soft materials.
- Reduce the feed when hard spots in the material are encountered such as chilled spots in cast iron and welds in joined sections.

MATERIAL	BANDSAWING SPEED (fpm)	MATERIAL	BANDSAWING SPEED (fpm)
ALUMINUM	200 TO 2,000	RUBBER, HARD	150 TO 250
BAKELITE	200 TO 900	STEEL, ALLOY	50 TO 100
BRASS, SOFT	175 TO 300	STEEL, HIGH CARBON	50 TO 100
BRASS, HARD	75 TO 150	STEEL, HIGH-SPEED	50 TO 90
BRASS, SHEETS	200 TO 900	STEEL, MACHINE	75 TO 175
BRONZE	75 TO 150	STEEL, SHEEET	150 TO 200
CAST IRON	50 TO 100	STEEL, STAINLESS	50 TO 75
COPPER	115 TO 175	STEEL, TOOL	50 TO 150
MONEL METAL	50 TO 100		

Figure 6-17. Band sawing speeds.

Vertical Machine Feeds

With vertical machines, the feed is the pressure applied to the saw blade by the material being cut. The workpiece may be hand fed or power fed depending upon the operation to be performed. Cutting curves or special contours requires that the workpiece be guided and fed into the saw blade by hand.

The power feed on bandsaw machines is operated by adjustable weights in the machine pedestal. The weights are connected by cables to one of the work-holding attachments of the sawing machine to pull the workpiece against the bandsaw blade. To operate the power feed, the weights are raised by depressing a pedal and the cables are then fixed to the work-holding attachment. When the pedal is released the weights pull the piece into the blade.

The following general rules apply to feeding workpieces on bandsawing machines:

- The feed should be light when starting a cut. The pressure can be increased after the cut is established.
- Hard materials require lighter feeds than softer materials.
- Wider band saw blades will stand greater pressure than narrow blades and can therefore be used with heavier feeds.
- When hard spots in the material being cut are encountered, reduce the feed until the spots are cut through.
- Use a light feed when cutting curves; a heavier feed for straight-line cutting.

COOLANTS

Most sawing machines used in military operations are dry cutting machines; that is, they are not intended for use with liquid coolants. However, some power hacksaws and horizontal bandsaws are equipped with a coolant attachment. Soluble oil products, when mixed with water to form emulsions, are used for these machines. This type of coolant has proven very satisfactory for sawing where cooling is an important factor. Most manufacturers of water oil emulsion coolants add a rust inhibitor to the solution to prevent rusting caused by the water in the coolant.

STRAIGHT-LINE SAWING

Straight-line sawing is the most common machine sawing operation. It may be performed using the power hacksaw, horizontal, or vertical band saw.

Power Hacksawing

The power hacksaw machine is designed primarily for straight-line sawing. A typical sawing operation is outlined below:

- Select a hacksaw blade of the proper length for the machine and proper pitch for the material to be cut. Install the hacksaw blade with the teeth pointing downward and toward the motor end of the hacksawing machine.
- Check the alignment of the vise and hacksaw blade and mount the workpiece in the vise. Make sure the vise holds the workpiece securely.
- Check the stroke of the hacksawing machine and adjust if necessary. After adjusting the stroke, move the hacksaw blade and sawing machine frame through one cycle (draw stroke and return stroke) by hand to check the blade clearance at each end of the workpiece. Readjust the position of the vise if necessary.
- Position the hacksaw blade about 1/4 inch above the workpiece and set the feed control to its lightest feed setting.
- Set the desired speed of the hacksawing machine.
- Start the machine and let the blade feed lightly into the workpiece for about 1/4 inch. Readjust the feed to whatever the material will stand for normal cutting.
- Permit the hacksaw blade to cut completely through the workpiece. The blade frame will trip a switch on the sawing machine bed to stop the sawing machine.

Horizontal Bandsawing

Like hacksawing machines, the horizontal bandsaw machine is used primarily for straight-line sawing. The typical sequence of operation for this machine is outlined on next page.

- Select and install a bandsaw blade of the proper pitch for the type and size of material to be cut.
- Set the vise to the desired angle and check the angle by measuring it from the line of the band saw blade.
- Mount the workpiece in the vise. Make sure the work piece is secured and will not loosen during cutting.
- Check the alignment of the blade guides for vertical positioning and adjust if necessary.
- Position the saw frame so that the bandsaw blade is 1/4 inch above the workpiece. The power feed weight should be placed at its lightest feed setting.
- Set the desired speed on the horizontal band sawing machine.
- Start the machine and let the bandsaw blade cut into the workpiece about 1/4 inch. After the cut has been established, readjust the feed weight to exert the desired amount of pressure on the workpiece.
- The machine will stop itself when it cuts completely through the workpiece.

Vertical Band Saw Operation

Straight-line sawing is performed on the vertical band saw machine by using one or a combination of several mechanisms or attachments: the miter guide attachment, with or without power feed, with or without the work-holding jaw device-. and the work-holding jaw device with power feed and angular blade guide attachment.

- The miter guide attachment on some machines can be connected to the power feed mechanism and on others must be fed by hand. The workpiece is clamped or hand-held against the miter guide attachment and the workpiece and attachment are moved on a track parallel to the blade, thereby assuring a straight-line cut.
- The work-holding jaw device on some machines can be connected to the power feed to produce straight-line cuts (Figure 6-18).
- The angular blade guide attachment is used for straight-line sawing when the workpiece cannot be cut in the usual manner because it is too large or too long to clear the column of the bar, sawing machine frame.

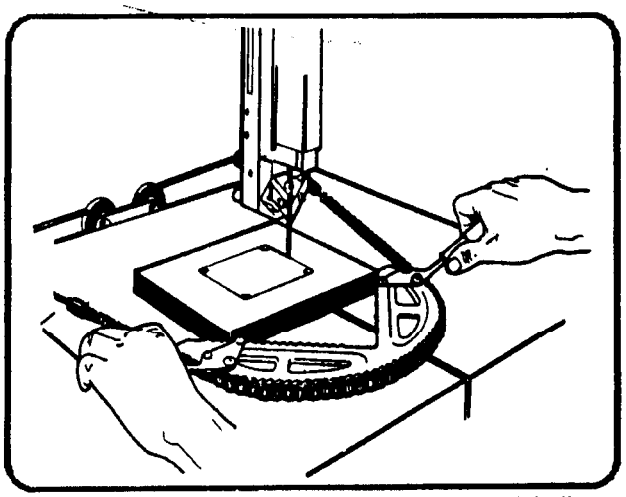

Figure 6-18. Work holding jaw device used for straight-line sawing with power feed.

A typical example of straight-line sawing is outlined below :

- Select a band saw blade of the desired pitch for the nature of material to be cut. The blade should be as wide as possible for straight-line sawing.
- Set the desired speed on the bandsawing machine.
- Position the workpiece at the desired angle in one of the machine attachments and connect the cable to the power feed mechanism if power feed is to be used.
- Start the bandsawing machine and feed the workpiece lightly into the blade to start the cut. Once the cut is started, the feed can be increased. If feeding is by hand, the pressure applied to the workpiece by the operator can be varied to find the best cutting conditions.

RADIUS SAWING

Radius sawing is performed on the bandsaw by either guiding the workpiece by hand or by using the disk-cutting attachment.

Blade Selection

Care must be taken to select a bandsaw blade of the proper width for the radius or circle to be cut. If the blade is too wide for the radius, the heel of the blade will press against the outer edge of the kerf (Figure 6-19). When the heel contacts this edge, any further twisting of the workpiece in an attempt to cut a sharper radius will twist the bandsaw blade and may result in the blade breaking.

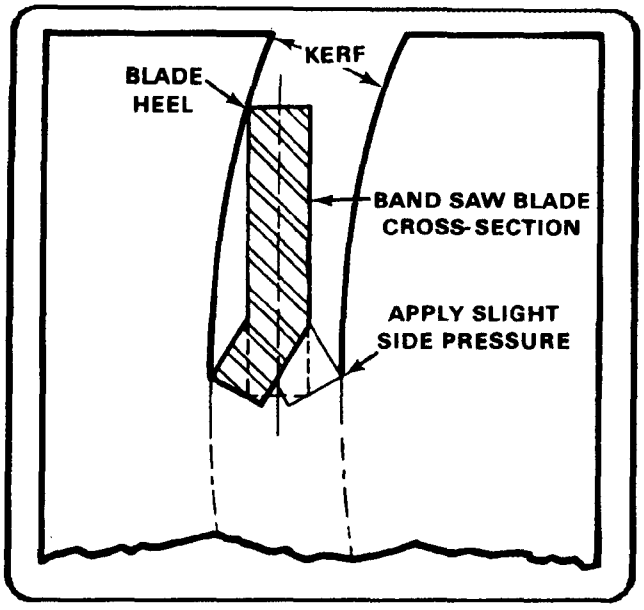

Figure 6-19. Radius limitation for bandsaw blade.

Cutting Pressure

When cutting a radius, apply a slight side pressure at the inner cutting edge of the bandsaw blade (Figure 6-19). This pressure will give the blade a tendency to provide additional clearance.

CONTOUR SAWING

Contour sawing is the process of cutting shapes in which the direction of the cut must be changed at intervals. Holes larger in diameter than the width of the saw blade must be drilled at each corner where a change of direction of the bandsaw blade will occur. Figure 6-20 illustrates the methods of changing direction of a cut at a hole.

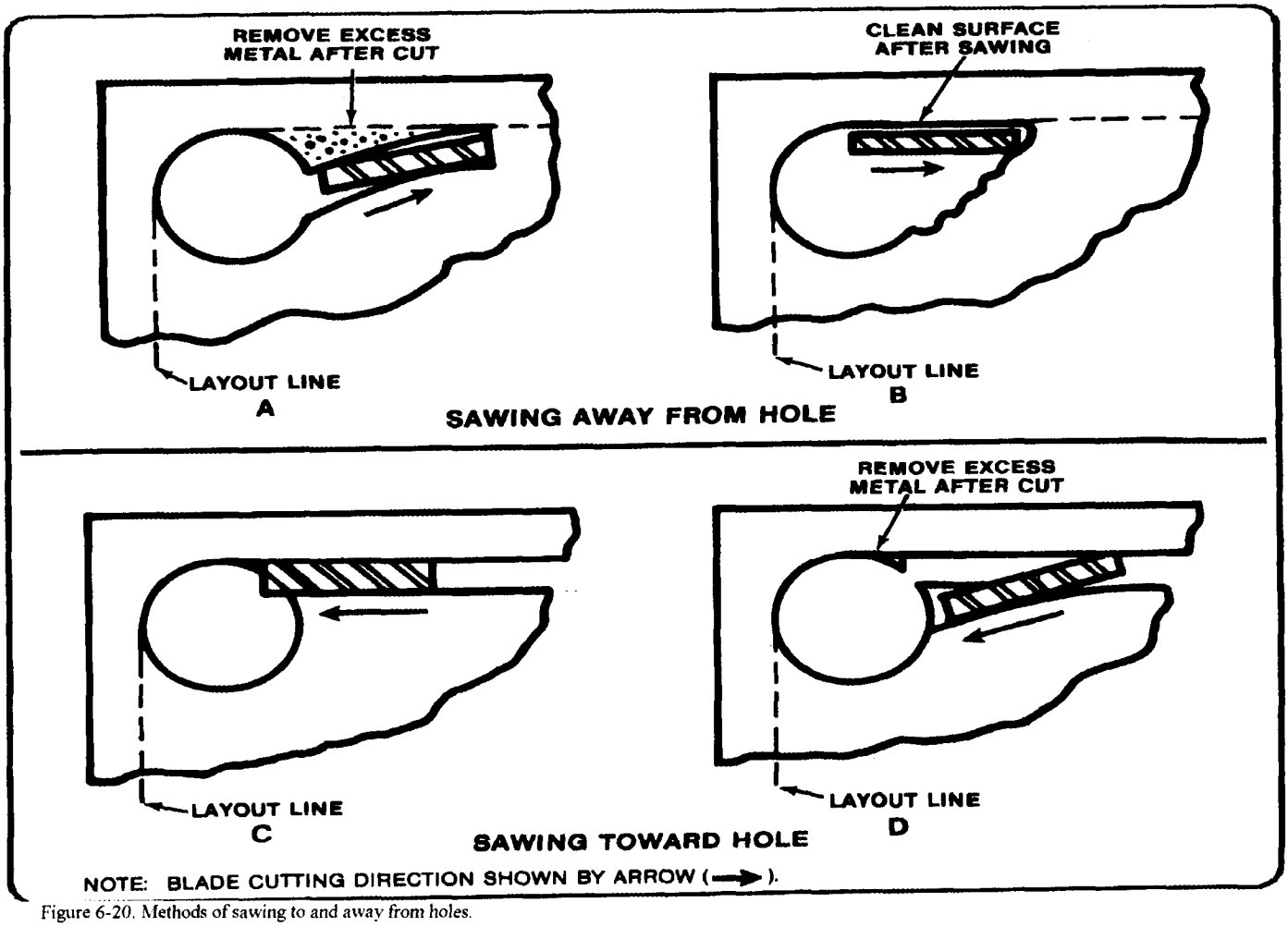

Figure 6-20. Methods of sawing to and away from holes.

Sawing Away From the Hole

To saw away from the hole on a line tangent to the hole, the saw blade must cut away from the center of the hole, or the blade will bow and cause a belly in the cut. The cut should be started as in A, Figure 6-20, in which a curve is cut outward from the hole to meet the layout line, leaving apiece of excess metal which can be removed later by filing. An alternate method is shown at B, Figure 6-20, in which a section of metal is notched out with a saw blade by several short cuts to give the blade clearance for starting the cut along the layout line.

Sawing Toward the Hole

The diagrams at C and D, Figure 6-20, show the proper method of sawing up to a hole in two cuts. The excess metal can be removed later by tiling. After the shape is cut and the slug or waste material is removed, the comers should be finished by filing or notching. The bandsaw blade should not be used for these operations because the blade will bow and cut unevenly.

SPECIAL OPERATIONS ON SAWING MACHINES

INTERNAL SAWING

Internal sawing is performed in the same manner as contour sawing except that the bandsaw blade cannot start cutting from the edge of the workpiece but must start cutting from a drilled hole in the workpiece (Figure 6-20). With the pattern laid out on the workpiece and the starting hole drilled, insert an unwelded bandsaw blade of the proper length through the starting hole. Bring the two ends of the blade together at the butt welder of the bandsawing machine and weld the blade into a continuous band as described in the pertinent operation manual for the machine. Install the bandsaw blade on the sawing machine and make the necessary adjustments to the machine. With the cut starting from the hole as shown in A or B, Figure 6-20. When the sawing is completed, cut the bandsaw blade so that it can be removed from the workpiece.

BAND FILING

Filing is performed on the vertical band saw machine using a band tile and the band file attachment. As with sawing, the quality of filing and the economical wear of the band file depend upon proper selection of files and filing speeds for different materials and conditions.

Band Filing Speed

Band files should be run at relatively slow speeds as compared to speeds used for band sawing. Figure 6-21 lists recommended speeds for band filing. Note that, in general, the slower speeds are used for filing harder metals and faster speeds are used for filing softer metals.

Band Filing Feeds

Work pressure on the band file should not be excessive. A medium amount of pressure applied against the band file moving at the proper speed will produce curled chips which will not clog the file. Heavy pressure will cause clogging and can cause the file to break or the machine to stall. A light pressures should be used for finish filing, with a slow, sideways motion that will not leave vertical file marks on the workpiece.

MATERIAL	BAND FILING SPEED (fpm)	MATERIAL	BAND FILING SPEED (fpm)
ALUMINUM	75 TO 175	FIBER	115 TO 175
BRASS	115 TO 260	MAGNESIUM	75 TO 175
BRONZE	75 TO 115	STEEL, ALLOY	50 TO 115
CAST IRON	50 TO 115	STEEL, MACHINE	75 TO 175
COPPER	115 TO 260	STEEL, TOOL	50 TO 75

Figure 6-21. Band filing speeds.

POLISHING

Polishing bands and a polishing attachment are provided with the vertical band saw machine so that light polishing can be performed. The polishing bands are intended primarily for removing saw marks on the cut edges of workpieces.

Polishing Speeds

Move polishing bands at speeds between 75 and 260 FPM, the faster speeds being used for softer materials and the slower speeds being used for harder materials.

Polishing Feeds

Feeds should be light for polishing. Use a slow, sideways motion so that the polishing band will leave no marks on the workpiece. If the band does not remove the tool marks quickly, change to a coarser polishing band.

Chapter 7

LATHES

The lathe is a machine tool used principally for shaping articles of metal (and sometimes wood or other materials) by causing the workpiece to be held and rotated by the lathe while a tool bit is advanced into the work causing the cutting action. The basic lathe that was designed to cut cylindrical metal stock has been developed further to produce screw threads. tapered work. drilled holes. knurled surfaces, and crankshafts. The typical lathe provides a variety of rotating speeds and a means to manually and automatically move the cutting tool into the workpiece. Machinists and maintenance shop personnel must be thoroughly familiar with the lathe and its operations to accomplish the repair and fabrication of needed parts.

TYPES OF LATHES

Lathes can be divided into three types for easy identification: engine lathes, turret lathes, and special purpose lathes. Small lathes can be bench mounted, are lightweight, and can be transported in wheeled vehicles easily. The larger lathes are floor mounted and may require special transportation if they must be moved. Field and maintenance shops generally use a lathe that can be adapted to many operations and that is not too large to be moved from one work site to another. The engine lathe (Figure 7-1) is ideally suited for this purpose. A trained operator can accomplish more machining jobs with the engine lathe than with any other machine tool. Turret lathes and special purpose lathes are usually used in production or job shops for mass production or specialized parts. while basic engine lathes are usually used for any type of lathe work. Further reference to lathes in this chapter will be about the various engine lathes.

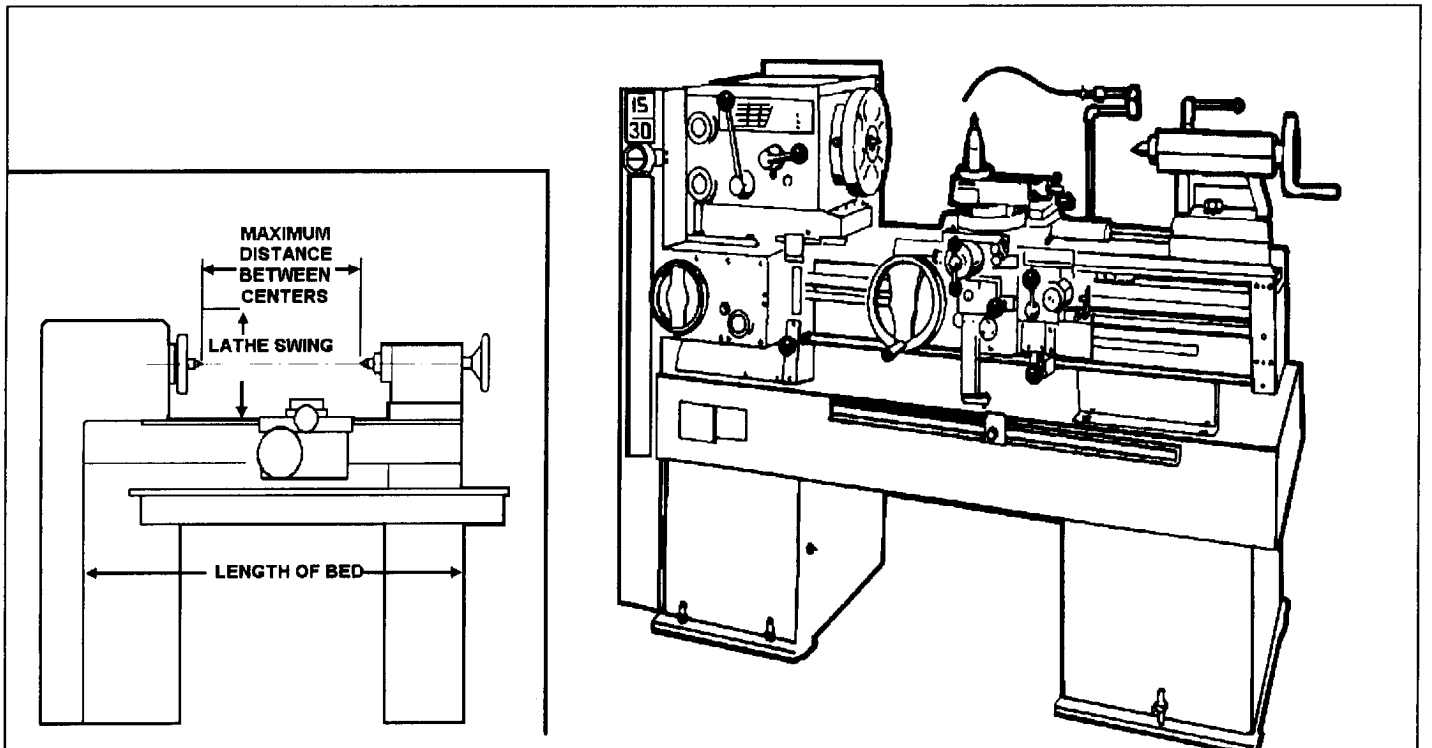

Figure7-1. Engine lathe.

ENGINE LATHES

Sizes

The size of an engine lathe is determined by the largest piece of stock that can be machined. Before machining a workpiece, the following measurements must be considered: the diameter of the work that will swing over the bed and the length between lathe centers (Figure 7-1).

Categories

Slight differences in the various engine lathes make it easy to group them into three categories: lightweight bench engine lathes, precision tool room lathes, and gap lathes, which are also known as extension- type lathes. These lathe categories are shown in Figure 7-2 Different manufacturers may use different lathe categories.

Lightweight

Lightweight bench engine lathes are generally small lathes with a swing of 10 inches or less, mounted to a bench or table top. These lathes can accomplish most machining jobs, but may be limited due to the size of the material that can be turned.

Precision

Precision tool room lathes are also known as standard manufacturing lathes and are used for all lathe operations, such as turning, boring, drilling, reaming, producing screw threads, taper turning, knurling, and radius forming, and can be adapted for special milling operations with the appropriate fixture. This type of lathe can handle workplaces up to 25 inches in diameter and up to 200 inches long. However, the general size is about a 15-inch swing with 36 to 48 inches between centers. Many tool room lathes are used for special tool and die production due to the high accuracy of the machine.

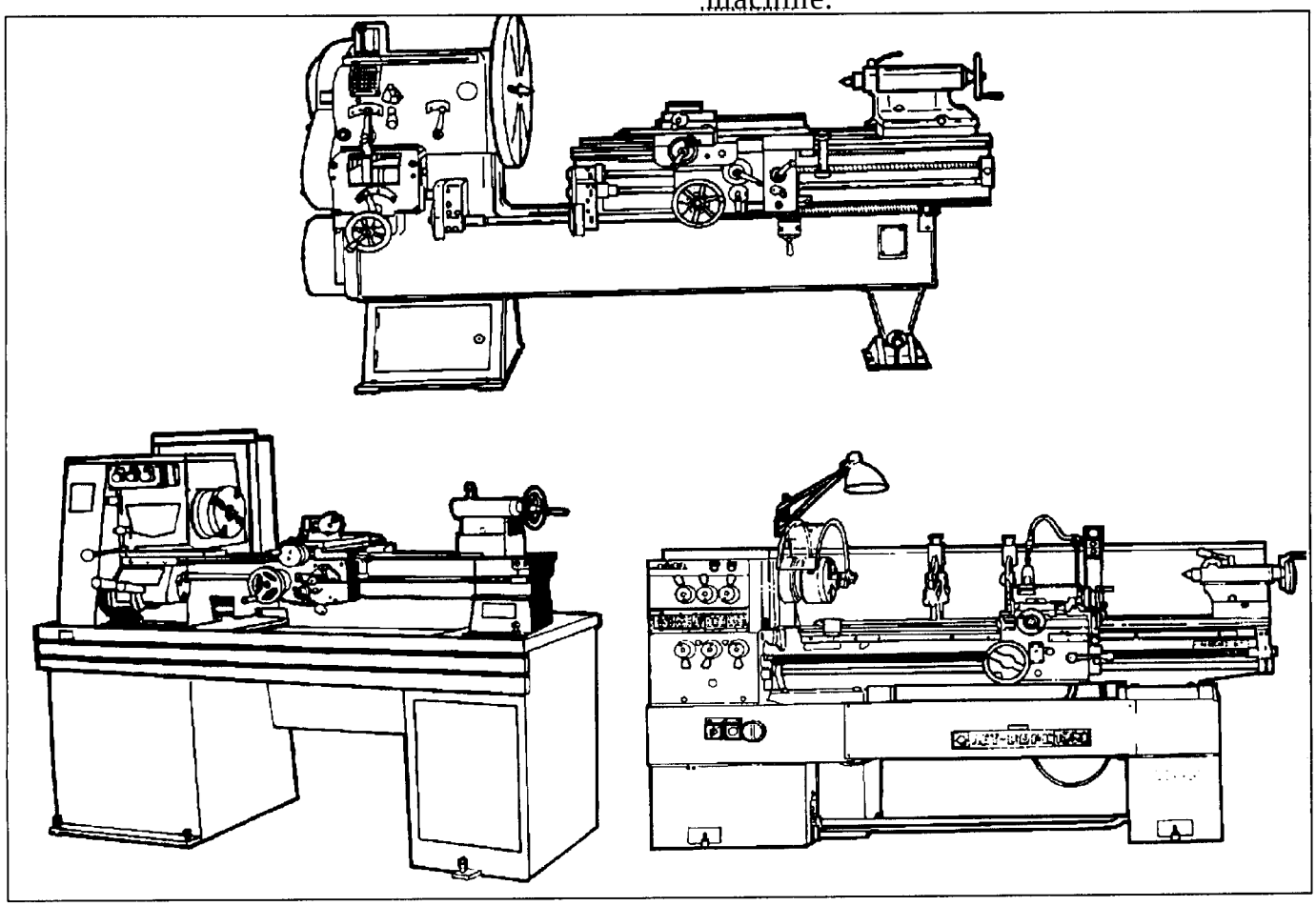

Figure 7-2. Lathe categories.

GAP OR EXTENSION-TYPE LATHES

Gap or extension-type lathes are similar to toolroom lathes except that gap lathes can be adjusted to machine larger diameter and longer workplaces The operator can increase the swing by moving the bed a distance from the headstock, which is usually one or two feet. By sliding the bed away from the headstock, the gap lathe can be used to turn very long workplaces between centers.

LATHE COMPONENTS

Engine lathes all have the same general functional parts, even though the specific location or shape of a certain part may differ from one manufacturer The bed is the foundation of the working parts of the lathe to another (Figure 7-3).

The main feature of its construction are the ways which are formed on its upper surface and run the full length of the bed. Ways provide the means for holding the tailstock and carriage, which slide along the ways, in alignment with the permanently attached headstock

The headstock is located on the operator's left end of the lathe bed. It contains the main spindle and oil reservoir and the gearing mechanism for obtaining various spindle speeds and for transmitting power to the feeding and threading mechanism. The headstock mechanism is driven by an electric motor connected either to a belt or pulley system or to a geared system. The main spindle is mounted on bearings in the headstock and is hardened and specially ground to fit different lathe holding devices. The spindle has a hole through its entire length to accommodate long workplaces. The hole in the nose of the spindle usually has a standard Morse taper which varies with the size of the lathe. Centers, collets, drill chucks, tapered shank drills and reamers may be inserted into the spindle. Chucks, drive plates, and faceplates may be screwed onto the spindle or clamped onto the spindle nose.

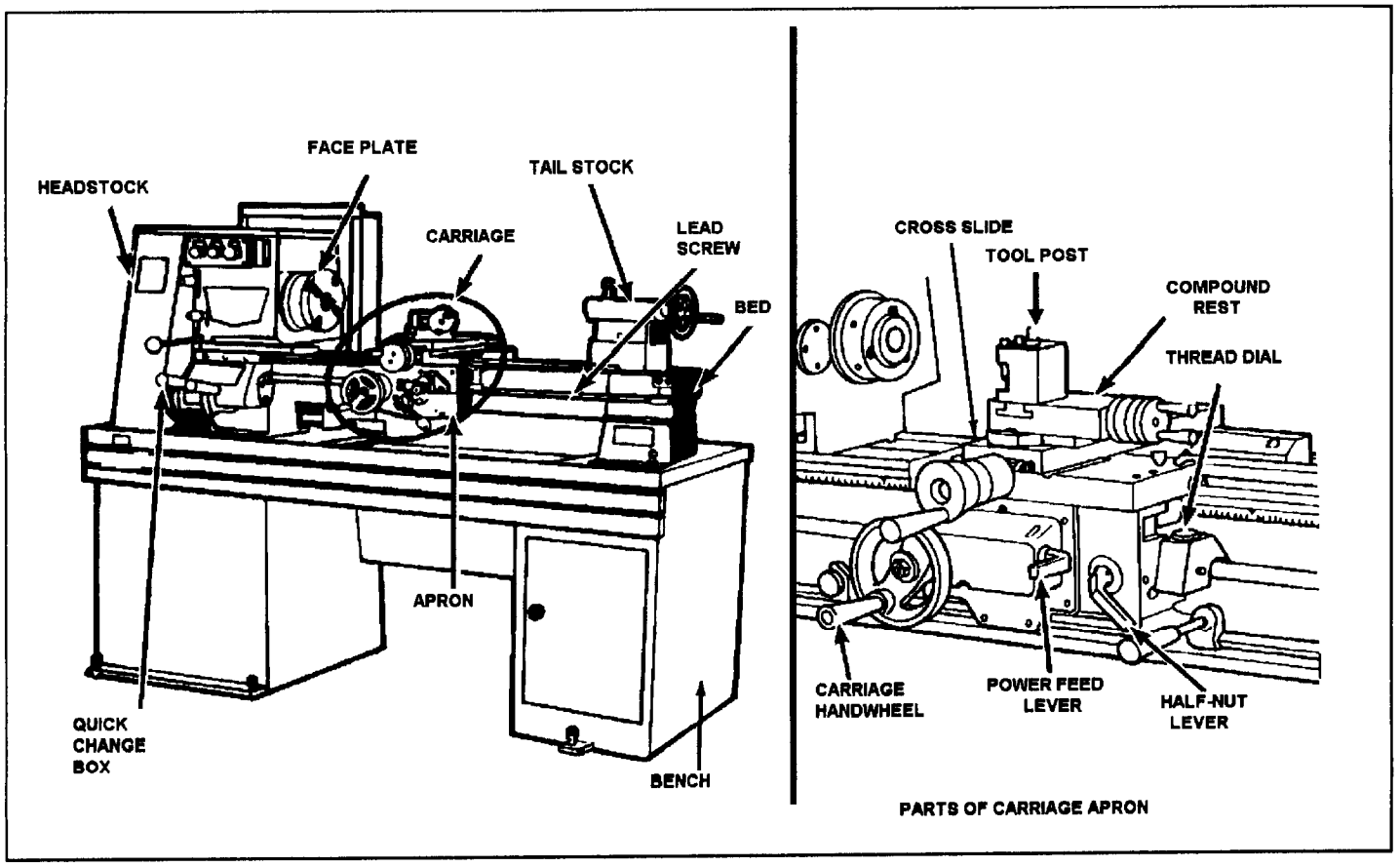

Figure 7-3. Lathe components.

The tailstock is located on the opposite end of the lathe from the headstock. It supports one end of the work when machining between centers, supports long pieces held in the chuck, and holds various forms of cutting tools, such as drills, reamers, and taps. The tailstock is mounted on the ways and is designed to be clamped at any point along the ways. It has a sliding spindle that is operated by a hand wheel and clamped in position by means of a spindle clamp. The tailstock may be adjusted laterally (toward or away from the operator) by adjusting screws. It should be unclamped from the ways before any lateral adjustments are made, as this will allow the tailstock to be moved freely and prevent damage to the lateral adjustment screws.

The carriage includes the apron, saddle, compound rest, cross slide, tool post, and the cutting tool. It sits across the lathe ways and in front of the lathe bed. The function of the carriage is to carry and move the cutting tool. It can be moved by hand or by power and can be clamped into position with a locking nut. The saddle carries the cross slide and the compound rest. The cross slide is mounted on the dovetail ways on the top of the saddle and is moved back and forth at 90° to the axis of the lathe by the cross slide lead screw. The lead screw can be hand or power activated. A feed reversing lever, located on the carriage or headstock, can be used to cause the carriage and the cross slide to reverse the direction of travel. The compound rest is mounted on the cross slide and can be swiveled and clamped at any angle in a horizontal plane. The compound rest is used extensively in cutting steep tapers and angles for lathe centers. The cutting tool and tool holder are secured in the tool post which is mounted directly to the compound rest. The apron contains the gears and feed clutches which transmit motion from the feed rod or lead screw to the carriage and cross slide.

CARE AND MAINTENANCE OF LATHES

Lathes are highly accurate machine tools designed to operate around the clock if properly operated and maintained. Lathes must be lubricated and checked for adjustment before operation. Improper lubrication or loose nuts and bolts can cause excessive wear and dangerous operating conditions.

The lathe ways are precision ground surfaces and must not be used as tables for other tools and should be kept clean of grit and dirt. The lead screw and gears should be checked frequently for any metal chips that could be lodged in the gearing mechanisms. Check each lathe prior to operation for any missing parts or broken shear pins. Refer to the operator's instructions before attempting to lift any lathe. Newly installed lathes or lathes that are transported in mobile vehicles should be properly leveled before any operation to prevent vibration and wobble. Any lathes that are transported out of a normal shop environment should be protected from dust, excessive heat, and very cold conditions. Change the lubricant frequently if working in dusty conditions. In hot working areas, use care to avoid overheating the motor or damaging any seals. Operate the lathe at slower speeds than normal when working in cold environments.

SAFETY

All lathe operators must be constantly aware of the safety hazards that are associated with using the lathe and must know all safety precautions to avoid accidents and injuries. Carelessness and ignorance are two great menaces to personal safety. Other hazards can be mechanically related to working with the lathe, such as proper machine maintenance and setup. Some important safety precautions to follow when using lathes are:

- Correct dress is important, remove rings and watches, roll sleeves above elbows.
- Always stop the lathe before making adjustments.
- Do not change spindle speeds until the lathe comes to a complete stop.
- Handle sharp cutters, centers, and drills with care.
- Remove chuck keys and wrenches before operating
- Always wear protective eye protection.
- Handle heavy chucks with care and protect the lathe ways with a block of wood when installing a chuck.
- Know where the emergency stop is before operating the lathe.
- Use pliers or a brush to remove chips and swarf, never your hands.
- Never lean on the lathe.
- Never lay tools directly on the lathe ways. If a separate table is not available, use a wide board with a cleat on each side to lay on the ways.
- Keep tools overhang as short as possible.

- Never attempt to measure work while it is turning.
- Never file lathe work unless the file has a handle.
- File left-handed if possible.
- Protect the lathe ways when grinding or filing.
- Use two hands when sanding the workpiece. Do not wrap sand paper or emery cloth around the workpiece.

TOOLS AND EQUIPMENT

GENERAL PURPOSE CUTTING TOOLS

The lathe cutting tool or tool bit must be made of the correct material and ground to the correct angles to machine a workpiece efficiently. The most common tool bit is the general all-purpose bit made of high-speed steel. These tool bits are generally inexpensive, easy to grind on a bench or pedestal grinder, take lots of abuse and wear, and are strong enough for all-around repair and fabrication. High-speed steel tool bits can handle the high heat that is generated during cutting and are not changed after cooling. These tool bits are used for turning, facing, boring and other lathe operations. Tool bits made from special materials such as carbides, ceramics, diamonds, cast alloys are able to machine workplaces at very high speeds but are brittle and expensive for normal lathe work. High-speed steel tool bits are available in many shapes and sizes to accommodate any lathe operation.

SINGLE POINT TOOL BITS

Single point tool bits can be one end of a high-speed steel tool bit or one edge of a carbide or ceramic cutting tool or insert. Basically, a single point cutter bit is a tool that has only one cutting action proceeding at a time. A machinist or machine operator should know the various terms applied to the single point tool bit to properly identify and grind different tool bits (Figure 7-4).

- The shank is the main body of the tool bit.
- The nose is the part of the tool bit which is shaped to a point and forms the corner between the side cutting edge and the end cutting edge. The nose radius is the rounded end of the tool bit.

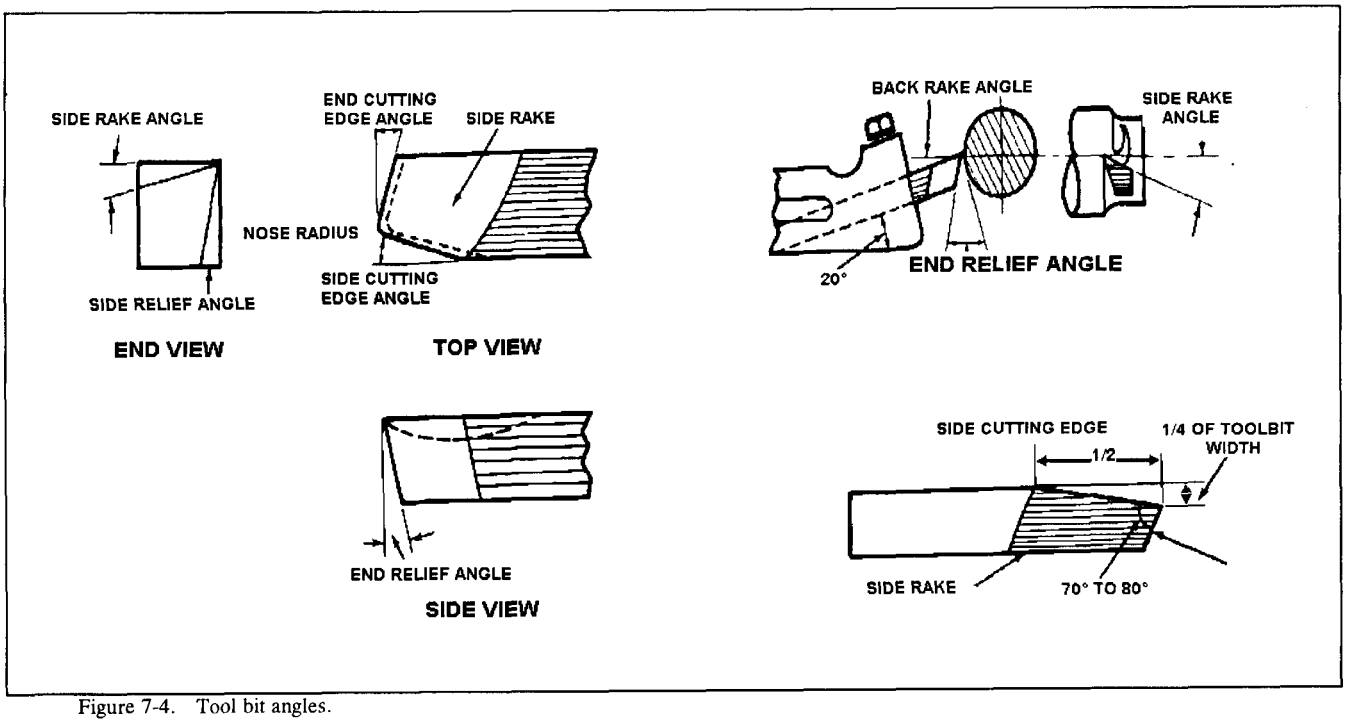

Figure 7-4. Tool bit angles.

- The face is the top surface of the tool bit upon which the chips slide as they separate from the work piece.
- The side or flank of the tool bit is the surface just below and adjacent to the cutting edge.
- The cutting edge is the part of the tool bit that actually cuts into the workpiece, located behind the nose and adjacent to the side and face.
- The base is the bottom surface of the tool bit, which usually is ground flat during tool bit manufacturing.
- The end of the tool bit is the near-vertical surface which, with the side of the bit, forms the profile of the bit. The end is the trailing surface of the tool bit when cutting.
- The heel is the portion of the tool bit base immediately below and supporting the face.

Angles of Tool Bits

The successful operation of the lathe and the quality of work that may be achieved depend largely on the angles that form the cutting edge of the tool bit (Figure 7-4). Most tools are hand ground to the desired shape on a bench or pedestal grinder. The cutting tool geometry for the rake and relief angles must be properly ground, but the overall shape of the tool bit is determined by the preference of the machinist or machine operator. Lathe tool bit shapes can be pointed, rounded, squared off, or irregular in shape and still cut quite well as long as the tool bit angles are properly ground for the type of material being machined. The angles are the side and back rake angles, the side and end cutting edge angles, and the side and end relief angles. Other angles to be considered are the radius on the end of the tool bit and the angle of the tool holder. After knowing how the angles affect the cutting action, some recommended cutting tool shapes can be considered.

Rake angle pertains to the top surface of the tool bit. There are two types of rake angles, the side and back rake angles (Figure 7-4). The rake angle can be positive, negative, or have no rake angle at all. The tool holder can have an angle, known as the tool holder angle, which averages about 15°, depending on the model of tool holder selected. The tool holder angle combines with the back rake angle to provide clearance for the heel of the tool bit from the workpiece and to facilitate chip removal. The side rake angle is measured back from the cutting edge and can be a positive rake angle or have no rake at all.

Rake angles cannot be too great or the cutting edge will lose strength to support the cutting action. The side rake angle determines the type and size of chip produced during the cutting action and the direction that the chip travels when leaving the cutting tool. Chip breakers can be included in the side rake angle to ensure that the chips break up and do not become a safety hazard.

Side and relief angles, or clearance angles, are the angles formed behind and beneath the cutting edge that provide clearance or relief to the cutting action of the tool. There are two types of relief angles, side relief and end relief. Side relief is the angle ground into the tool bit, under the side of the cutting edge, to provide clearance in the direction of tool bit travel. End relief is the angle ground into the tool bit to provide front clearance to keep the tool bit heel from rubbing. The end relief angle is supplemented by the tool holder angle and makes up the effective relief angle for the end of the tool bit.

Side and cutting edge angles are the angles formed by the cutting edge with the end of the tool bit (the end cutting edge angle), or with the side of the tool bit (the side cutting edge angle). The end cutting edge angle permits the nose of the tool bit to make contact with the work and aids in feeding the tool bit into the work. The side cutting edge angle reduces the pressure on the tool bit as it begins to cut. The side rake angle and the side relief angle combine to form the wedge angle (or lip angle) of the tool bit that provides for the cutting action (Figure 7-4).

A radius ground onto the nose of the tool bit can help strengthen the tool bit and provide for a smooth cutting action.

Shapes of Tool Bits

The overall shape of the lathe tool bits can be rounded, squared, or another shape as long as the proper angles are included. Tool bits are identified by the function they perform, such as turning or facing. They can also be identified as roughing tools or finishing tools. Generally, a roughing tool has a radius ground onto the nose of the tool bit that is smaller than the radius for a finishing or general-purpose tool bit. Experienced machinists have found the following shapes to be useful for different lathe operations.

A right-hand turning tool bit is shaped to be fed from right to left. The cutting edge is on the left side of the tool bit and the face slopes down away from the cutting edge. The left side and end of the tool bit are ground with sufficient clearance to

permit the cutting edge to bear upon the workpiece without the heel rubbing on the work. The right-hand turning tool bit is ideal for taking light roughing cuts as well as general all-around machining.

A left-hand turning tool bit is the opposite of the right-hand turning tool bit, designed to cut when fed from left to right. This tool bit is used mainly for machining close in to a right shoulder.

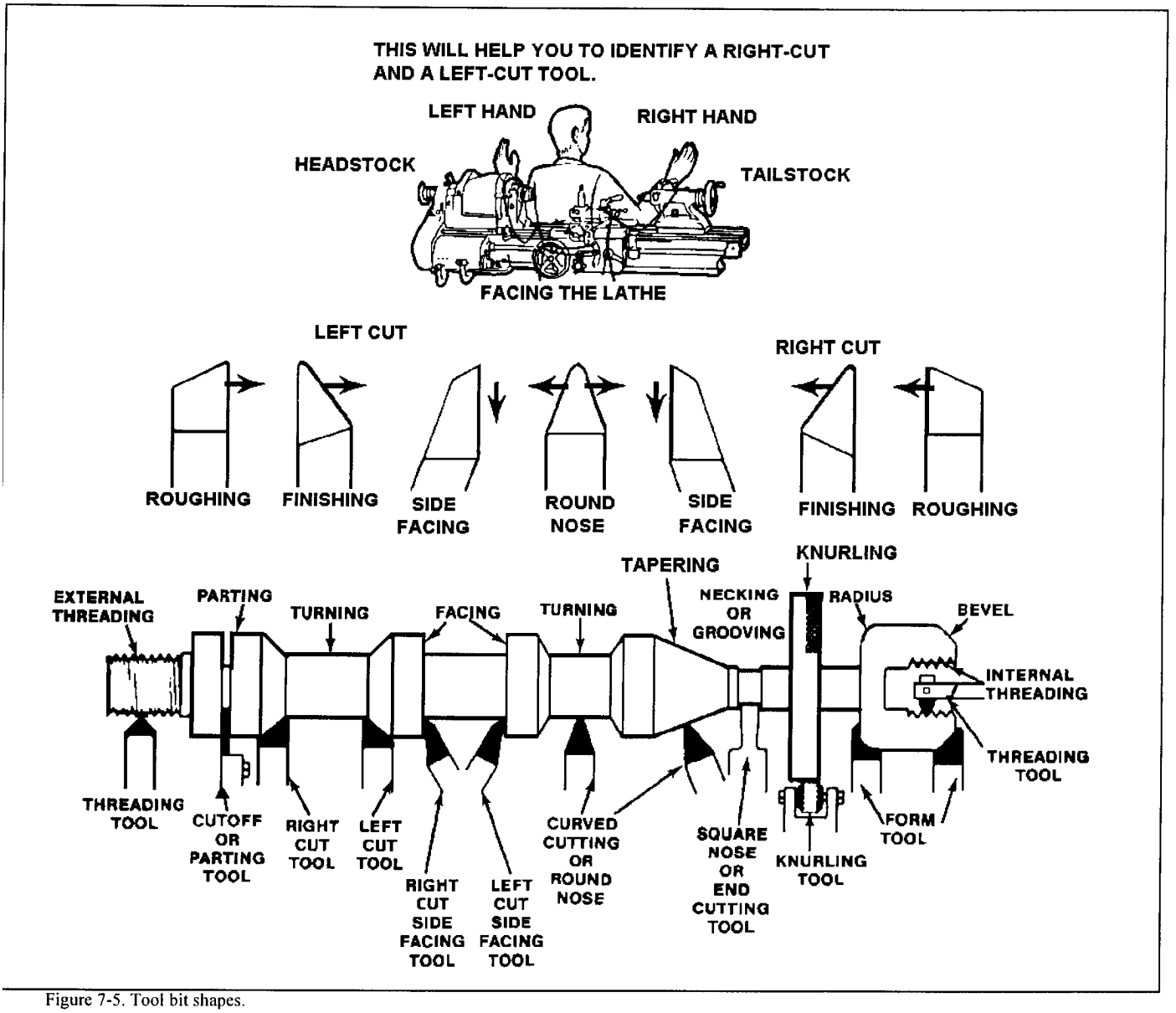

Figure 7-5. Tool bit shapes.

The round-nose turning tool bit is very versatile and can be used to turn in either direction for roughing and finishing cuts. No side rake angle is ground into the top face when used to cut in either direction, but a small back rake angle may be needed for chip removal. The nose radius is usually ground in the shape of a half-circle with a diameter of about 1/32 inch.

The right-hand facing tool bit is intended for facing on right-hand side shoulders and the right end of a workpiece. The cutting edge is on the left-hand side of the bit. and the nose is ground very sharp for machining into a square corner. The direction of feed for this tool bit should be away from the center axis of the work, not going into the center axis.

A left-hand facing tool bit is the opposite of the right-hand facing tool bit and is intend to machine and face the left sides of shoulders.

The parting tool bit, Figure 7-6, is also known as the cutoff tool bit. This tool bit has the principal cutting edge at the squared end of the bit that is advanced at a right angle into the workpiece. Both sides should have sufficient clearance to prevent binding and should be ground slightly narrower at the back than at the cutting edge. Besides being used for parting operations, this tool bit can be used to machine square corners and grooves.

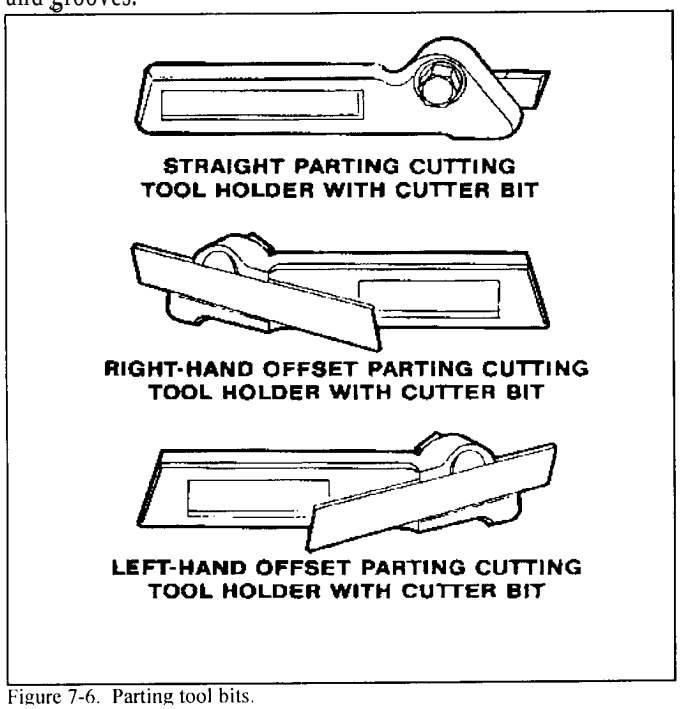

Figure 7-6. Parting tool bits.

Thread-cutting tool bits, Figure 7-7, are ground to cut the type and style of threads desired. Side and front clearances must be ground, plus the special point shape for the type of thread desired. Thread-cutting tool bits can be ground for standard 60° thread forms or for square, Acme, or special threads. Thread-cutting forms are discussed in greater detail later in this chapter.

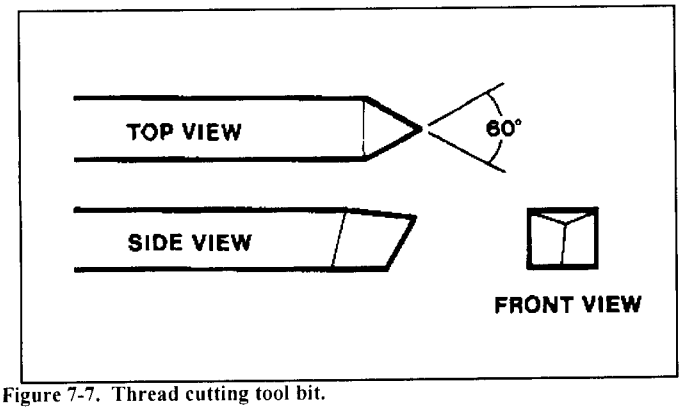

Figure 7-7. Thread cutting tool bit.

SPECIAL TYPES OF LATHE CUTTING TOOLS

Besides the common shaped tool bits, special lathe operations and heavy production work require special types of cutting tools. Some of the more common of these tools are listed below.

Tungsten carbide, tantalum carbide, titanium carbide. ceramic, oxide, and diamond-tipped tool bits (Figure 7-8). and cutting tool inserts are commonly used in high-speed production work when heavy cuts are necessary and where exceptionally hard and tough materials are encountered. Standard shapes for tipped tool bits are similar to high-speed steel-cutting tool shapes. Carbide and ceramic inserts can be square, triangular, round, or other shapes. The inserts are designed to be indexed or rotated as each cutting edge gets dull and then discarded. Cutting tool inserts are not intended for reuse after sharpening.

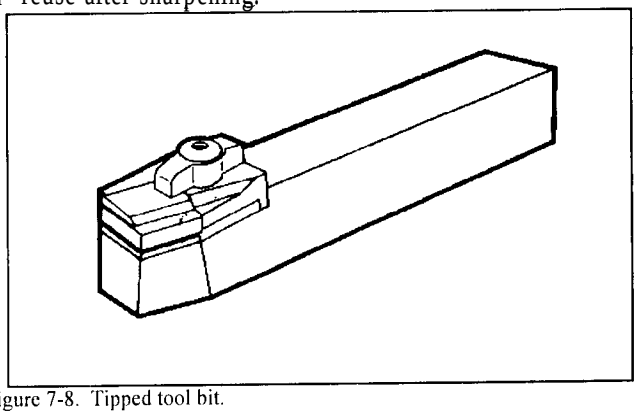

Figure 7-8. Tipped tool bit.

Specially formed thread cutter mounted in a thread "cutter holder (Figure 7-9). This tool is designed for production high-speed thread cutting operations. The special design of the cutter allows for sharp and strong cutting edges which need only to be resharpened occasionally by grinding the face. The cutter mounts into a special tool holder that mounts to the lathe tool post

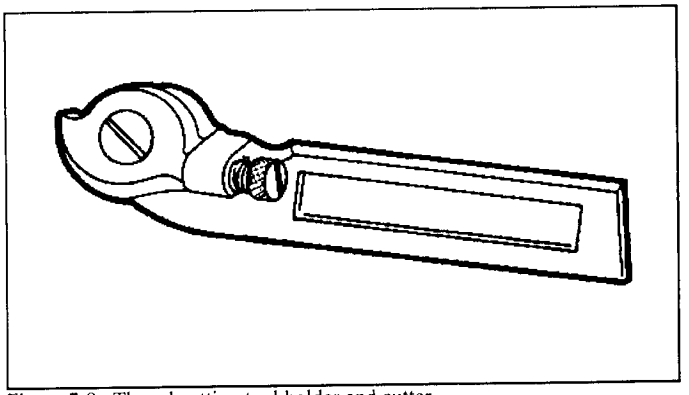

Figure 7-9. Thread cutting tool holder and cutter.

The common knurling tool, Figure 7-10, consists of two cylindrical cutters, called knurls, which rotate in a specially designed tool holder. The knurls contain teeth which are rolled against the surface of the workpiece to form depressed patterns on the workpiece. The common knurling tool accepts different pairs of knurls, each having a different pattern or pitch. The diamond pattern is most widely used and comes in three pitches: 14, 21, or 33. These pitches produce coarse, medium, and fine knurled patterns.

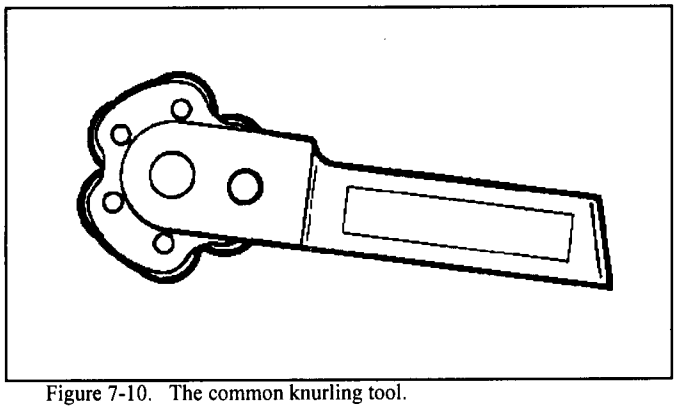

Figure 7-10. The common knurling tool.

Boring tool bits, Figure 7-11, are ground similar to left-hand turning tool bits and thread-cutting tool bits, but with more end clearance angle to prevent the heel of the tool bit from rubbing against the surface of the bored hole. The boring tool bit is usually clamped to a boring tool holder, but it can be a one-piece unit . The boring tool bit and tool holder clamp into the lathe tool post.

There is no set procedure to grinding lathe tool bit angles and shapes, but there are general guidelines that should be followed. Do not attempt to use the bench or pedestal grinder without becoming fully educated as to its safety, operation, and capabilities. In order to effectively grind a tool bit, the grinding wheel must have a true and clean face and be of the appropriate material for the cutting tool to be ground. Carbide tool bits must be ground on a silicon carbide grinding wheel to remove the very hard metal.

High-speed steel tool bits are the only tool bits that can effectively be ground on the bench or pedestal grinder when equipped with the aluminum oxide grinding wheel which is standard for most field and maintenance shops. Before grinding, shaping, or sharpening a high-speed steel tool bit, inspect the entire grinder for a safe setup and adjust the tool rests and guards as needed for tool bit grinding (Figure 7- 12).

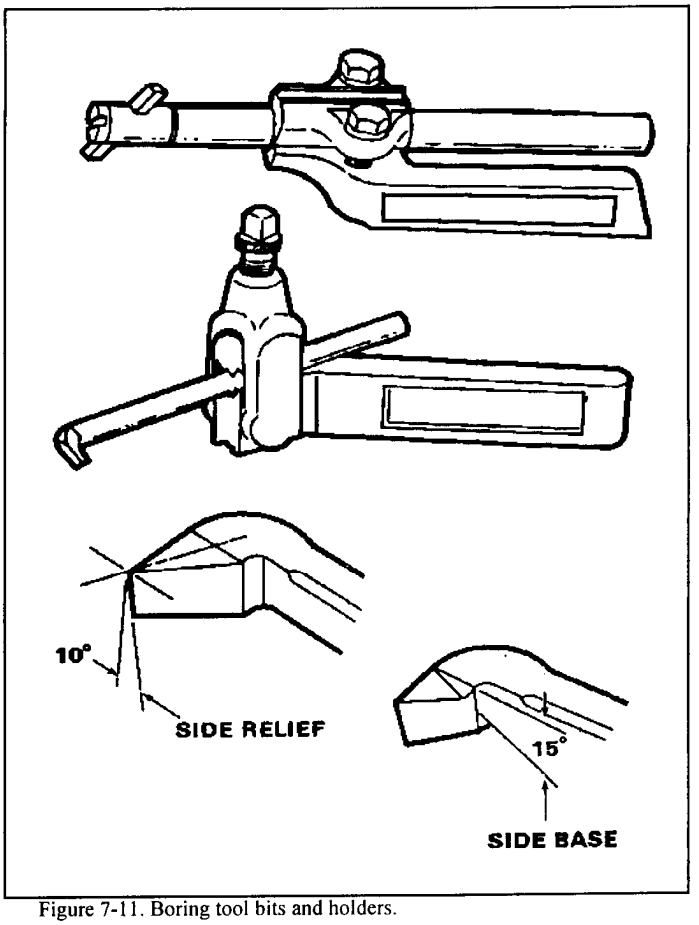

Figure 7-11. Boring tool bits and holders.

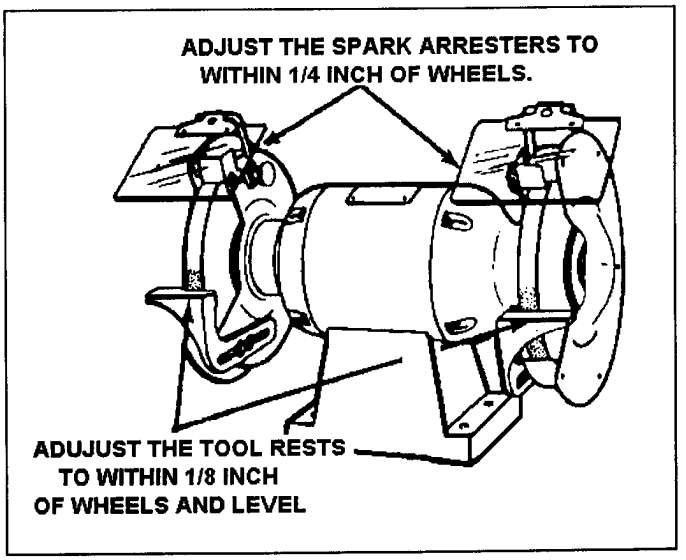

Figure 7-12. Grinder setup for lathe tool bit grinding.

Set the tool rest 1/8 inch or less from the wheel, and adjust the spark arrestor 1/4 inch or less. Each grinder is usually equipped with a coarse-grained wheel for rough grinding and a fine-grained wheel for fine and finish grinding. Dress the face of the grinding wheels as needed to keep a smooth, flat grinding surface for the tool bit. When grinding the side and back rake angles, ensure the grinding wheel has a sharp corner for shaping the angle. Dip the tool bit in water occasionally while grinding to keep the tool bit cool enough to handle and to avoid changing the property of the metal by overheating. Frequently inspect the tool bit angles with a protractor or special grinding gage. Grind the tool bit to the recommended angles in the reference for tool bit geometry (Table 7-l in Appendix A). After grinding to the finished shape, the tool bit should be honed lightly on an oilstone to remove any burrs or irregular high spots. The smoother the finish on the cutting tool, the smoother the finish on the work. Figure 7-13 shows the steps involved in grinding a round nose tool bit to be used for turning in either direction. As a safety note, never use the side of the grinding wheel to grind a tool bit, as this could weaken the bonding of the wheel and cause it to crack and explode.

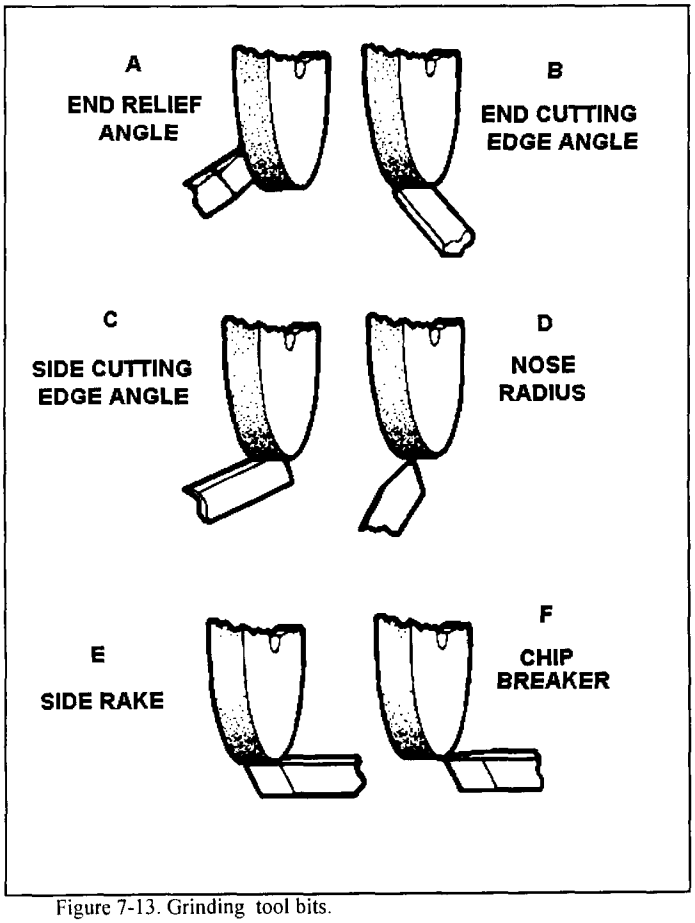

Figure 7-13. Grinding tool bits.

TOOL HOLDERS AND TOOL POSTS

Lathe tool holders are designed to securely and rigidly hold the tool bit at a fixed angle for properly machining a workpiece (Figure 7-14). Tool holders are designed to work in conjunction with various lathe tool posts, onto which the tool holders are mounted. Tool holders for high speed steel tool bits come in various types for different uses. These tool holders are designed to be used with the standard round tool post that usually-is supplied with each engine lathe (Figure 7-15). This tool post consists of the post, screw, washer, collar, and rocker, and fits into the T-slot of the compound rest.

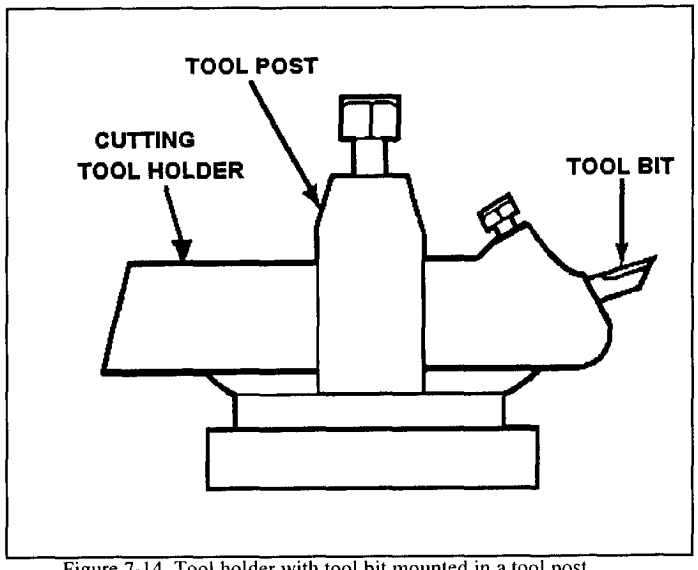

Figure 7-14. Tool holder with tool bit mounted in a tool post.

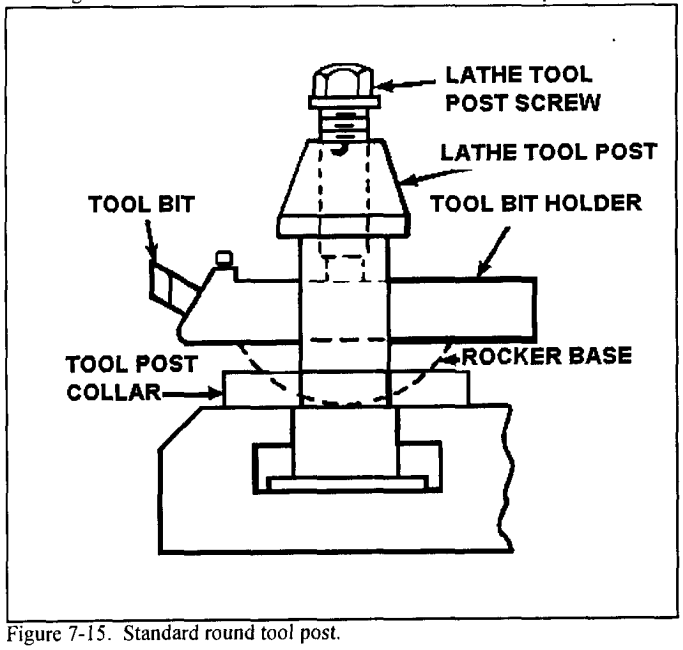

Figure 7-15. Standard round tool post.

Standard tool holders for high-speed steel cutting tools have a square slot made to fit a standard size tool bit shank. Tool bit shanks can be 1/4-inch, 5/16-inch, 3/8-inch, and greater, with all the various sizes being manufactured for all the different lathe manufacturer's tool holder models. Some standard tool holders for steel tool bits are the straight tool holder, right and left offset tool holder, and the zero rake tool holder designed for special carbide tool bits. Other tool holders to fit the standard round tool post include straight, left, and right parting tool holders, knurling tool holders, boring bar tool holders, and specially formed thread cutting tool holders.

The turret tool post (Figure 7-16) is a swiveling block that can hold many different tool bits or tool holders. Each cutting tool can quickly be swiveled into cutting position and clamped into place using a quick clamping handle. The turret tool post is used mainly for high-speed production operations.

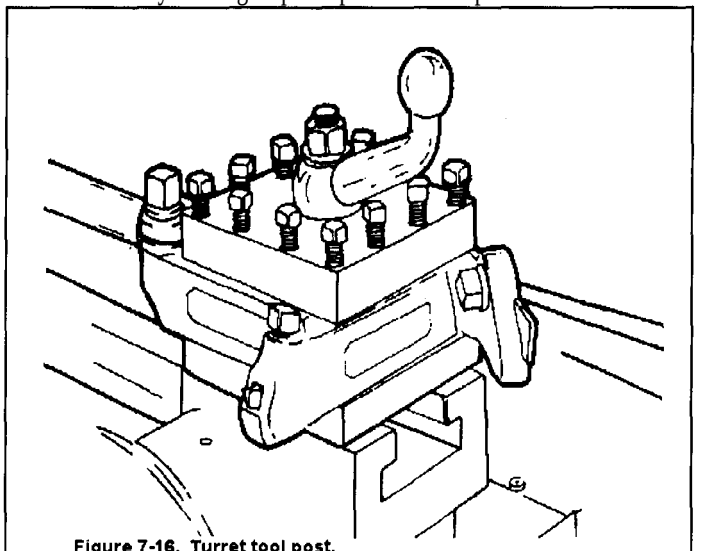

Figure 7-16. Turret tool post.

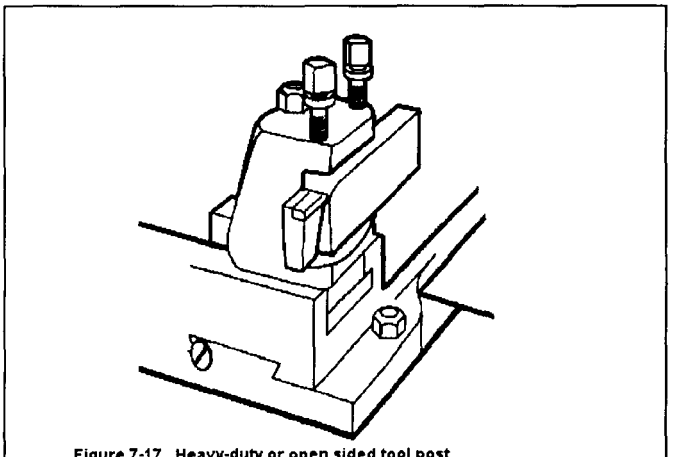

Figure 7-17. Heavy-duty or open sided tool post.

The heavy-duty or open-sided tool post (Figure 7-17) is used for holding a single carbide-tipped tool bit or tool holder. It is used mainly for very heavy cuts that require a rigid tool holder.

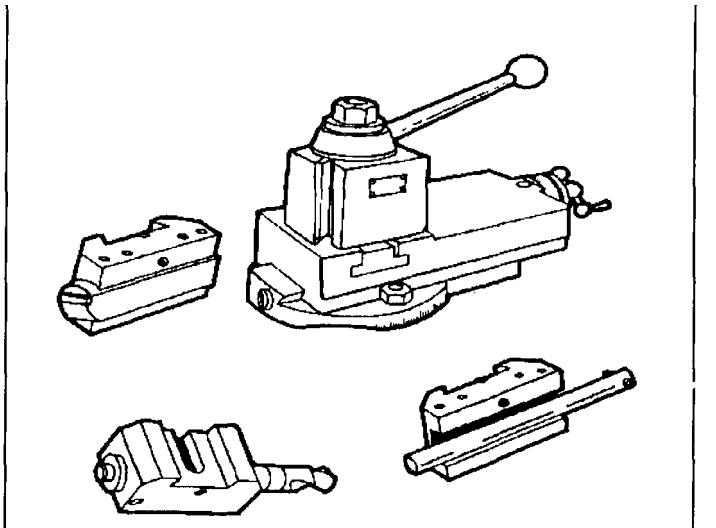

Figure 7-18. Quick change tool system.

The quick-change tool system (Figure 7-18) consists of a quick-change dovetail tool post with a complete set of matching dovetailed tool holders that can be quickly changed as different lathe operations become necessary. This system has a quick-release knob on the top of the tool post that allows tool changes in less than 5 seconds, which makes this system valuable for production machine shops.

WORK HOLDING DEVICES

Many different devices, such as chucks, collets, faceplates, drive plates, mandrels, and lathe centers, are used to hold and drive the work while it is being machined on a lathe. The size and type of work to be machined and the particular operation that needs to be done will determine which work holding device is best for any particular job. Another consideration is how much accuracy is needed for a job, since some work holding devices are more accurate than others. Operational details for some of the more common work holding devices follow.

The universal scroll chuck, Figure 7-19, usually has three jaws which move in unison as an adjusting pinion is rotated. The advantage of the universal scroll chuck is its ease of operation in centering work for concentric turning. This chuck is not as accurate as the independent chuck, but when in good condition it will center work within 0.002 to 0.003 inches of runout.

The jaws are moved simultaneously within the chuck by a scroll or spiral-threaded plate. The jaws are threaded to the scroll and move an equal distance inward or outward as the scroll is rotated by the adjusting pinion. Since the jaws are individually aligned on the scroll, the jaws cannot usually be reversed. Some manufactures supply two sets of jaws, one for internal work and one for external work. Other manufactures make the jaws in two pieces so the outside, or gripping surface may be reversed. which can be interchanged.

The universal scroll chuck can be used to hold and automatically center round or hexagonal workplaces. Having only three jaws, the chuck cannot be used effectively to hold square, octagonal, or irregular shapes.

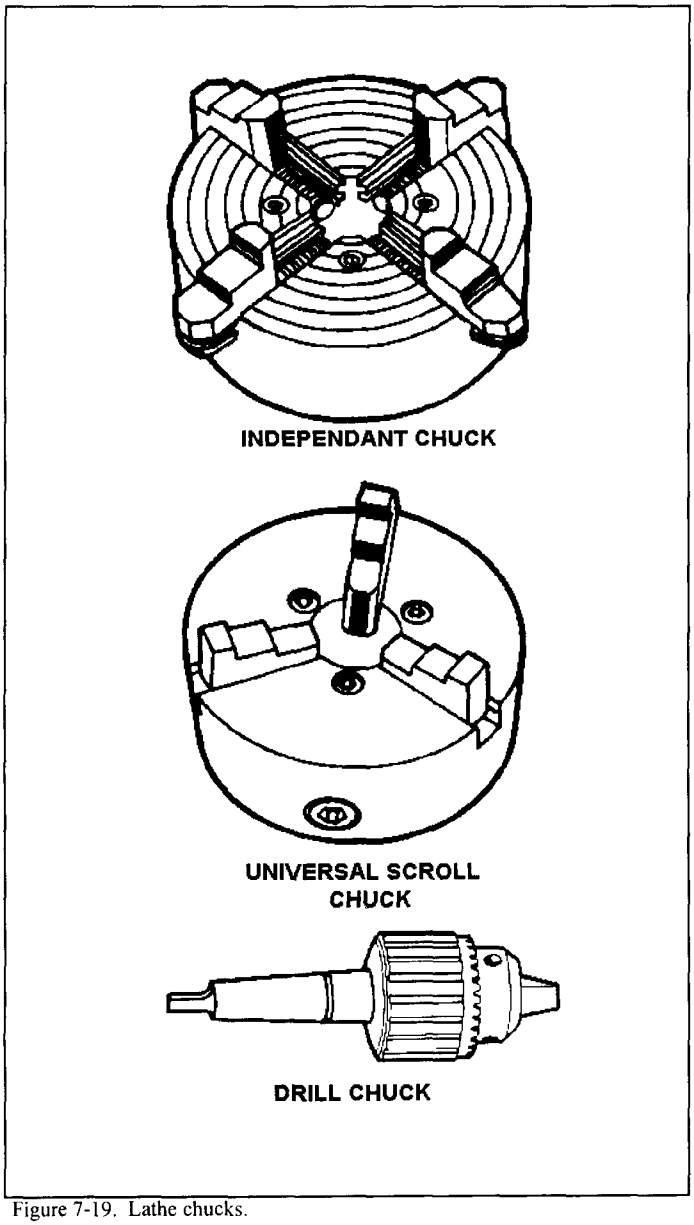

Figure 7-19. Lathe chucks.

The independent chuck, Figure 7-19, generally has four jaws which are adjusted individually on the chuck face by means of adjusting screws. The chuck face is scribed with concentric circles which are used for rough alignment of the jaws when chucking round workplaces. The final adjustment is made by turning the workpiece slowly by hand and using a dial indicator to determine it's concentricity. The jaws are then readjusted as necessary to align the workpiece within the desired tolerances.

The jaws of the independent chuck may be used as illustrated or may be reversed so that the steps face in the opposite direction; thus workplaces can be gripped either externally or internally. The independent chuck can be used to hold square, round, octagonal, or irregularly shaped workplaces in either a concentric or eccentric position due to the independent operation of each jaw.

Because of its versatility and capacity for fine adjustment, the independent chuck is commonly used for mounting odd-shaped workplaces which must be held with extreme accuracy.

A combination chuck combines the features of the independent chuck and the universal scroll chuck and can have either three or four jaws. The jaws can be moved in unison on a scroll for automatic centering or can be moved individually if desired by separate adjusting screws.

The drill chuck, Figure 7-19, is a small universal chuck which can be used in either the headstock spindle or the tailstock for holding straight-shank drills, reamers, taps, or small diameter workplaces. The drill chuck has three or four hardened steel jaws which are moved together or apart by adjusting a tapered sleeve within which they are contained. The drill chuck is capable of centering tools and small-diameter workplaces to within 0.002 or 0.003 inch when firmly tightened.

The collet chuck is the most accurate means of holding small workplaces in the lathe. The collet chuck consists of a spring machine collet (Figure 7-20) and a collet attachment which secures and regulates the collet on the headstock spindle of the lathe.

The spring machine collet is a thin metal bushing with an accurately machined bore and a tapered exterior. The collet has three lengthwise slots to permit its sides being sprung slightly inward to grip the workpiece. To grip the workpiece accurately, the collet must be no more than 0.005 inch larger or smaller than the diameter of the piece to be chucked. For this reason, spring machine collets are available in increments of 1/64 inch. For general purposes, the spring machine collets are limited in capacity to 1 1/8 inch in diameter.

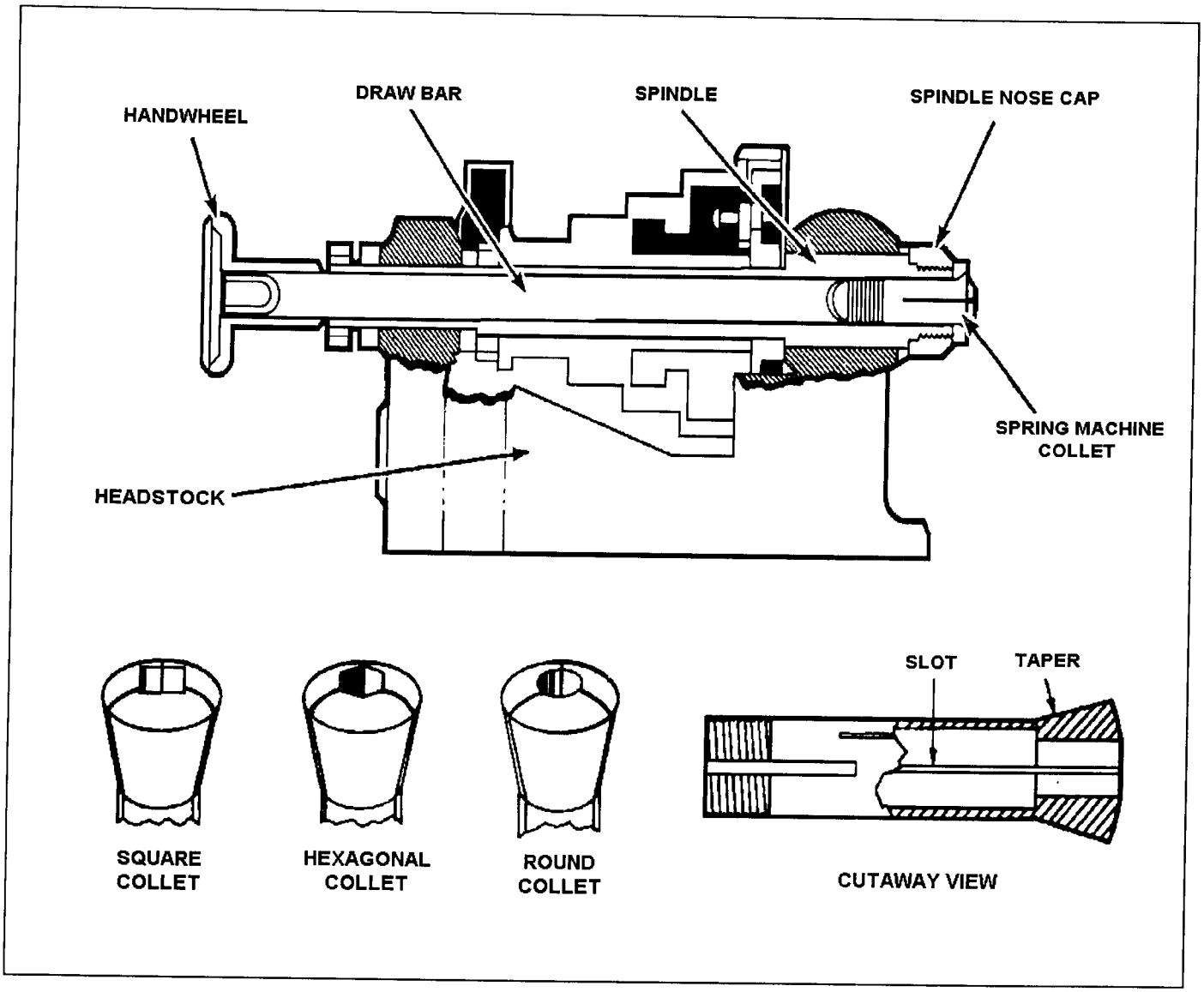

Figure 7-20. Spring machine collet chucks and installation method.

THE COLLET CHUCK IS THE MOST ACCURATE MEANS OF HOLDING SMALL WORKPIECES IN THE LATHE

For general purposes, the spring machine collets are limited in capacity to 1 1/8 inch in diameter.

The collet attachment consists of a collet sleeve, a drawbar, and a handwheel or hand lever to move the drawbar. The spring machine collet and collet attachment together form the collet chuck. Figure 7-20 illustrates a typical collet chuck installation. The collet sleeve is fitted to the right end of the headstock spindle. The drawbar passes through the headstock spindle and is threaded to the spring machine collet. When the drawbar is rotated by means of the hand wheel, it draws the collet into the tapered adapter, causing the collet to tighten on the workpiece. Spring machine collets are available in different shapes to chuck square and hexagonal workplaces of small dimensions as well as round workplaces.

The Jacob's spindle-nose collet chuck (Figure 7-21) is a special chuck is used for the Jacob's rubber flex collets. This chuck combines the functions of the standard collet chuck and drawbar into one single compact unit. The chuck housing has a handwheel on the outer diameter that turns to tighten or loosen the tapered spindle which holds the rubber flex collets. Rubber flex collets are comprised of devices made of hardened steel jaws in a solid rubber housing. These collets have a range of 1/8 inch per collet. The gripping power and accuracy remain constant throughout the entire collet capacity. Jacob's rubber flex collets are designed for heavy duty turning and possess two to four times the grip of the conventional split steel collet. The different sets of these collets are stored in steel boxes designed for holding the collets. Collets are normally stored in steel boxes designed for holding the collets.

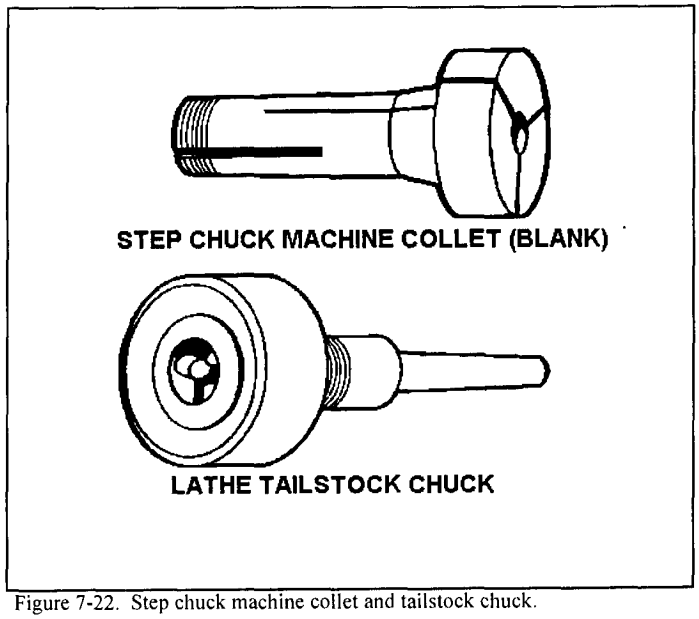

Figure 7-22. Step chuck machine collet and tailstock chuck.

The step chuck, Figure 7-22, is a variation of the collet chuck, and it is intended for holding small round workplaces or discs for special machining jobs. Step chucks are blank when new, and then are machined in the lathe for an exact fit for the discs to be turned. The step chuck machine collet, which is split into three sections like the spring machine collet, is threaded to the drawbar of the collet attachment.

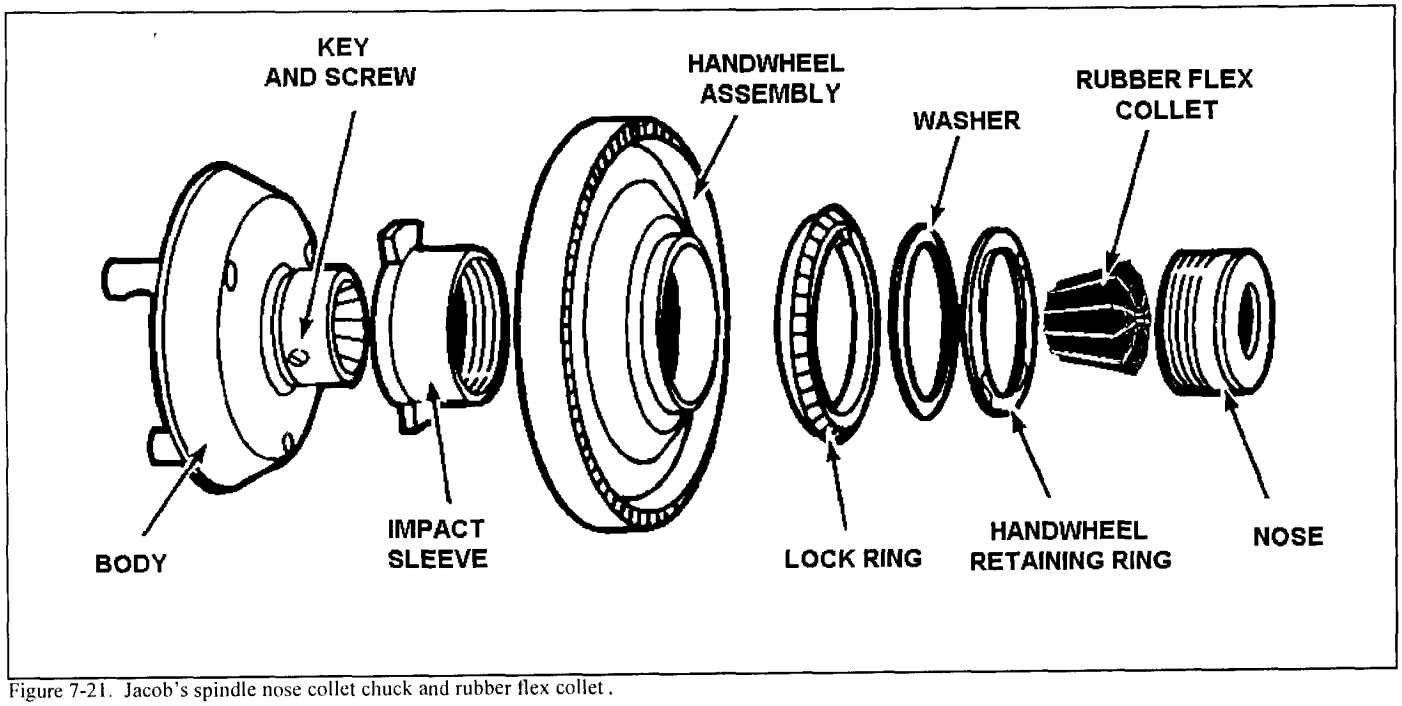

Figure 7-21. Jacob's spindle nose collet chuck and rubber flex collet.

The lathe tailstock chuck, Figure 7-22, is a device designed to support the ends of workplaces in the tailstock when a lathe center cannot be used conveniently. The chuck has a taper arbor that fits into the lathe tailstock spindle. The three bronze self-centering jaws of the chuck will accurately close upon workplaces between 1/4 and 1 inch in diameter. The bronze jaws provide a good bearing surface for the workpiece. The jaws are adjusted to the diameter of the workpiece and then locked in place.

A lathe faceplate, Figure 7-23, is a flat, round plate that threads to the headstock spindle of the lathe. The faceplate is used for irregularly shaped workplaces that cannot be successfully held by chucks or mounted between centers. The workpiece is either attached to the faceplate using angle plates or brackets or bolted directly to the plate. Radial T-slots in the faceplate surface facilitate mounting workplaces. The faceplate is valuable for mounting workplaces in which an eccentric hole or projection is to be machined. The number of applications of the faceplates depends upon the ingenuity of the machinist. A small faceplate known as a driving faceplate is used to drive the lathe dog for workpieces mounted between centers. The driving faceplate usually has fewer T-slots than the larger faceplates. When the workpiece is supported between centers, a lathe dog is fastened to the workpiece and engaged in a slot of the driving faceplate.

Lathe centers, Figure 7-24, are the most common devices for supporting workplaces in the lathe. Most lathe centers have a tapered point with a 60° included angle to fit workplace holes with the same angle. The workpiece is supported between two centers, one in the headstock spindle and one in the tailstock spindle. Centers for lathe work have standard tapered shanks that fit directly into the tailstock and into the headstock spindle using a center sleeve to convert the larger bore of the spindle to the smaller tapered size of the lathe center. The centers are referred to as live centers or dead centers. A live center revolves with the work and does not need to be lubricated and hardened. A dead center does not revolve with the work and must be hardened and heavily lubricated when holding work. Live and dead centers commonly come in matched sets, with the hardened dead center marked with a groove near the conical end point.

The ball bearing live center is a special center mounted in a ball bearing housing that lets the center turn with the work and eliminates the need for a heavily lubricated dead center. Ball bearing types of centers can have interchangeable points which make this center a versatile tool in all lathe operations. Modern centers of this type can be very accurate. Descriptions for some common lathe centers follow.

The male center or plain center is used in pairs for most general lathe turning operations. The point is ground to a 60° cone angle. When used in the headstock spindle where it revolves with the workpiece, it is commonly called a live center. When used in the tailstock spindle where it remains stationary when the workpiece is turned,
it is called a dead center. Dead centers are always made of hardened steel and must be lubricated very often to prevent overheating.

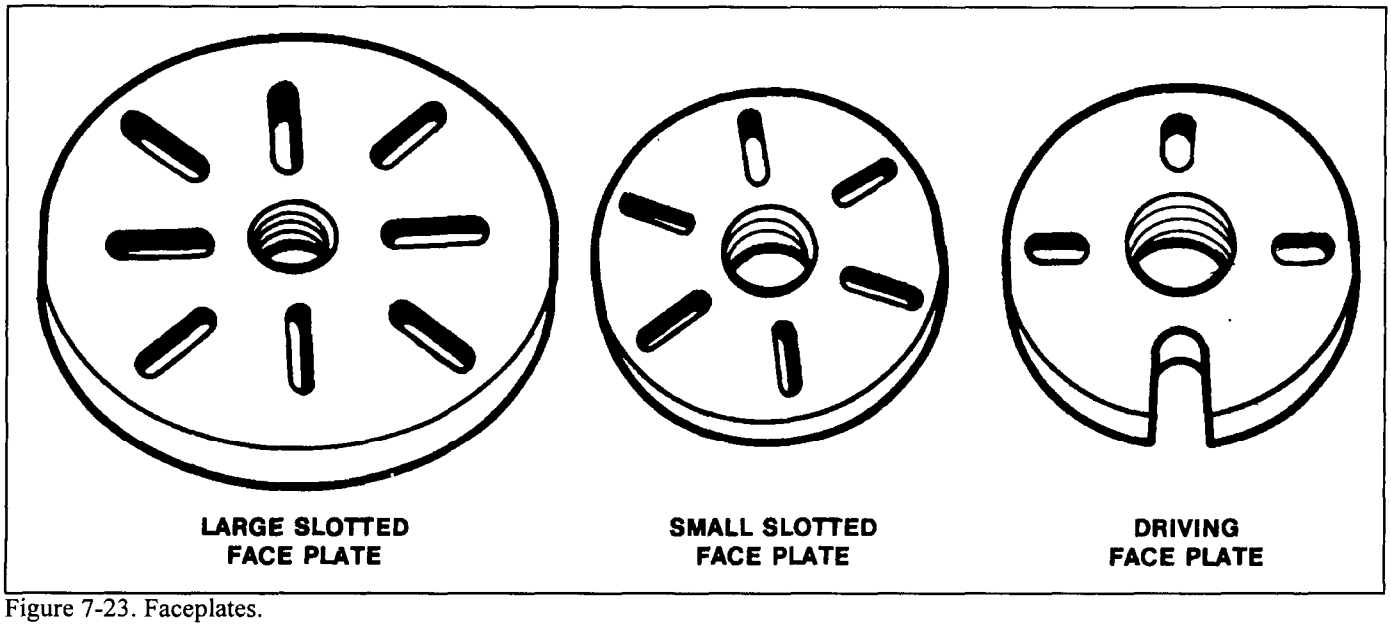

Figure 7-23. Faceplates.

The half male center is a male center that has a portion of the 60° cone cut away. The half male center is used as a dead center in the tailstock where facing is to be performed. The cutaway portion of the center faces the cutting tool and provides the necessary clearance for the tool when facing the surface immediately around the drilled center in the workpiece.

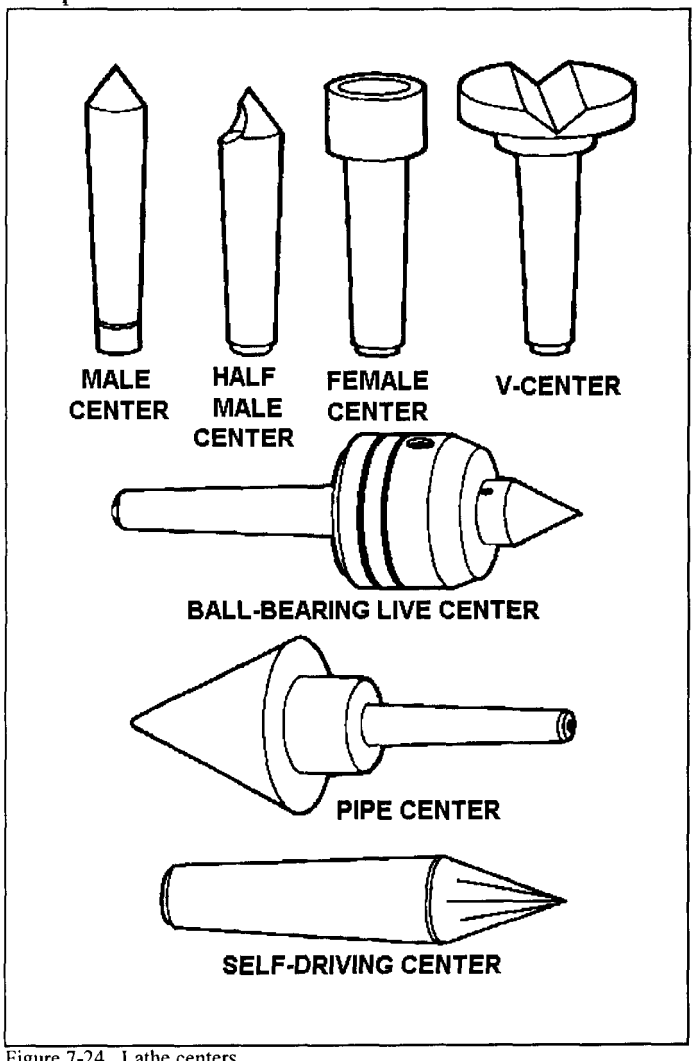

Figure 7-24. Lathe centers.

The V-center is used to support round workpieces at right angles to the lathe axis for special operations such as drilling or reaming. The pipe center is similar to the male center but its cone is ground to a greater angle and is larger in size. It is used for holding pipe and tubing in the lathe. The female center is conically bored at the tip and is used to support workplaces that are pointed on the end. A self-driving lathe center is a center with serrated ground sides that can grip the work while turning between centers without having to use lathe dogs.

A self driving center is a center that has grips installed on the outer edge of the center diameter that can be forced into the work to hold and drive the work when turning between centers without using lathe dogs.

Lathe dogs are cast metal devices used to provide a firm connection between the headstock spindle and the workpiece mounted between centers. This firm connection permits the workpiece to be driven at the same speed as the spindle under the strain of cutting. Three common lathe dogs are illustrated in Figure 7-25. Lathe dogs may have bent tails or straight tails. When bent-tail dogs are used, the tail fits into a slot of the driving faceplate. When straight-tail dogs are used, the tail bears against a stud projecting from the faceplate. The bent-tail lathe dog with headless setscrew is considered safer than the dog with the square head screw because the headless setscrew reduces the danger of the dog catching in the operator's clothing and causing an accident. The bent-tail clamp lathe dog is used primarily for rectangular workplaces.

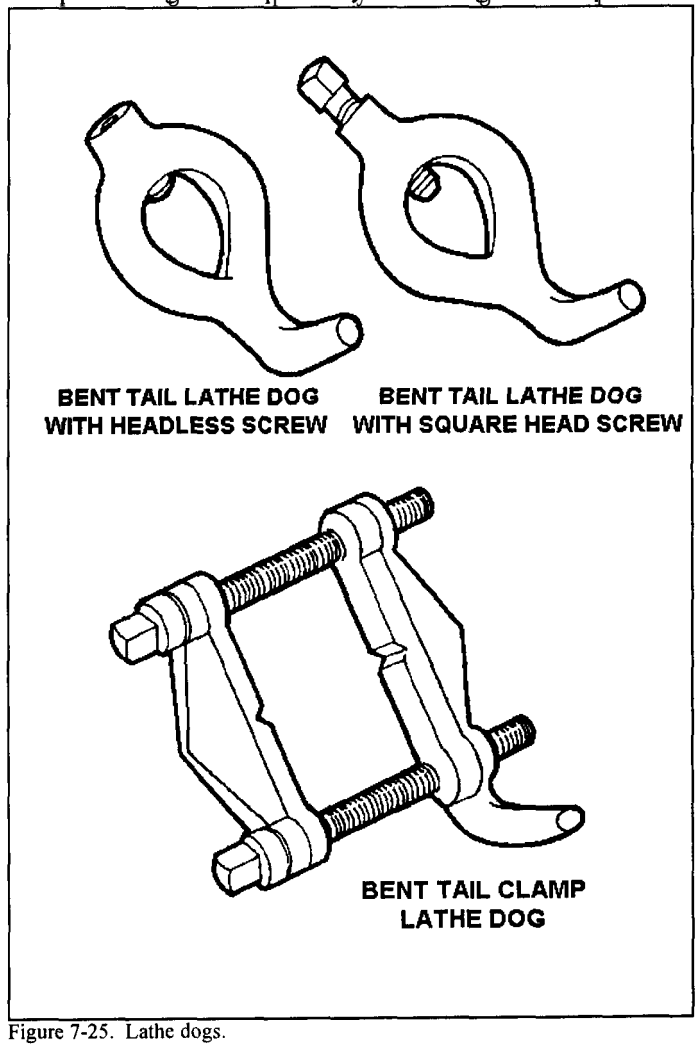

Figure 7-25. Lathe dogs.

MANDRELS

A workpiece which cannot be held between centers because its axis has been drilled or bored, and which is not suitable for holding in a chuck or against a faceplate, is usually machined on a mandrel. A mandrel is a tapered axle pressed into the bore of the workpiece to support it between centers.

A mandrel should not be confused with an arbor, which is a similar device but used for holding tools rather than workplaces. To prevent damage to the work, the mandrel should always be oiled before being forced into the hole. When turning work on a mandrel, feed toward the large end which should be nearest the headstock of the lathe.

A solid machine mandrel is generally made from hardened steel and ground to a slight taper of from 0.0005 to 0.0006 inch per inch. It has very accurately countersunk centers at each end for mounting between centers. The ends of the mandrel are smaller than the body and have machined flats for the lathe dog to grip. The size of the solid machine mandrel is always stamped on the large end of the taper. Since solid machine mandrels have a very slight taper, they are limited to workplaces with specific inside diameters.

An expansion mandrel will accept workplaces having a greater range of sizes. The expansion mandrel is, in effect, a chuck arranged so that the grips can be forced outward against the interior of the hole in the workpiece.

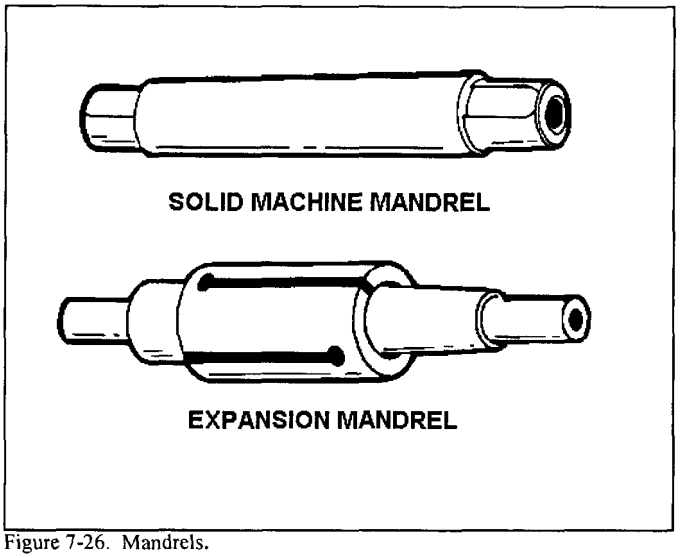

Figure 7-26. Mandrels.

LATHE ATTACHMENTS

The variety of work that can be performed on the lathe is greatly increased by the use of various lathe attachments. Some lathes come equipped with special attachments; some attachments must be ordered separately. Some common lathe attachments are the steady rest with cathead, the follower rest, the tool post grinding machine, the lathe micrometer stop, the lathe milling fixture, the lathe coolant attachment, the lathe indexing fixture, and the milling-grinding-drilling-slotting attachment (or Versa-Mil). The lathe indexing fixture and Versa-Mil unit are detailed in Chapter 9. Descriptions for the other lathe attachments follows.

RESTS

Workpieces often need extra support, especially long, thin workplaces that tend to spring away from the tool bit. Three common supports or rests are the steady rest, the cathead, and the follower rest (Figure 7-27).

Steady Rest.

The steady rest, also called a center rest, is used to support long workplaces for turning and boring operations. It is also used for internal threading operations where the workpiece projects a considerable distance from the chuck or faceplate. The steady rest is clamped to the lathe bed at the desired location and supports the workpiece within three adjustable jaws. The workpiece must be machined with a concentric bearing surface at the point where the steady rest is to be applied. The jaws must be carefully adjusted for proper alignment and locked in position. The area of contact must be lubricated frequently. The top section of the steady rest swings away from the bottom section to permit removal of the workpiece without disturbing the jaw setting.

Cathead

When the work is too small to machine a bearing surface for the adjustable jaws to hold, then a cathead should be used. The cathead has a bearing surface, a hole through which the work extends, and adjusting screws. The adjusting screws fasten the cathead to the work. They are also used to align the bearing surface so that it is concentric to the work axis. A dial indicator must be used to set up the cathead to be concentric and accurate.

Follower Rest

The follower rest has one or two jaws that bear against the workpiece. The rest is fastened to the lathe carriage so that it will follow the tool bit and bear upon the portion of the

workpiece that has just been turned. The cut must first be started and continued for a short longitudinal distance before the follower rest may be applied. The rest is generally used only for straight turning and for threading long, thin workplaces. Steady rests and follower rests can be equipped with ball-bearing surfaces on the adjustable jaws. These types of rests can be used without excessive lubricant or having to machine a polished bearing surface.

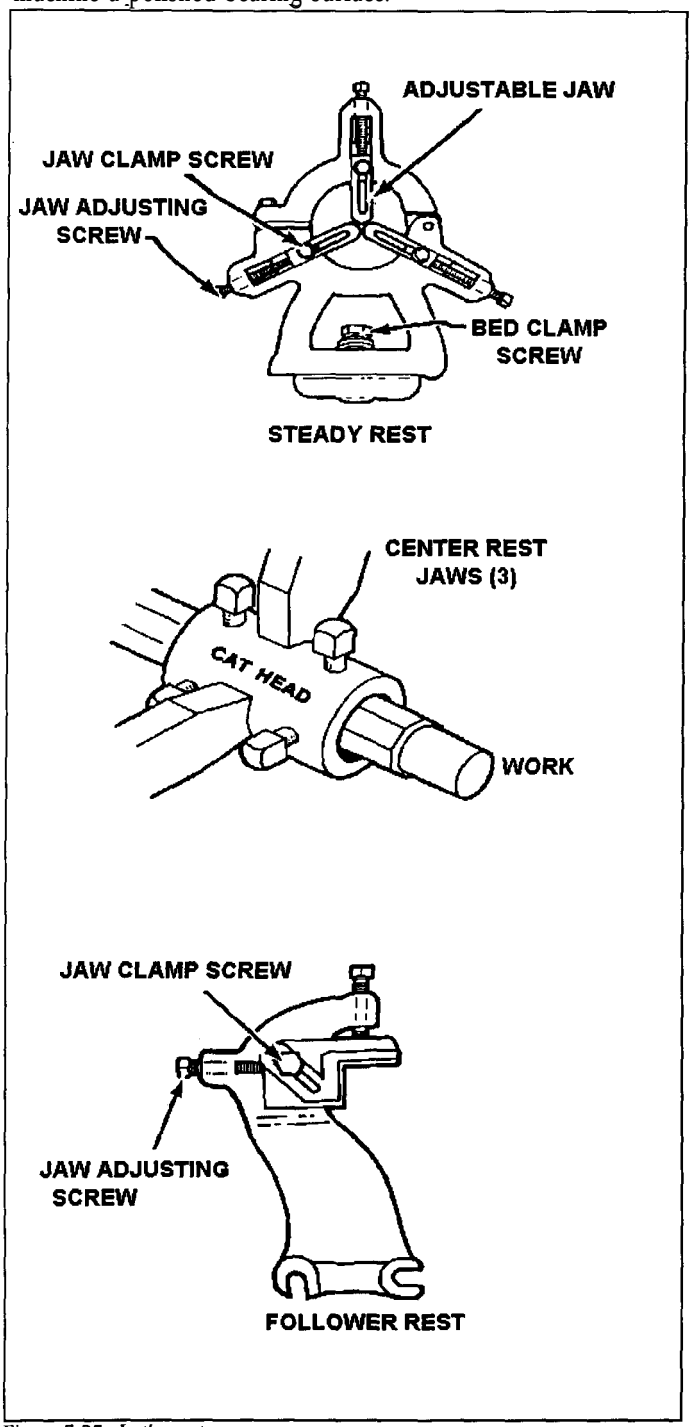

Figure 7-27. Lathe rests.

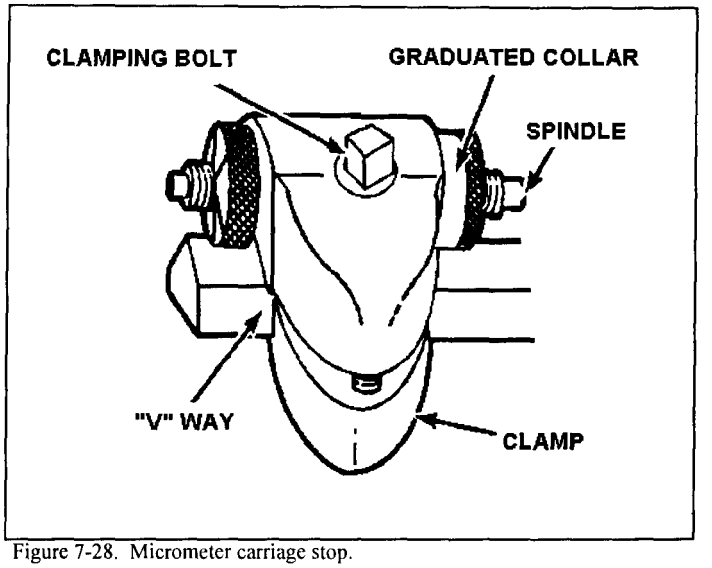

Figure 7-28. Micrometer carriage stop.

Micrometer Carriage Stop

The micrometer carriage stop, Figure 7-28, is used to accurately position the lathe carriage. The micrometer stop is designed so the carriage can be moved into position against the retractable spindle of the stop and locked into place. A micrometer gage on the stop enables carriage movement of as little as 0.001 inch. This tool is very useful when facing work to length, turning a shoulder, or cutting an accurate groove.

Tool Post Grinder

The tool post grinder (Figure 7-29) is a machine tool attachment specially designed for cylindrical grinding operations on the lathe. It consists primarily of a 1/4- or 1/3-horsepower electric motor and a wheel spindle connected by pulleys and a belt. The machine fastens to the compound rest of the lathe with a T-slot bolt which fits in the slot of the compound rest in the same manner as the lathe tool post. The tool post grinding machine mounts grinding abrasive wheels ranging from 1/4 inch to 3 or 4 inches in diameter for internal and external grinding operations. The pulleys on the wheel spindle and motor shaft are interchangeable to provide proper cutting speeds for the various wheel sizes. The larger grinding abrasive wheels used for external grinding are attached to the wheel spindle with an arbor. Small, mounted grinding abrasive wheels for internal grinding are fixed in a chuck which screws to the wheel spindle. The electric motor is connected to an electrical power source by a cable and plug. A switch is usually provided at the attachment to facilitate starting and stopping the motor.

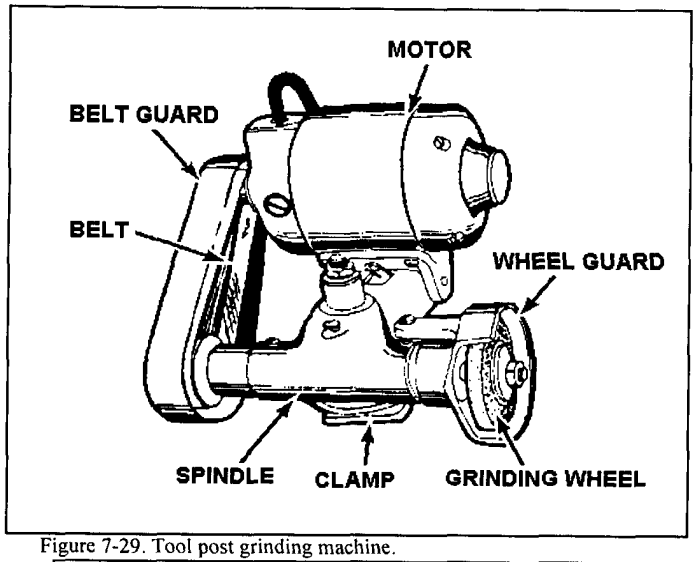

Figure 7-29. Tool post grinding machine.

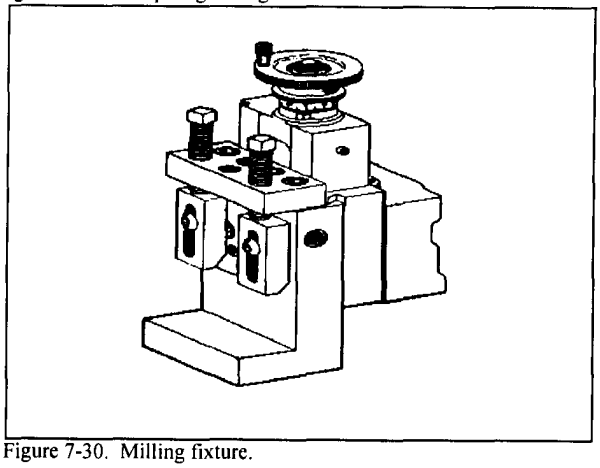

Figure 7-30. Milling fixture.

Lathe Milling Fixture

This is a fixture designed to provide the ability for limited milling operations. Many repair and fabrication jobs cannot be satisfactorily completed on the standard engine lathe, but with the lathe milling attachment, the small machine shop that is not equipped with a milling machine can mill keyslots, keyways, flats, angles, hex heads, squares, splines, and holes. For specific operating instructions and parts, refer to TM 9-3465-200-10.

TOOLS NECESSARY FOR LATHE WORK

In order to properly setup and operate most engine lathes, it is recommended to have the following tools on hand. A machinist tool box with all wrenches, screwdrivers, and common hand tools. A dial indicator may be necessary for some procedures on the lathe. References, charts, tables, and other predetermined data on machine operations may be useful to lathe operators. Keep all safety equipment, along with necessary cleaning marking, and lubricating equipment, in the immediate lathe area to use as needed.

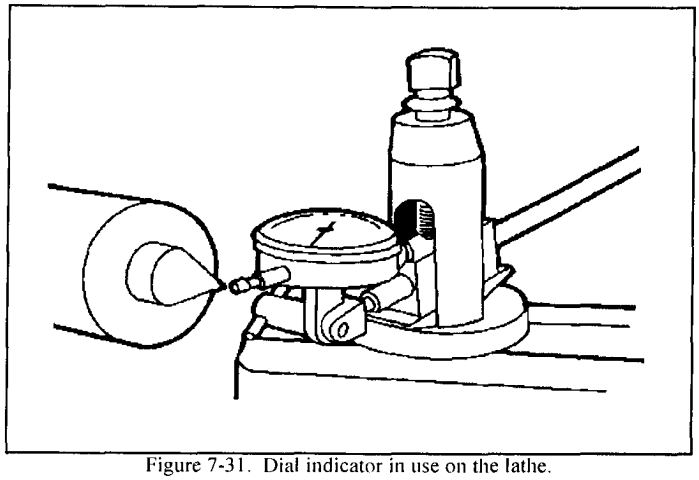

Figure 7-31. Dial indicator in use on the lathe.

CUTTING FLUIDS

The purposes of using cutting fluids on the lathe are to cool the tool bit and workpiece that are being machined, increase the life of the cutting tool, make a smoother surface finish, deter rust, and wash away chips. Cutting fluids can be sprayed, dripped, wiped, or flooded onto the point where the cutting action is taking place. Generally, cutting fluids should only be used if the speed or cutting action requires the use of cutting fluids. Descriptions of some common cutting fluids used on the lathe follow. Use Table 4-3 in Appendix A for additional information on cutting fluids.

Lard Oil

Pure lard oil is one of the oldest and best cutting oils. It is especially good for thread cutting, tapping, deep hole drilling, and reaming. Lard oil has a high degree of adhesion or oiliness, a relatively high specific heat, and its fluidity changes only slightly with temperature. It is an excellent rust preventive and produces a smooth finish on the workpiece. Because lard oil is expensive, it is seldom used in a pure state but is combined with other ingredients to form good cutting oil mixtures.

Mineral Oil

Mineral oils are petroleum-base oils that range in viscosity from kerosene to light paraffin oils. Mineral oil is very stable and does not develop disagreeable odors like lard oil; however, it lacks some of the good qualities of lard oil such as adhesion, oiliness, and high specific heat. Because it is relatively inexpensive, it is commonly mixed with lard oil or other chemicals to provide cutting oils with desirable characteristics. Two mineral oils, kerosene and turpentine, are often used alone for machining aluminum and magnesium. Paraffin oil is used alone or with lard oil for machining copper and brass.

Mineral-Lard Cutting Oil Mixture

Various mixtures of mineral oils and lard oil are used to make cutting oils which combine the good points of both ingredients but prove more economical and often as effective as pure lard oil.

Sulfurized Fatty-Mineral Oil

Most good cutting oils contain mineral oil and lard oil with various amounts of sulfur and chlorine which give the oils good antiweld properties and promote free machining. These oils play an important part in present-day machining because they provide good finishes on most materials and aid the cutting of tough material.

Soluble Cutting Oils

Water is an excellent cooling medium but has little lubricating value and hastens rust and corrosion. Therefore, mineral oils or lard oils which can be mixed with water are often used to form a cutting oil. A soluble oil and water mix has lubricating qualities dependent upon the strength of the solution. Generally, soluble oil and water is used for rough cutting where quick dissipation of heat is most important. Borax and trisodium phosphate (TSP) are sometimes added to the solution to improve its corrosion resistance.

Soda-Water Mixtures

Salts such as soda ash and TSP are sometimes added to water to help control rust. This mixture is the cheapest of all coolants and has practically no lubricating value. Lard oil and soap in small quantities are sometimes added to the mixture to improve its lubricating qualities. Generally, soda water is used only where cooling is the prime consideration and lubrication a secondary consideration. It is especially suitable in reaming and threading operations on cast iron where a better finish is desired.

White Lead and Lard Oil Mixture

White lead can be mixed with either lard oil or mineral oil to form a cutting oil which is especially suitable for difficult machining of very hard metals.

LAYING OUT AND MOUNTING WORK

There is relatively little layout work to be done for most lathe work because of the lathe's ability to guide the cutting tool accurately to the workpiece. If center holes must be located and drilled into the end of a workpiece for turning lay out and center-punch the workpiece using other methods. Some suggested methods are to use a bell-type center punch between centers and this cannot be accomplished on the lathe, (Figure 7-32), use hermaphrodite calipers to scribe intersecting arcs, use the centering head of the combination square, or use dividers (Figure 7-33).

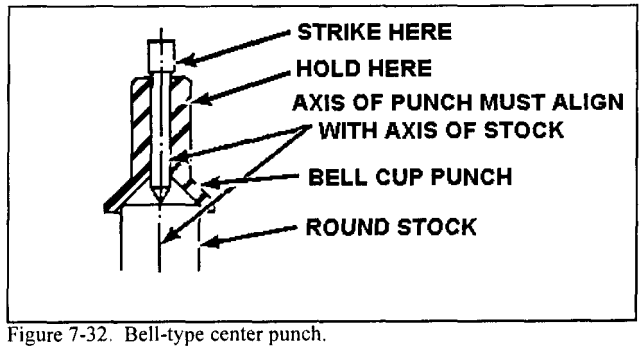

Figure 7-32. Bell-type center punch.

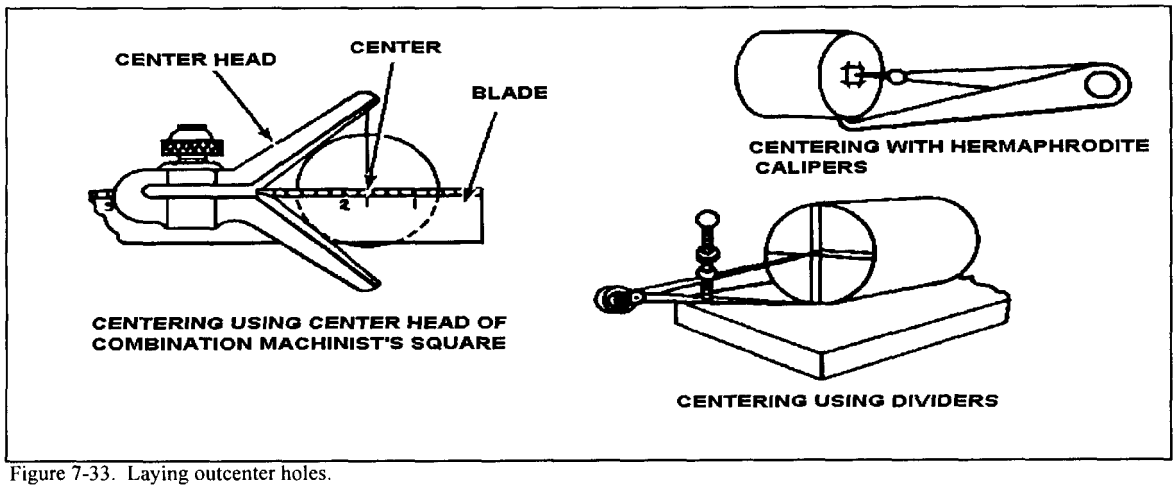

Figure 7-33. Laying outcenter holes.

METHODS OF MOUNTING WORK

Mounting Workpieces in Chucks

When installing the chuck or any attachment that screws onto the lathe headstock spindle, the threads and bearing surfaces of both spindle and chuck must be cleaned and oiled. In cleaning the internal threads of the chuck, a spring thread cleaner is very useful (Figure 7-34).

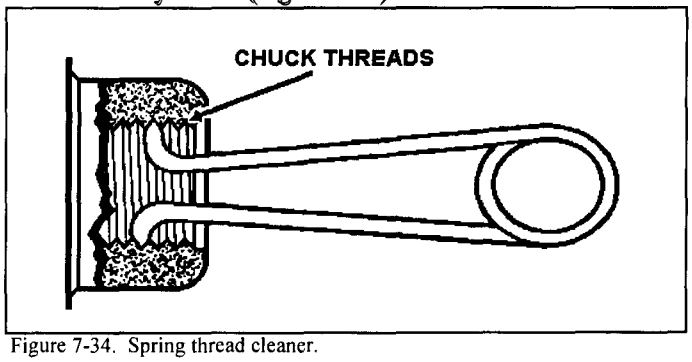

Figure 7-34. Spring thread cleaner.

Turn the spindle so that the key is facing up and lock the spindle in position. Make sure that the spindle and chuck taper are free of grit and chips. Place the chuck in position on the spindle. Engage the draw nut thread and tighten by applying four or five hammer blows on the spanner wrench engaged with the draw nut. Rotate the spindle 180°, engage the spanner wrench, and give four or five solid hammer blows to the spanner wrench handle. The workpiece is now ready for mounting.

Work automatically centers itself in the universal (3 jaw) scroll chuck, drill chuck, collet chucks, and step chuck, but must be manually centered in the independent (4 jaw) chuck. To center work in the independent chuck, line the four jaws up to the concentric rings on the face of the chuck, as close to the required diameter as possible.

Mount the workpiece and tighten the jaws loosely onto the workpiece (Figure 7-35). Spin the workpiece by hand and make approximate centering adjustments as needed, then firmly tighten the jaws.

For rough centering irregularly shaped work, first measure the outside diameter of the workpiece, then open the four jaws of the chuck until the workpiece slides in. Next tighten each opposing jaw a little at a time until the workpiece is held firmly, but not too tightly. Hold a piece of chalk near the workpiece and revolve the chuck slowly with your left hand. Where the chalk touches is considered the high side. Loosen the jaw opposite and tighten the jaw where the chalk marks are found. Repeat the process until the workpiece is satisfactorily aligned.

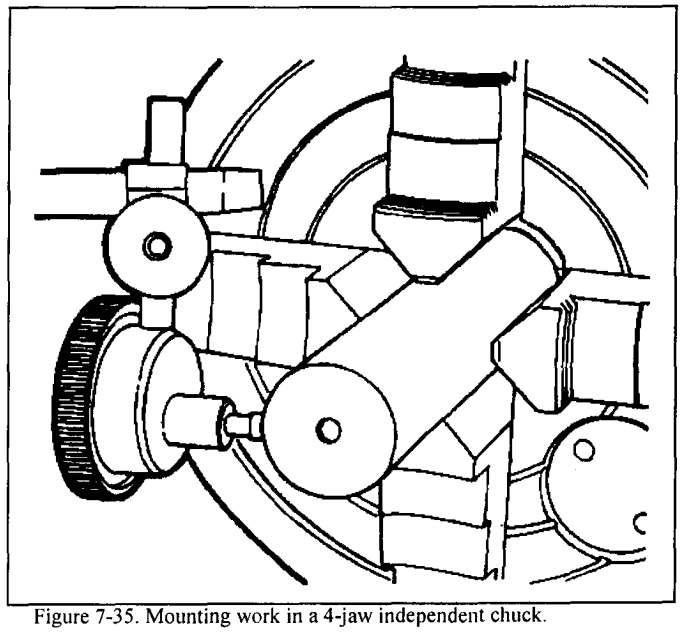

Figure 7-35. Mounting work in a 4-jaw independent chuck.

To center a workpiece having a smooth surface such as round stock, the best method is to use a dial test indicator. Place the point of the indicator against the outside or inside diameter of the workpiece. Revolve the workpiece slowly by hand and notice any deviations on the dial. This method will indicate any inaccuracy of the centering in thousandths of an inch.

If an irregularly shaped workpiece is to be mounted in the independent chuck, then a straight, hardened steel bar can be used with a dial indicator to align the workpiece. Experienced machinists fabricate several sizes of hardened steel bars, ground with a 60° point, that can be mounted into the drill chuck of the tailstock spindle and guided into the center-punched mark on the workpiece. A dial indicator can then be used to finish aligning the workpiece to within 0.001 inch. If a hardened steel bar is not readily available, a hardened center mounted in the tailstock spindle may be used to align the work while using a dial indicator on the chuck jaws. This method is one of several ways to align a workpiece in an independent chuck. Ingenuity and experience will increase the awareness of the machine operator to find the best method to set up the work for machining.

When removing chucks from the lathe, always use a wooden chuck block under the chuck to support the chuck on the lathe ways. Use care to avoid dropping the chuck on the ways, since this can greatly damage the lathe ways or crush the operator's hands.

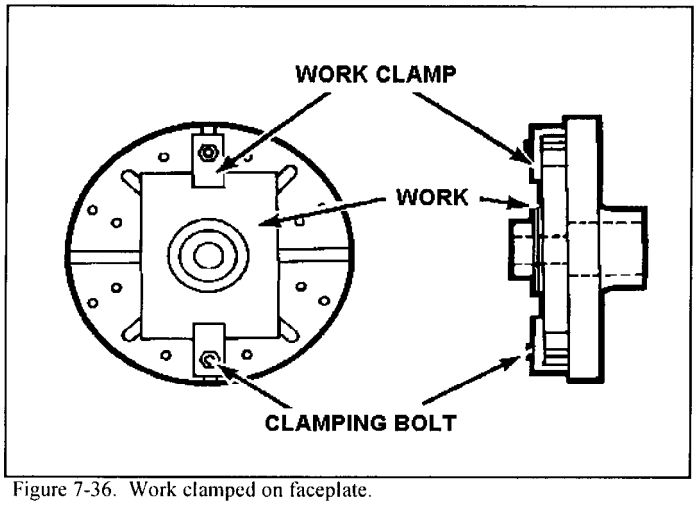

Figure 7-36. Work clamped on faceplate.

Mounting Work to Faceplates

Mount faceplates in the same manner as chucks. Check the accuracy of the faceplate surface using a dial indicator, and true the-faceplate surface by taking a light cut if necessary. Do not use faceplates on different lathes, since this will cause excessive wear of the faceplate due to repeated truing cuts having to be taken. Mount the workpiece using T-bolts and clamps of the correct sizes (Figure 7-36). Ensure all surfaces are wiped clean of burrs, chips, and dirt. When a heavy piece of work is mounted off center, such as when using an angle plate, use a counterweight to offset the throw of the work and to minimize vibration and chatter. Use paper or brass shims between the work and the faceplate to protect the delicate surface of the faceplate. After mounting the work to an approximate center location, use a dial indicator to finish accurate alignment.

Mounting Work Between Centers

Before mounting a work- piece between centers, the workpiece ends must be center- drilled and countersunk. This can be done using a small twist drill followed by a 60° center countersink or, more commonly, using a countersink and drill (also commonly called a center drill). It is very important that the center holes are drilled and countersunk so that they will fit the lathe centers exactly. Incorrectly drilled holes will subject the lathe centers to unnecessary wear and the workpiece will not run true because of poor bearing surfaces. A correctly drilled and countersunk hole has a uniform 60° taper and has clearance at the bottom for the point of the lathe center. Figure 7-37 illustrates correctly and incorrectly drilled center holes. The holes should have a polished appearance so as not to score the lathe centers. The actual drilling and countersinking of center holes can be done on a drilling machine or on the lathe itself. Before attempting to center drill using the lathe, the end of the workpiece must be machined flat to keep the center drill from running off center.

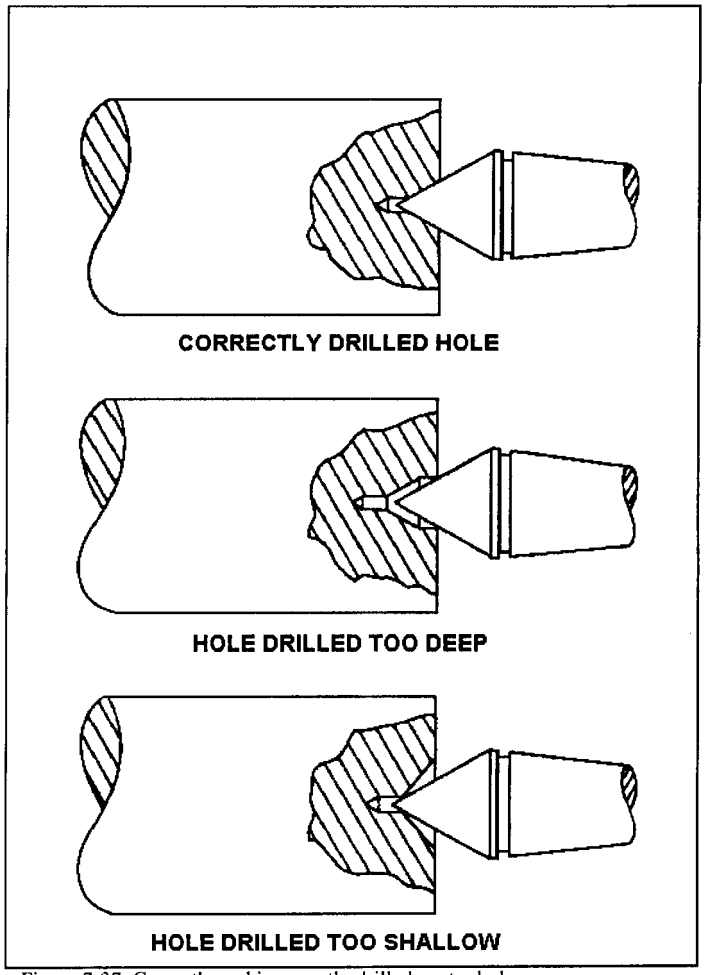

Figure 7-37. Correctly and incorrectly drilled center hole.

Mount the work in a universal or independent chuck and mount the center drill in the lathe tailstock (Figure 7-38). Refer to the section of this chapter on facing and drilling on the lathe, prior to doing this operation. Center drills come in various sizes for different diameters of work (Figure 7-39). Calculate the correct speed and hand feed into the workpiece. Only drill into the workpiece about 2/3 of the body diameter.

high speeds and feed them into the work slowly to avoid breaking off the drill point inside the work. If this happens, the work must be removed from the chuck and the point extracted. This is a time-consuming job and could ruin the workpiece.

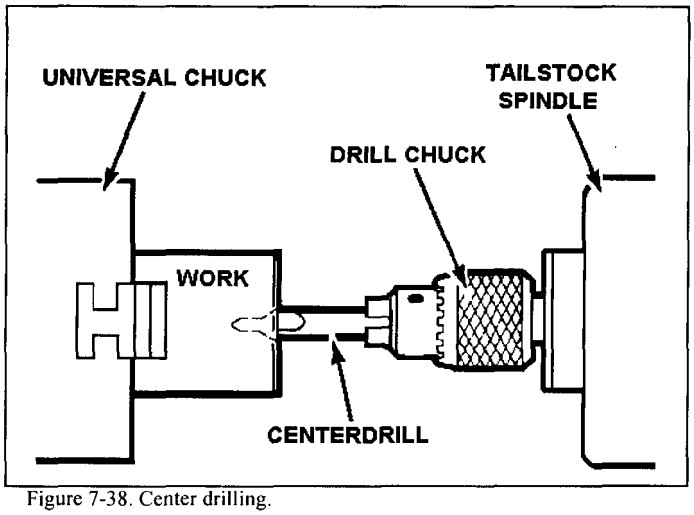

Figure 7-38. Center drilling.

To mount work between centers, the operator must know how to insert and remove lathe centers. The quality of workmanship depends as much on the condition of the lathe centers as on the proper drilling of the center holes. Before mounting lathe centers in the headstock or tailstock, thoroughly clean the centers, the center sleeve, and the tapered sockets in the headstock and tailstock spindles. Any dirt or chips on the centers or in their sockets will prevent the centers from seating properly and will cause the centers to run out of true.

Install the lathe center in the tailstock spindle with a light twisting motion to ensure a clean fit. Install the center sleeve into the headstock spindle and install the lathe center into the center sleeve with a light twisting motion.

To remove the center from the headstock spindle, hold the pointed end with a cloth or rag in one hand and give the center a sharp tap with a rod or knockout bar inserted through the hollow headstock spindle.

To remove the center from the tailstock, turn the tailstock handwheel to draw the tailstock spindle into the tailstock. The center will contact the tailstock screw and will be bumped loose from its socket.

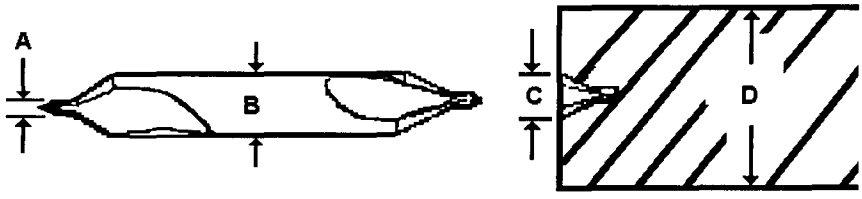

SIZE	A	B	C	D
1	3/64”	.125	3\32	3/16”TO 5/16”
2	5/64”	.1875	9/64	3/8” TO 1”
3	7/64”	.250	3/16	1 1/4” TO 2”
4	1/8”	.3125	15/64	2 1/4” TO 4”
5	3/16”	.4375	21/64	4” TO 6”

Figure 7-39. Common sizes for combination countersink and centerdrill.

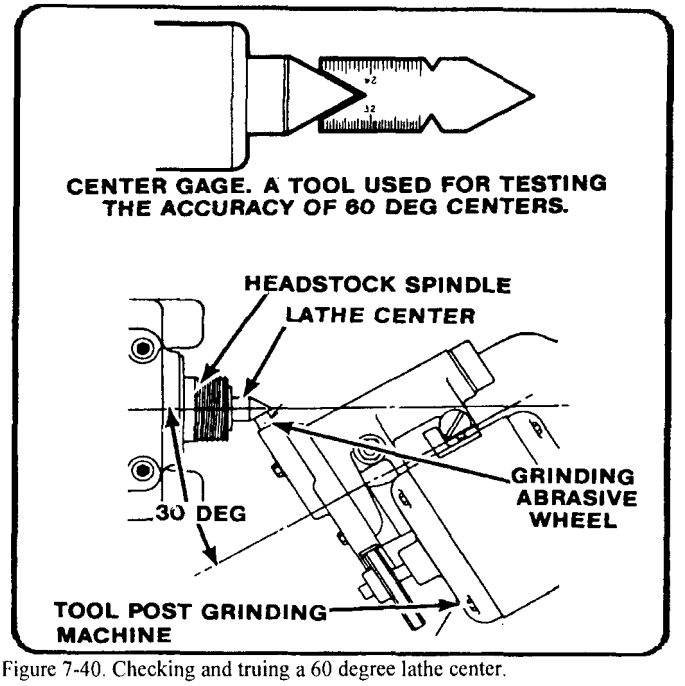

Figure 7-40. Checking and truing a 60 degree lathe center.

After mounting the headstock and tailstock centers, the accuracy of the 60° point should be checked using a center gage or a dial indicator. If the center in the headstock is not at 60°, or is scarred and burred, it must be trued while inserted in the lathe headstock spindle. If the headstock center is a soft center (a center that is not heat-treated and hardened), it can be turned true with the lathe tool bit. If the center in the headstock is hardened, it must be ground with a tool post grinding machine to get a true surface (Figure 7-40).

To turn a soft center true with the lathe, first set up the tool bit for right hand turning, center the tool bit; then, rotate the compound rest to an angle of 30° to the axis of the lathe (Figure 7-41). The lathe speed should be set for a finish cut, and the feed is supplied by cranking the handwheel of the compound rest, thus producing a clean and short steep taper with an included angle of 60°. Once trued, the center should stay in place until the operation is completed. If the center must be removed, mark the position on the center and headstock for easy realignment later.

Lathe centers must be parallel with the ways of the lathe in order to turn workplaces straight and true. Before beginning each turning operation, the center alignment should be checked.

The tailstock may be moved laterally to accomplish this alignment by means of adjusting screws after it has been released from the ways. Two zero lines are located at the rear of the tailstock and the centers are approximately aligned when these lines coincide (Figure 7-42). This alignment may be checked by moving the tailstock up close to the headstock so that the centers almost touch, and observing their relative positions (Figure 7-42).

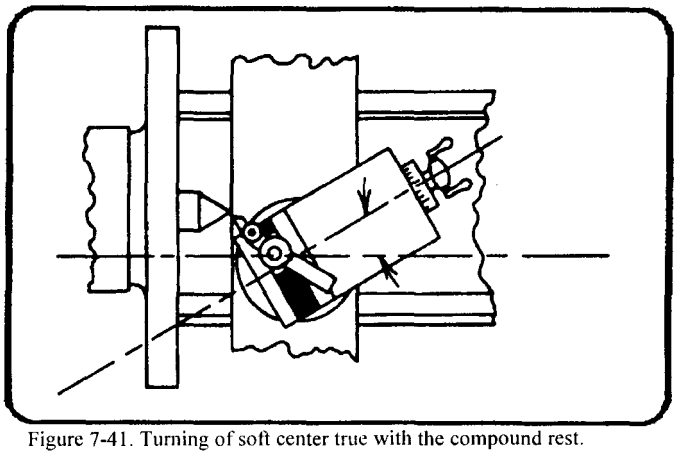
Figure 7-41. Turning of soft center true with the compound rest.

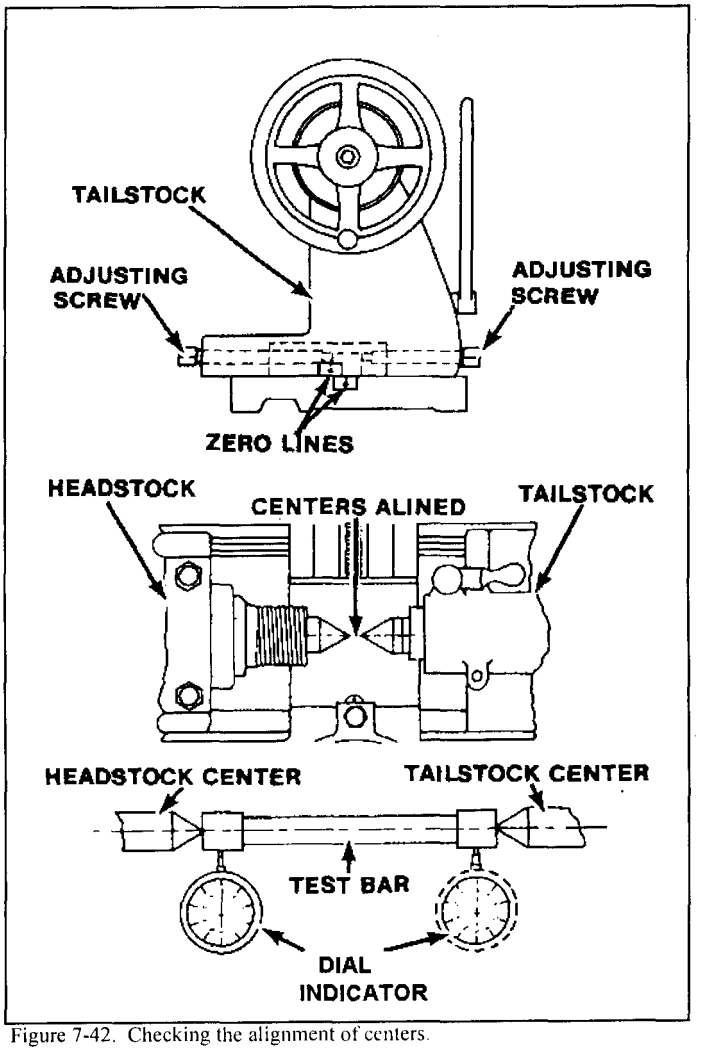

Figure 7-42. Checking the alignment of centers.

The most accurate method of checking alignment of centers is by mounting the workpiece between centers and taking light cuts at both ends without changing the carriage adjustments. Measure each end of this cut with calipers or a micrometer. If the tailstock end is greater in diameter than the headstock end, the tailstock is moved toward the operator. If the tailstock end is smaller in diameter than the headstock end, the tailstock is moved away from the operator. Take additional cuts in the same manner after each adjustment until both cuts measure the same.

To setup the workpiece between centers on the lathe, a driving faceplate (drive plate) and lathe dog must be used. (Figure 7-43). Make sure that the external threads of the headstock spindle are clean before screwing on the driving faceplate. Screw the faceplate securely onto the spindle. Clamp the lathe dog on the workpiece so that its tail hangs over the end of the workpiece. If the workpiece is finished, place a shim of soft material such as brass between the setscrew of the dog and workpiece. Mount the workpiece between the centers. Make sure that the lathe dog tail tits freely in the slot of the faceplate and does not bind. Sometimes, the tailstock center is a dead center and does not revolve with the workpiece, so it may require lubrication. A few drops of oil mixed with white lead should be applied to the center before the workpiece is set up. The tailstock should

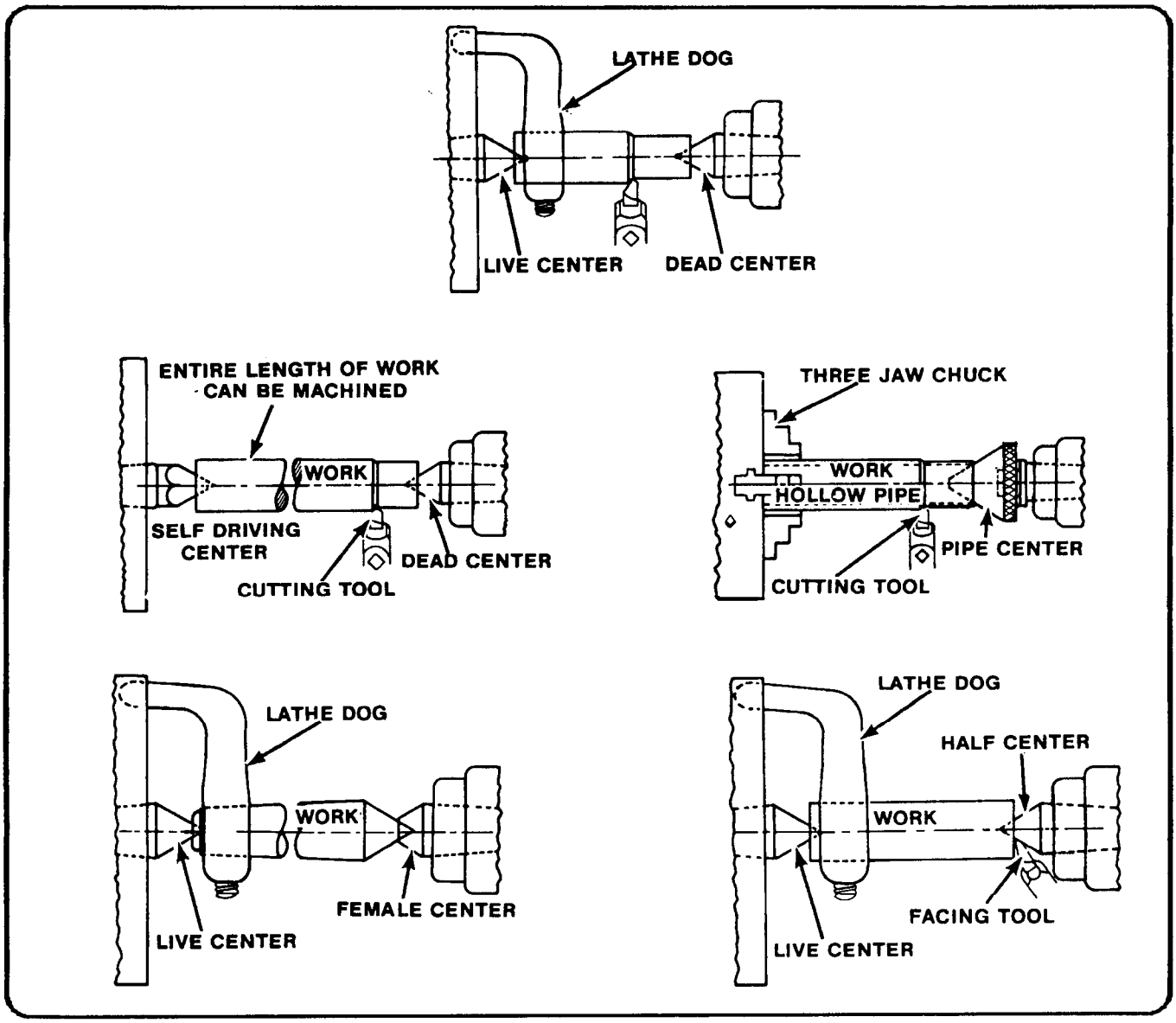

Figure 7-43. Holding work between centers.

be adjusted so that the tailstock center fits firmly into the center hole of the workpiece but does not bind. The lathe should be stopped at intervals and additional oil and white lead mixture applied to the dead center to prevent overheating harm to the center and the workpiece.

Mounting Work on Mandrels

To machine a workpiece of an odd shape, such as a wheel pulley, a tapered mandrel is used to hold and turn the work. The mandrel must be mounted between centers and a drive plate and lathe dog must be used. The centers must be aligned and the mandrel must be free of burrs. Mount the workpiece onto a lubricated mandrel of the proper size by using an arbor press. Ensure that the lathe dog is secured to the machined flat on the end of the mandrel and not on the smooth surface of the mandrel taper (Figure 7-44). If expansion bushings are to be used with a mandrel, clean and care for the expansion bushings in the same manner as a normal mandrel.

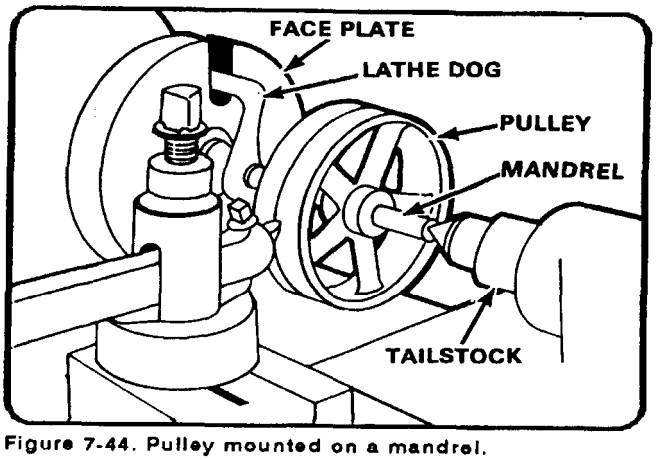

Figure 7-44. Pulley mounted on a mandrel.

Always feed the tool bit in the direction of the large end of the mandrel, which is usually toward the headstock end, to avoid pulling the work out of the mandrel. If facing on a mandrel, avoid cutting into the mandrel with the tool bit..

GENERAL LATHE OPERATIONS

LATHE SPEEDS, FEEDS, AND DEPTH OF CUTS

General operations on the lathe include straight and shoulder turning, facing, grooving, parting, turning tapers, and cutting various screw threads. Before these operations can be done, a thorough knowledge of the variable factors of lathe speeds, feeds, and depth of cut must be understood. These factors differ for each lathe operation, and failure to use these factors properly will result in machine failure or work damage. The kind of material being worked, the type of tool bit, the diameter and length of the workpiece, the type of cut desired (roughing or finishing), and the working condition of the lathe will determine which speed, feed, or depth of cut is best for any particular operation. The guidelines which follow for selecting speed, feed, and depth of cut are general in nature and may need to be changed as conditions dictate.

Cutting Speeds.

The cutting speed of a tool bit is defined as the number of feet of workpiece surface, measured at the circumference, that passes the tool bit in one minute. The cutting speed, expressed in FPM, must not be confused with the spindle speed of the lathe which is expressed in RPM. To obtain uniform cutting speed, the lathe spindle must be revolved faster for workplaces of small diameter and slower for workplaces of large diameter. The proper cutting speed for a given job depends upon the hardness of the material being machined, the material of the tool bit, and how much feed and depth of cut is required. Cutting speeds for metal are usually expressed in surface feet per minute, measured on the circumference of the work. Spindle revolutions per minute (RPM) are determined by using the formula:

$$\frac{12 \times SFM}{3.1416 \times D} = \mathbf{RPM}$$

Which is simplified to:

$$\frac{4 \times SFM}{D} = RPM$$

Where **SFM** is the rated surface feet per minute, also expressed as cutting speed.

RPM is the spindle speed in revolutions per minute

D is the diameter of the work in inches.

in order to use the formula simply insert the cutting speed of the metal and the diameter of the workpiece into the formula and you will have the RPM.

Turning a one-half inch piece of aluminum. cutting speed of 200 SFM. would result in the following:

$$\frac{4 \times 200}{1/2} = 1600 \text{ RPM}$$

Table 7-2 in Appendix A lists specific ranges of cutting speeds for turning and threading various materials under normal lathe conditions, using normal feeds and depth of cuts. Note that in Table 7-2 the measurement calculations are in inch and metric measures. The diameter measurements used in these calculations are the actual working diameters that are being machined. and not necessarily the largest diameter of the material. The cutting speeds have a wide range so that the lower end of the cutting speed range can be used for rough cutting and the higher end for finish cutting. If no cutting speed tables are available, remember that, generally. hard materials require a slower cutting speed than soft or ductile materials. Materials that are machined dry. without coolant. require a slower cutting speed than operations using coolant. Lathes that are worn and in poor condition will require slower speeds than machines that are in good shape. If carbide-tipped tool bits are being used, speeds can be increased two to three times the speed used for high-speed tool bits.

Feed

Feed is the term applied to the distance the tool bit advances along the work for each revolution of the lathe spindle. Feed is measured in inches or millimeters per revolution, depending on the lathe used and the operator's system of measurement. Table 7-3 in Appendix A is a guide that can be used to select feed for general roughing and finishing operations. A light feed must be used on slender and small workplaces to avoid damage. If an irregular finish or chatter marks develop while turning. reduce the feed and check the tool bit for alignment and sharpness. Regardless of how the work is held in the lathe, the tool should feed toward the headstock. This results in most of the pressure of the cut being put on the work holding device. If the cut must be fed toward the tailstock. use light feeds and light cuts to avoid pulling the workpiece loose.

Depth of Cut

Depth of cut is the distance that the tool bit moves into the work. usually measured in thousandths of an inch or in millimeters. General machine practice is to use a depth of cut up to five times the rate of feed, such as rough cutting stainless steel using a feed of 0.020 inch per revolution and a depth of cut of 0.100 inch. which would reduce the diameter by 0.200 inch. If chatter marks or machine noise develops. reduce the depth of cut.

MICROMETER COLLAR

Graduated micrometer collars can be used to accurately measure this tool bit movement to and away from the lathe center axis. Thus. the depth of cut can be accurately measured when moving the tool bit on the cross slide by using the cross slide micrometer collar. The compound rest is also equipped with a micrometer collar. These collars can measure in inches or in millimeters, or they can be equipped with a dual readout collar that has both. Some collars measure the exact tool bit movement. while others are designed to measure the amount of material removed from the workpiece (twice the tool bit movement). Consult the operator's instruction manual for specific information on graduated collar use.

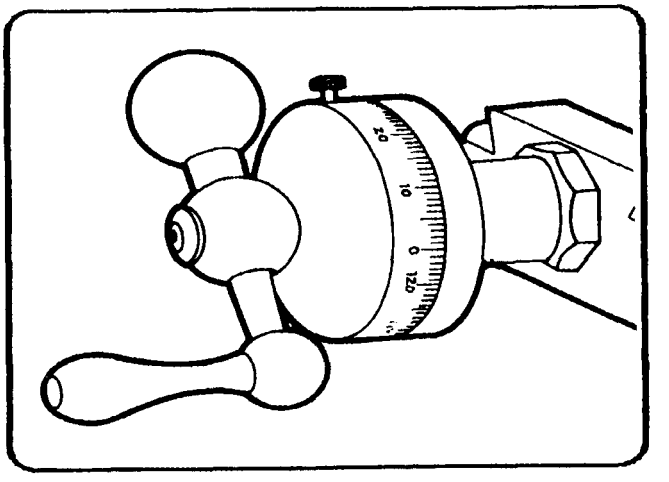

Figure 7-45. Graduated micrometer collar.

FACING

Facing is machining the ends and shoulders of a piece of stock smooth. flat, and perpendicular to the lathe axis. Facing is used to cut work to the desired length and to produce a surface from which accurate measurements may be taken.

Facing Work in a Chuck

Facing is usually performed with the work held in a chuck or collet. Allow the workpicce to extend a distance no more than 1 1/2 times the work diameter from the chuck jaws. and use finishing speeds and feeds calculated using the largest diameter of the workpiece. The tool bit may be fed from the outer edge to the center or from the center to the outer edge. Normal facing is done from the outer edge to the center since this method permits the operator to observe the tool bit and layout line while starting the cut. This method also eliminates the problem of feeding the tool bit into the solid center portion of the workpiece to get a cut started.. Use a left-hand finishing tool bit and a right-hand tool holder when facing from the outer edge toward the center. Work that has a drilled or bored hole in the center may be faced from the center out

to the outer edge if a right-hand finishing tool bit is used. Avoid excessive tool holder and tool bit overhang when setting up the facing operation. Set the tool bit exactly on center to avoid leaving a center nub on the workpiece (Figure 7-46). Use the tailstock center point as a reference point when setting the tool bit exactly on center. If no tailstock center is available, take a trial cut and readjust as needed. If using the cross slide power feed to move the tool bit (into the center), disengage power when the tool bit is within 1/16 inch of the center and finish the facing cut using hand feed.

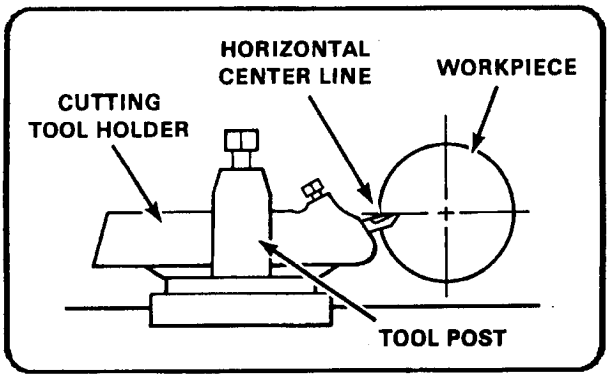

Figure 7-46. Positioning tool bit for facing.

Facing Work Between Centers

Sometimes the workpiece will not fit into a chuck or collet, so facing must be done between centers. To properly accomplish facing between centers, the workpiece must be center-drilled before mounting into the lathe. A half male center (with the tip well lubricated with a white lead and oil mixture) must be used in the lathe tailstock to provide adequate clearance for the tool bit. The tool bit must be ground with a sharp angle to permit facing to the very edge of the center drilled hole (Figure 7-47). Start the facing cut at the edge of the center-drilled hole after checking for tool bit clearance, and feed the cutting tool out to the edge. Use light cuts and finishing feeds, which will reduce the tension put on the half male center. Replace the half male center with a standard center after the facing operation, since the half male center will not provide adequate support for general turning operations. Only a small amount of material can be removed while facing between centers. If too much material is removed, the center-drilled hole will become too small to support the workpiece.

Precision Facing

Special methods must be used to face materials to a precise length. One method is to mount the work in a chuck and lightly face one end with a cleanup cut. Then, reverse the stock and face it to the scribed layout line. This method may not be as accurate as other methods, but it will work for most jobs. A more precise method to face a piece of stock to a specified length is to turn the compound rest to an angle of 30 degrees to the cross slide and then use the graduated micrometer collar to measure tool bit movement, Figure 7-48. At this angle of the compound rest, the movement of the cutting tool will always be half of the reading of the graduated collar. Thus, if the compound rest feed is turned 0.010 inch, the tool bit will face off 0.005 inch of material. With the compound rest angled at 30°, a light cut may be made on the first end, then the piece reversed and faced to accurate length. Always lock the carriage down to the bed. This provides the most secure and accurate base for the cutting tool and helps eliminate unwanted vibration during facing operations. Another way to face to a precise length is to use the lathe carriage micrometer stop to measure the carriage and tool bit movement. Using the micrometer stop can sometimes be faster and easier than using the compound rest graduated collar for measuring tool bit movement.

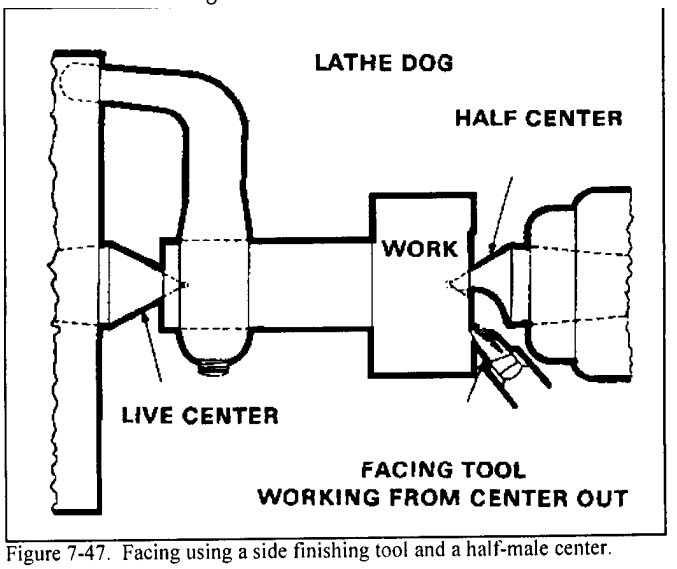

Figure 7-47. Facing using a side finishing tool and a half-male center.

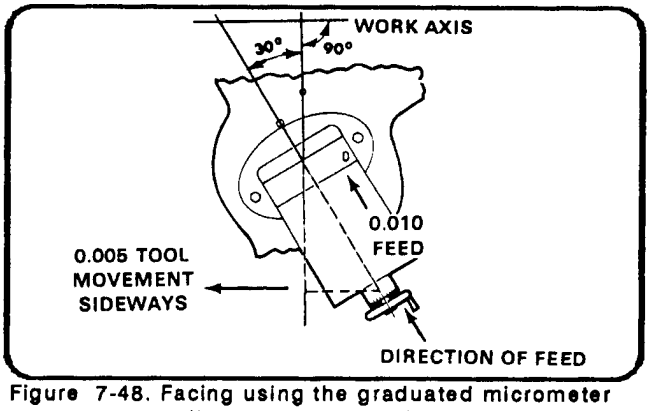

Figure 7-48. Facing using the graduated micrometer collar to measure tool bit movement.

STRAIGHT TURNING

Straight turning, sometimes called cylindrical turning, is the process of reducing the work diameter to a specific dimension as the carriage moves the tool along the work. The work is machined on a plane parallel to its axis so that there is no variation in the work diameter throughout the length of the cut. Straight turning usually consists of a roughing cut followed by a finishing cut. When a large amount of material is to be removed, several roughing cuts may need to be taken. The roughing cut should be as heavy as the machine and tool bit can withstand. The finishing cut should be light and made to cut to the specified dimension in just one pass of the tool bit. When using power feed to machine to a specific length, always disengage the feed approximately 1/16-inch away from the desired length dimension, and then finish the cut using hand feed.

Setting Depth of Cut

In straight turning, the cross feed or compound rest graduated collars are used to determine the depth of cut, which will remove a desired amount from the workpiece diameter. When using the graduated collars for measurement, make all readings when rotating the handles in the forward direction. The lost motion in the gears, called backlash, prevents taking accurate readings when the feed is reversed. If the feed screw must be reversed, such as to restart a cut, then the backlash must be taken up by turning the feed screw handle in the opposite direction until the movement of the screw actuates the movement of the cross slide or compound rest. Then turn the feed screw handle in the original or desired direction back to the required setting.

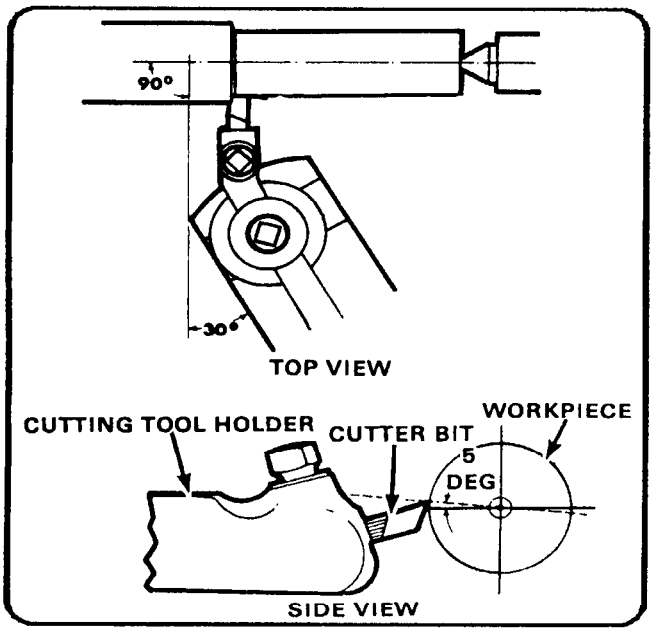

Figure 7-49. Set up for straight turning.

Setting Tool Bit for Straight Turning

See Figure 7-49. For most straight turning operations, the compound rest should be aligned at an angle perpendicular to the cross slide, and then swung 30° to the right and clamped in position. The tool post should be set on the left-hand side of the compound rest T-slot, with a minimum of tool bit and tool holder overhang.

When the compound rest and tool post are in these positions, the danger of running the cutting tool into the chuck or damaging the cross slide are minimized. Position the roughing tool bit about 5° above center height for the best cutting action. This is approximately 3/64-inch above center for each inch of the workpiece diameter. The finishing tool bit should be positioned at center height since there is less torque during finishing. The position of the tool bit to the work should be set so that if anything occurs during the cutting process to change the tool bit alignment, the tool bit will not dig into the work, but instead will move away from the work. Also, by setting the tool bit in this position, chatter will be reduced. Use a right-hand turning tool bit with a slight round radius on the nose for straight turning. Always feed the tool bit toward the headstock unless turning up to an inside shoulder. Different workplaces can be mounted in a chuck, in a collet, or between centers. Which work holding device to use will depend on the size of the work and the particular operation that needs to be performed.

Turning Work Between Centers

Turning work that is held between centers is one accurate method that is available. The chief advantage of using this method is that the work can be removed from the lathe and later replaced for subsequent machining operations without disturbing the trueness of the turned surface in relation to the center holes of the workpiece. The lathe centers must be in good condition and carefully aligned if the turning operation is to be accurate. If necessary, true the centers and realign as needed. After the workpiece is center-drilled, place a lathe dog (that is slightly larger in diameter than the workpiece) on the end of the work that will be toward the headstock, and tighten the lathe dog bolt securely to the workpiece). If using a dead center in the tailstock, lubricate the center with a mixture of white lead and motor oil. A ball bearing live center is best for the tailstock center since this center would not need lubrication and can properly support the work. Extend the tailstock spindle out about 3 inches and loosen the tailstock clamp-down nut. Place the work with the lathe dog end on the headstock live center and slide the tailstock forward until the tailstock center will support the work; then, secure the tailstock with the clamp-down nut. Adjust the tail

of the lathe dog in the drive plate slot, making sure that the tail does not bind into the slot and force the work out of the center. A good fit for the lathe dog is when there is clearance at the top and bottom of the drive plate slot on both sides of the lathe dog tail. Tension should be applied to hold the work in place, but not so much tension that the tail of the lathe dog will not move freely in the drive -plate slot.

Check tool bit clearance by moving the tool bit to the furthest position that can be cut without running into the lathe dog or the drive plate. Set the lathe carriage stop or micrometer carriage stop at this point to reference for the end of the cut and to protect the lathe components from damage. Set the speed, feed, and depth of cut for a roughing cut and then rough cut to within 0.020 inch of the final dimension. Perform a finish cut, flip the piece over, and change the lathe dog to the opposite end. Then rough and finish cut the second side to final dimensions.

Turning Work in Chucks

Some work can be machined more efficiently by using chucks, collets, mandrels, or faceplates to hold the work. Rough and finish turning using these devices is basically the same as for turning between centers. The workpiece should not extend too far from the work holding device without adequate support. If the work extends more than three times the diameter of the workpiece from the chuck or collet, additional support must be used such as a steady rest or a tailstock center support. When turning using a mandrel or faceplate to hold an odd-shaped workpiece, use light cuts and always feed the cutting tool toward the headstock. Every job may require a different setup and a different level of skill. Through experience, each machine operator will learn the best methods for holding work to be turned.

MACHINING SHOULDERS, CORNERS, UNDERCUTS, GROOVES, AND PARTING

Shoulders

Frequently, it will be necessary to machine work that has two or more diameters in its length. The abrupt step, or meeting place, of the two diameters is called a shoulder. The workpiece may be mounted in a chuck, collet, or mandrel, or between centers as in straight turning. Shoulders are turned, or formed, to various shapes to suit the requirements of a particular part. Shoulders are machined to add strength for parts that are to be fitted together, make a corner, or improve the appearance of a part. The three common shoulders are the square, the filleted, and the angular shoulder (Figure 7-50).

Square shoulders are used on work that is not subject to excessive strain at the corners. This shape provides a flat clamping surface and permits parts to be fitted squarely together. There are many different ways to accurately machine a square shoulder. One method is to use a parting tool bit to locate and cut to depth the position of the shoulder. Straight-turning the diameter down to the desired size is then the same as normal straight turning. Another method to machine a square shoulder is to rough out the shoulder slightly oversize with a round-nosed tool bit, and then finish square the shoulders to size with a side-finishing tool bit. Both of these methods are fine for most work, but may be too time-consuming for precise jobs. Shoulders can be machined quickly and accurately by using one type of tool bit that is ground and angled to straight turn and face in one operation (Figure 7-51).

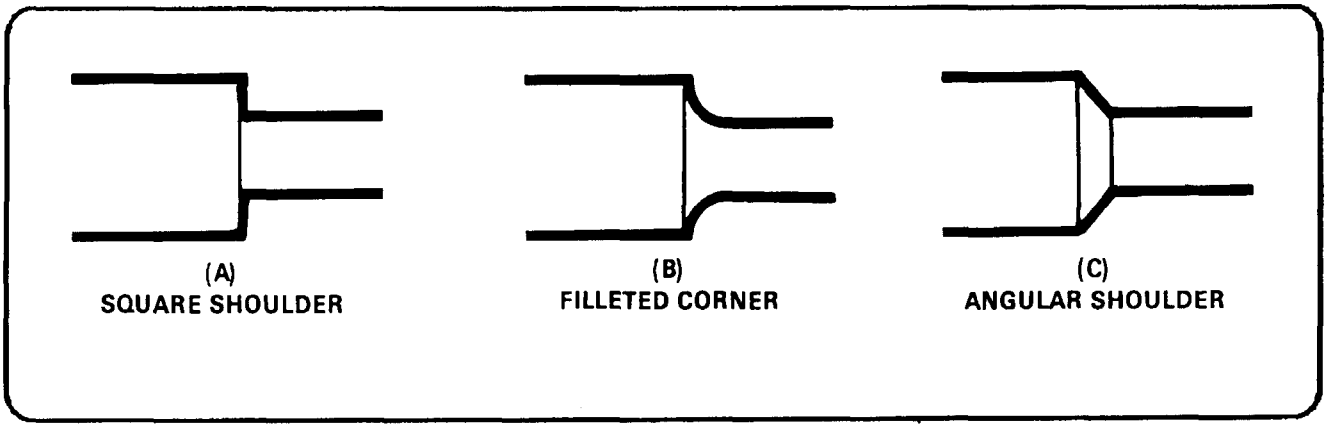

Figure 7-50. Common shoulders.

Set up the micrometer carriage stop to align the shoulder dimension; then, in one pass of the tool bit, feed the tool bit left to turn the smaller diameter until contact is made with the carriage stop. Change the direction to feed out from center and face the shoulder out to the edge of the workpiece. The lathe micrometer stop measures the length of the shoulder and provides for a stop or reference for the tool bit. Shoulder turning in this manner can be accomplished with a few roughing cuts and a finishing cut.

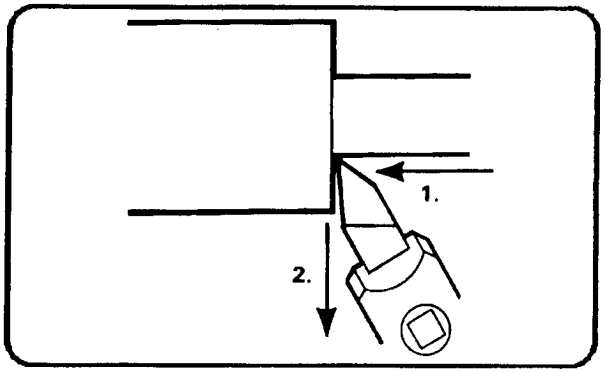

Figure 7-51. Straight and shoulder turning in one pass.

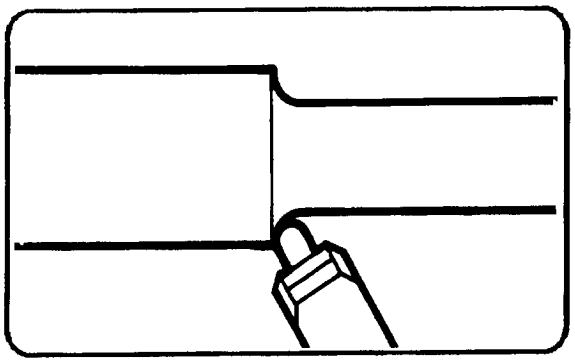

Figurfe 7-52. Cutting a filleted corner.

Filleted Shoulders

Filleted shoulders or comers, are rounded to be used on parts which require additional strength at the shoulder. These shoulders are machined with a round-nose tool bit or a specially formed tool bit (Figure 7-52). This type of shoulder can be turned and formed in the same manner as square shoulders. Filleted corners are commonly cut to double-sided shoulders (see Undercuts).

Angular Shoulders

Angular shoulders although not as common as filleted shoulders, are sometimes used to give additional strength to corners, to eliminate sharp corners, and to add to the appearance of the work. Angular shoulders do not have all the strength of filleted corners but are more economical to produce due to the simpler cutting tools. These shoulders are turned in the same manner as square shoulders by using a side turning tool set at the desired angle of the shoulder, or with a square-nosed tool set straight into the work (Figure 7-53).

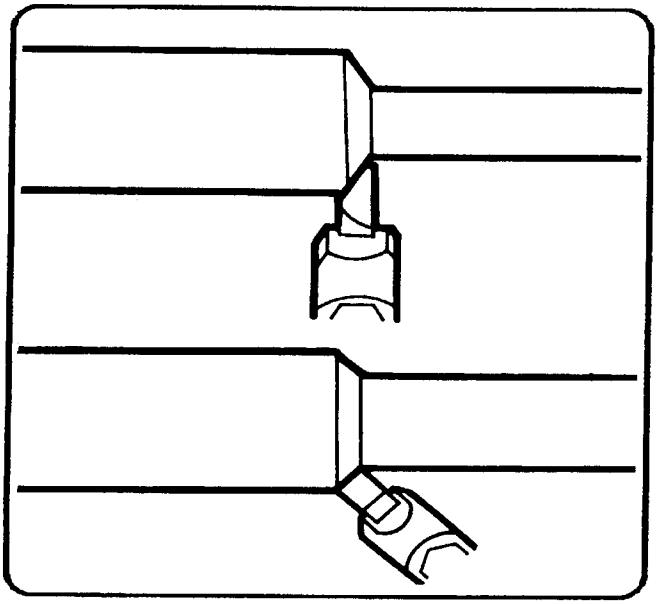

Figure 7-53. Cutting angular shoulders using two tool

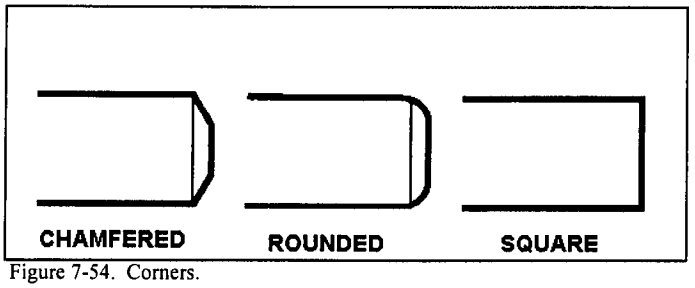

Figure 7-54. Corners.

Corners

Corners are turned on the edges of work to break down sharp edges and to add to the general appearance of the work. Common types of corners are chamfered, rounded, and square (Figure 7-54). Chamfered (or angular) corners may be turned with the side of a turning tool or the end of a square tool bit, as in angular shoulder turning. Round corners are produced by turning a small radius on the ends of the work. The radius may be formed by hand manipulation of the cross slide and carriage using a turning tool. An easier method is to use a tool bit specifically ground for the shape of the desired corner. Still another method is to file the radius with a standard file. A square corner is simply what is left when making a shoulder, and no machining is needed.

Undercuts

Undercuts are the reductions in diameter machined onto the center portion of workplaces (Figure 7-55) to lighten the piece or to reduce an area of the part for special reasons, such as holding an oil seal ring. Some tools, such as drills and reamers, require a reduction in diameter at the ends of the flutes to provide clearance or runout for a milling cutter or grinding wheel. Reducing the diameter of a shaft or workpiece at the center with filleted shoulders at each end may be accomplished by the use of a round-nosed turning tool bit. This tool bit may or may not have a side rake angle, depending on how much machining needs to be done. A tool bit without any side rake is best when machining in either direction. Undercutting is done by feeding the tool bit into the workpiece while moving the carriage back and forth slightly. This prevents gouging and chatter occurring on the work surface.

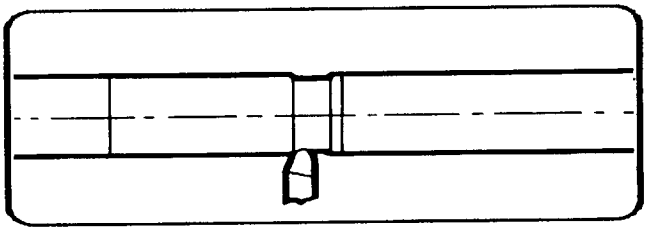

Figure 7-55. Machining an undercut.

Grooves

Grooving (or necking) is the process of turning a groove or furrow on a cylinder, shaft, or workpiece. The shape of the tool and the depth to which it is fed into the work govern the shape and size of the groove. The types of grooves most commonly used are square, round, and V-shaped (Figure 7-56). Square and round grooves are frequently cut on work to provide a space for tool runout during subsequent machining operations, such as threading or knurling. These grooves also provide a clearance for assembly of different parts. The V-shaped groove is used extensively on step pulleys made to fit a V-type belt. The grooving tool is a type of forming tool. It is ground without side or back rake angles and set to the work at center height with a minimum of overhang. The side and end relief angles are generally somewhat less than for turning tools.

In order to cut a round groove of a definite radius on a cylindrical surface, the tool bit must be ground to fit the proper radius gage (Figure 7-57). Small V-grooves may be machined by using a form tool ground to size or just slightly undersize. Large V-grooves may be machined with the compound rest by finishing each side separately at the desired angle. This method reduces tool bit and work contact area, thus reducing chatter, gouging, and tearing. Since the cutting surface of the tool bit is generally broad, the cutting speed must be slower than that used for general turning. A good guide is to use half of the speed recommended for normal turning. The depth of the groove, or the diameter of the undercut, may be checked by using outside calipers or by using two wires and an outside micrometer (Figure 7-58).

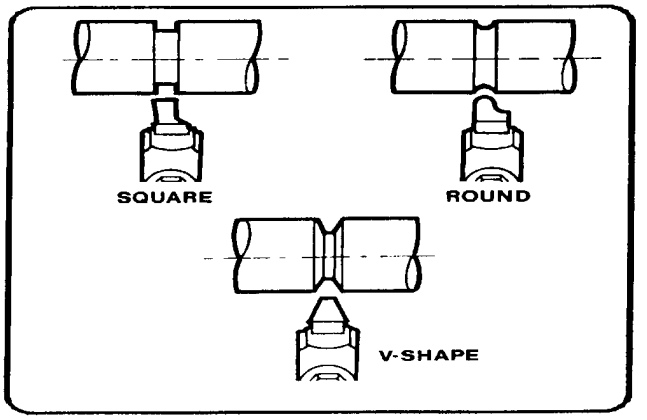

Figure 7-56. Common grooves.

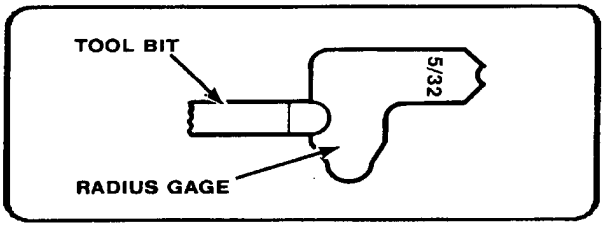

Figure 7-57. Checking tool bit with a radius gage.

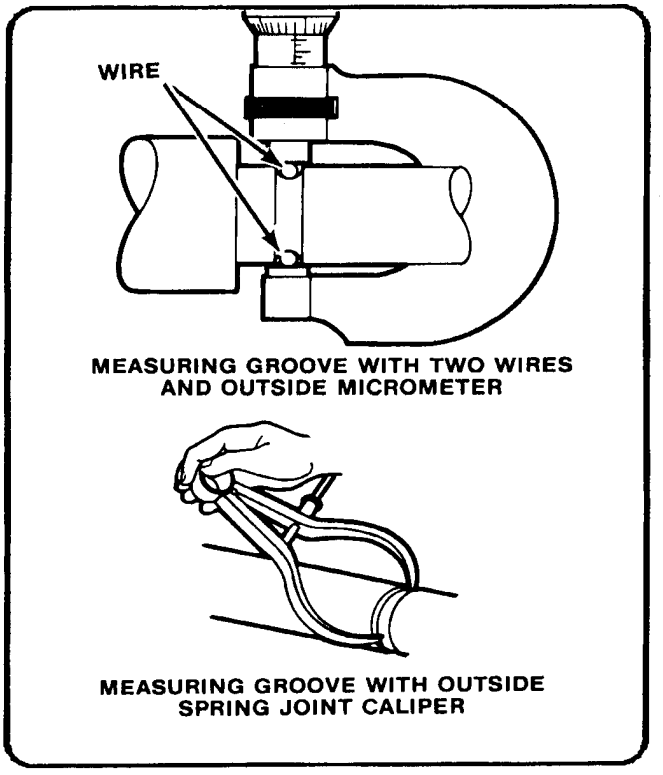

Figure 7-58. Checking the depth of a groove.

When a micrometer and two wires are used. the micrometer reading is equal to the measured diameter of the groove plus two wire diameters.

To calculate measurement over the wires, use the following formula:

Measurement = Outside Diameter+ (2 x wires) – 2 x radius).

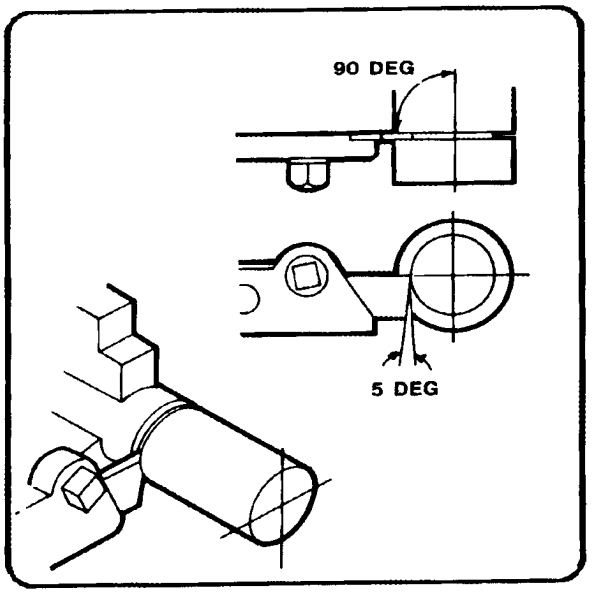

Figure 7-59. Parting.

Parting

Parting is the process of cutting off a piece of stock while it is being held in the lathe. This process uses a specially shaped tool bit with a cutting edge similar to that of a square-nosed tool bit. When parting. be sure to use plenty of coolant, such as a sulfurized cutting oil (machine cast iron dry). Parting tools normally have a 5° side rake and no back rake angles. The blades are sharpened by grinding the ends only. Parting is used to cut off stock. such as tubing. that is impractical to saw off with a power hacksaw.

Parting is also used to cut off work after other machining operations have been completed (Figure 7-59). Parting tools can be of the forged type. inserted blade type. or ground from a standard tool blank. In order for the tool to have maximum strength, the length of the cutting portion of the blade should extend only enough to be slightly longer than half of the workpiece diameter (able to reach the center of the work). Never attempt to part while the work is mounted between centers,

Work that is to be parted should be held rigidly in a chuck or collet, with the area to be parted as close to the holding device as possible. Always make the parting cut at a right angle to the centerline of the work. Feed the tool bit into the revolving work with the cross slide until the tool completely severs the work. Speeds for parting should be about half that used for straight turning. Feeds should be light but continuous. If chatter occurs. decrease the feed and speed. and check for loose lathe parts or a loose setup. The parting tool should be positioned at center height unless cutting a piece that is over 1-inch thick. Thick pieces should have the cutting tool just slightly above center to account for the stronger torque involved in parting. The length of the portion to be cut off can be measured by using the micrometer carriage stop or by using layout lines scribed on the workpiece. Always have the carriage locked down to the bed to reduce vibration and chatter. Never try to catch the cutoff part in the hand; it will be hot and could burn.

RADII AND FORM TURNING

Occasionally, a radius or irregular shape must be machined on the lathe. Form turning is the process of machining radii and these irregular shapes. The method used to form-turn will depend on the size and shape of the object. the accuracy desired. the time allowed. and the number of pieces that need to be formed. Of the several ways to form-turn. using a form turning tool that is ground to the shape of the desired radius is the most common. Other common methods are using hand

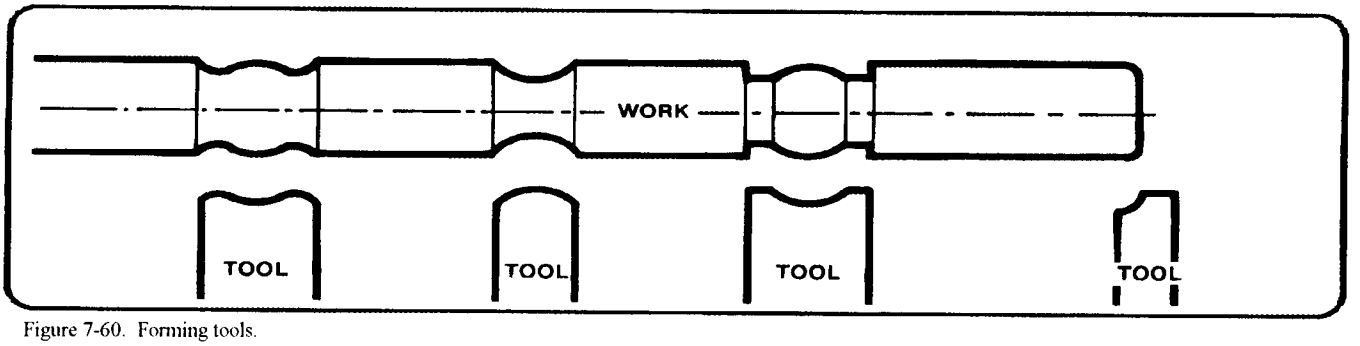

Figure 7-60. Forming tools.

manipulation and filing, using a template and following rod, or using the compound rest and tool to pivot and cut. Two radii are cut in form turning, concave and convex. A concave radius curves inward and a convex radius curves outward.

Forming a Radius Using a Form Turning Tool

Using a form turning tool to cut a radius is a way to form small radii and contours that will fit the shape of the tool. Forming tools can be ground to any desired shape or contour (Figure 7-60), with the only requirements being that the proper relief and rake angles must be ground into the tool's shape. The most practical use of the ground forming tool is in machining several duplicate pieces, since the machining of one or two pieces will not warrant the time spent on grinding the form tool. Use the proper radius gage to check for correct fit. A forming tool has a lot of contact with the work surface, which can result in vibration and chatter. Slow the speed, increase the feed, and tighten the work setup if these problems occur.

Forming a Radius Using Hand Manipulation

Hand manipulation, or free hand, is the most difficult method of form turning to master. The cutting tool moves on an irregular path as the carriage and cross slide are simultaneously manipulated by hand. The desired form is achieved by watching the tool as it cuts and making small adjustments in the movement of the carriage and cross slide. Normally, the right hand works the cross feed movement while the left hand works the carriage movement. The accuracy of the radius depends on the skill of the operator. After the approximate radius is formed, the workpiece is filed and polished to a finished dimension.

Forming a Radius Using a Template

To use a template with a follower rod to form a radius, a full scale form of the work is laid out and cut from thin sheet metal. This form is then attached to the cross slide in such a way that the cutting tool will follow the template. The accuracy of the template will determine the accuracy of the workpiece. Each lathe model has a cross slide and carriage that are slightly different from one another, but they all operate in basically the same way. A mounting bracket must be fabricated to hold the template to allow the cutting tool to follow its shape. This mounting bracket can be utilized for several different operations, but should be sturdy enough for holding clamps and templates. The mounting bracket must be positioned on the carriage to allow for a follower (that is attached to the cross slide) to contact the template and guide the cutting tool. For this operation, the cross slide must be disconnected from the cross feed screw and hand pressure applied to hold the cross slide against the follower and template. Rough-cut the form to the approximate shape before disconnecting the cross feed screw. This way, a finish cut is all that is required while applying hand pressure to the cross slide. Some filing may be needed to completely finish the work to dimension.

Forming a Radius Using the Compound Rest

To use the compound rest and tool to pivot and cut (Figure 7-6 1), the compound rest bolts must be loosened to allow the compound rest to swivel. When using this method, the compound rest and tool are swung from side to side in an arc. The desired radius is formed by feeding the tool in or out with the compound slide. The pivot point is the center swivel point of the compound rest. A concave radius can be turned by positioning the tool in front of the pivot point, while a convex radius can be turned by placing the tool behind the pivot point. Use the micrometer carriage stop to measure precision depths of different radii.

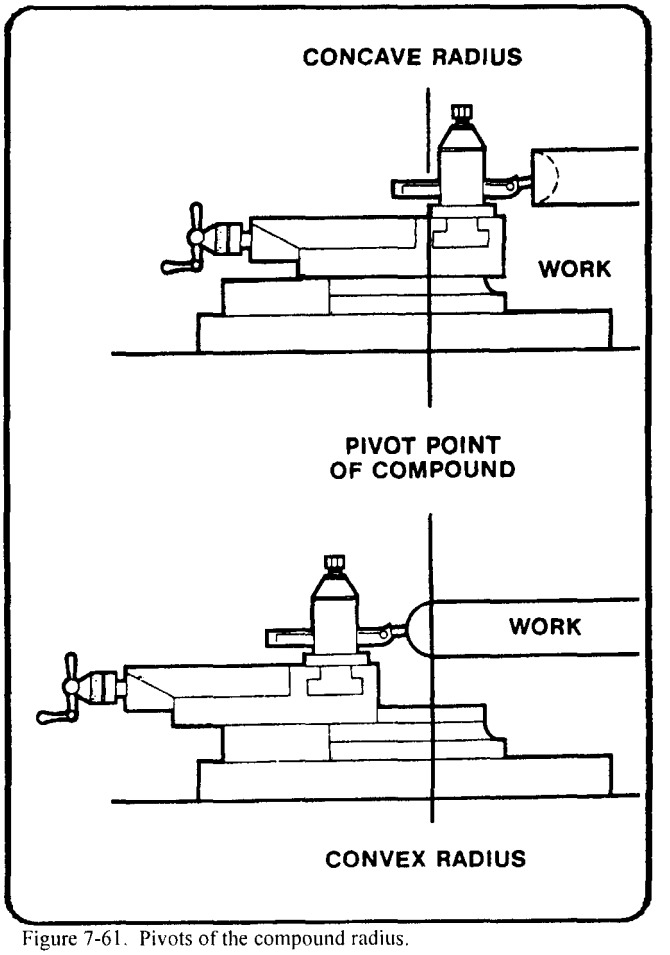

Figure 7-61. Pivots of the compound radius.

TAPER TURNING

When the diameter of a piece changes uniformly from one end to the other, the piece is said to be tapered. Taper turning as a machining operation is the gradual reduction in diameter from one part of a cylindrical workpiece to another part, Tapers can be either external or internal. If a workpiece is tapered on the outside, it has an external taper; if it is tapered on the inside, it has an internal taper. There are three basic methods of turning tapers with a lathe. Depending on the degree, length, location of the taper (internal or external), and the number of pieces to be done, the operator will either use the compound rest, offset the tailstock, or use the taper attachment. With any of these methods the cutting edge of the tool bit must be set exactly on center with the axis of the workpiece or the work will not be truly conical and the rate of taper will vary with each cut.

Compound Rests

The compound rest is favorable for turning or boring short, steep tapers, but it can also be used for longer, gradual tapers providing the length of taper does not exceed the distance the compound rest will move upon its slide. This method can be used with a high degree of accuracy, but is somewhat limited due to lack of automatic feed and the length of taper being restricted to the movement of the slide.

The compound rest base is graduated in degrees and can be set at the required angle for taper turning or boring. With this method, it is necessary to know the included angle of the taper to be machined. The angle of the taper with the centerline is one-half the included angle and will be the angle the compound rest is set for. For example, to true up a lathe center which has an included angle of 60°, the compound rest would be set at 30° from parallel to the ways (Figure 7-41).

If there is no degree of angle given for a particular job, then calculate the compound rest setting by finding the taper per inch, and then calculating the tangent of the angle (which is the: compound rest setting) .

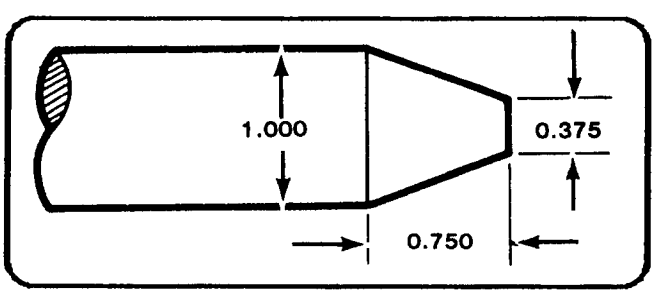

Figure 7-62. Taper problem.

For example, the compound rest setting for the workpiece shown in Figure 7-62 would be calculated in the following manner

$$\text{TPI} = \frac{D - d}{L} \qquad \text{angle} = \text{TAN}\ \frac{(\text{TPI})}{2}$$

Where TPI = taper per inch

D = large diameter,

d = small diameter,

L = length of taper

angle = compound rest setting

The problem is actually worked out by substituting numerical values for the letter variables:

$$\text{TPI} = \frac{1.000 - 0.375}{0.750}$$

$$\text{TPI} = \frac{0.625}{0.750}$$

$$\text{TPI} = 0.833$$

Apply the formula to find the angle by substituting the numerical values for the letter variables:

$$\text{angle} = \text{TAN}\ \frac{(0.833)}{2}$$

$$\text{angle} = \text{TAN}\ 0.41650$$

Using the trig charts in TC 9-515 or any other source of trig charts, the TAN of 0.41650 is found to be 22°37'. This angle is referred to as 22 degrees and 37 minutes.

To machine the taper shown in Figure 7-62, the compound rest will be set at 22°37 '. Since the base of the compound rest is not calibrated in minutes, the operator will set the base to an approximate degree reading, make trial cuts, take measurements, and readjust as necessary to obtain the desired angle of taper. The included angle of the workpiece is double that of the tangent of angle (compound rest setting). In this case, the double of 22°37' would equal the included angle of 45°14'.

To machine a taper by this method, the tool bit is set on center with the workpiece axis. Turn the compound rest feed handle in a counterclockwise direction to move the compound rest near its rear limit of travel to assure sufficient traverse to complete the taper. Bring the tool bit into position with the workpiece by traversing and cross-feeding the carriage. Lock the carriage to the lathe bed when the tool bit is in position. Cut from right to left, adjusting the depth of cut by moving the cross feed handle and reading the calibrated collar located on the cross feed handle. feed the tool bit by hand-turning the compound rest feed handle in a clockwise direction.

Offsetting the Tailstock

The oldest and probably most used method of taper turning is the offset tailstock method. The tailstock is made in two pieces: the lower piece is fitted to the bed, while the upper part can be adjusted laterally to a given offset by use of adjusting screws and lineup marks (Figure 7-63).

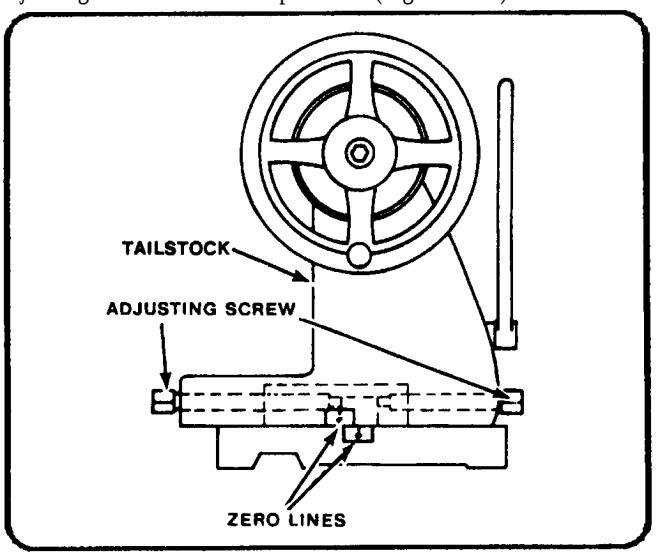

Figure 7-63. Tailstock offset for taper turning.

Since the workpiece is mounted between centers, this method of taper turning can only be used for external tapers. The length of the taper is from headstock center to tailstock center, which allows for longer tapers than can be machined using the compound rest or taper attachment methods.

The tool bit travels along a line which is parallel with the ways of the lathe. When the lathe centers are aligned and the workpiece is machined between these centers, the diameter will remain constant from one end of the piece to the other. If the tailstock is offset, as shown in Figure 7-64, the centerline of the workpiece is no longer parallel with the ways; however, the tool bit continues its parallel movement with the ways, resulting in a tapered workpiece. The tail stock may be offset either toward or away from the operator. When the offset is toward the operator, the small end of the workpiece will be at the tailstock with the diameter increasing toward the headstock end.

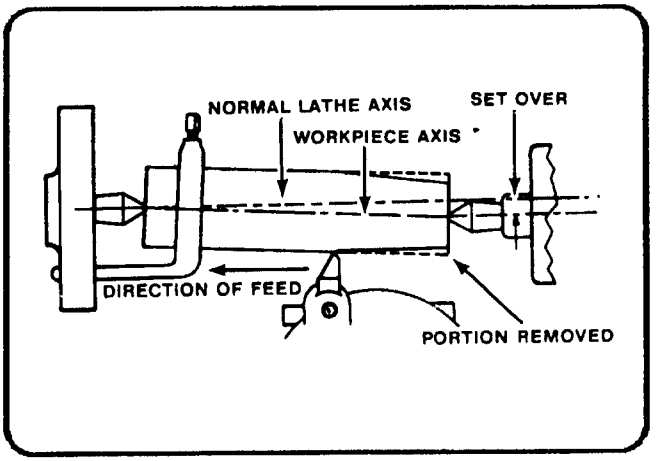

Figure 7-64. Taper turning with tailstock set over.

The offset tailstock method is applicable only to comparatively gradual tapers because the lathe centers, being out of alignment, do not have full bearing on the workpiece. Center holes are likely to wear out of their true positions if the lathe centers are offset too far, causing poor results and possible damage to centers.

The most difficult operation in taper turning by the offset tailstock method is determining the proper distance the tailstock should be moved over to obtain a given taper. Two factors affect the amount the tailstock is offset: the taper desired and the length of the workpiece. If the offset remains constant, workplaces of different lengths, or with different depth center holes, will be machined with different tapers (Figure 7-65).

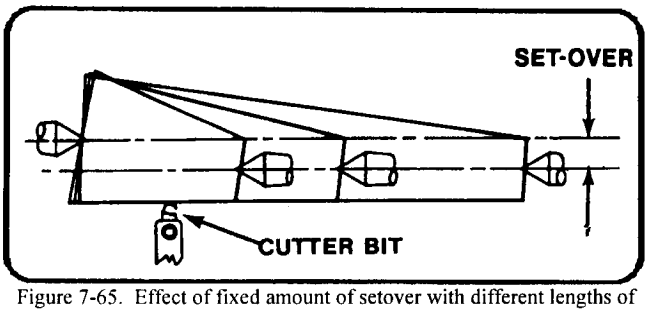

Figure 7-65. Effect of fixed amount of setover with different lengths of workpieces.

The formula for calculating the tailstock offset when the taper is given in taper inches per foot (tpf) is as follows

$$\text{Offset} = \frac{\text{TPF x L}}{24}$$

Where: Offset = tailstock offset (in inches)
TPF = taper (in inches per foot)
L = length of taper (in feet) measured along the axis of the workpiece

For example, the amount of offset required to machine a bar 42 inches (3.5 feet) long with a taper of 1/2 inch per foot is calculated as follows:

$$\text{OFFSET} = \frac{\text{TPF x L}}{24}$$

$$\text{OFFSET} = \frac{1/2 \text{ X } 42}{24}$$

$$\text{OFFSET} = \frac{0.5 \text{ x } 42}{24}$$

$$\text{OFFSET} = \frac{21}{24}$$

OFFSET = 0.875 inch.

Therefore, the tailstock should be offset 0.875 inch to machine the required taper. The formula for calculating the tailstock offset when the taper is given in TPF is as follows:

$$\text{OFFSET} = \frac{\text{TPI X L}}{2}$$

Where **OFFSET** = tailstock offset
TPI = taper per inch
L = length of taper in inches

For example, the amount of offset required to machine a bar 42 inches long with a taper of 0.0416 TPI is calculated as follows:

$$\text{OFFSET} = \frac{\text{TPI X L}}{2}$$

$$\text{OFFSET} = \frac{0.0416 \text{ x } 42}{2}$$

$$\text{OFFSET} = \frac{1.7472}{2} \text{ or rounded up } \frac{1.75}{2}$$

OFFSET = .875 inch

Therefore, the tailstock should be offset 0.875 inch to machine the required taper.

If the workpiece has a short taper in any par of it's length and the **TPI** or **TPF** is not given. use the following formula:

$$\text{OFFSET} = \frac{\text{L X (D-d)}}{\text{2 X L1}}$$

Where :

D = Diameter of large end
d = Diameter of small end
L = Total length of workpiece in inches diameter (in inches)
L1 = Length of taper

For example, the amount of tailstock offset required to machine a bar 36 inches (3 feet) in length for a distance of 18 inches (1.5 feet) when the large diameter is 1 3/4 (1 .750) inches and the small diameter is 1 1/2 (1.5) inches is calculated as follows

$$\text{OFFSET} = \frac{\text{L X (D-d)-}}{\text{2XL1}}$$

$$\text{OFFSET} = \frac{36 \text{ X } (1.750 - 1.5)}{36}$$

$$\text{OFFSET} = \frac{36 \text{ X } 0.25}{36}$$

OFFSET = 9/36

OFFSET = 0.25 inch

Therefore, the tailstock would be offset (toward the operator) 0.25 inch to machine the required taper.

Metric tapers can also be calculated for taper turning by using the offset tailstock method. Metric tapers are expressed as a ratio of 1 mm per unit of length. Figure 7-66 shows how the work would taper 1 mm in a distance of 20 mm. This taper would then be given as a ratio of 1:20 and would be annotated on small diameter (d) will be 1 mm greater (d +). Refer to the following formula for calculating the dimensions of a metric taper. If the small diameter (d), the unit length of taper (k), and the total length of taper (1) are known, then the large diameter (D) may be calculated. The large diameter (D) will be equal to the small diameter plus the amount of taper. The amount of taper for the unit length (k) is (d + 1) - (d). Therefore, the amount of taper per millimeter of unit length = (l/k). The total amount of taper will be the taper per millimeter (l/k) multiplied by the total length of taper (l).

$$\text{Total Taper} = \frac{1 \times 1}{k} \text{ or } \frac{1}{k}$$

$$D = d + \text{total amount of taper}$$

For example, to calculate for the large diameter D for a 1:30

$$D = \frac{d}{k} + \frac{1}{k}$$

taper having a small diameter of 10 mm and a length of 60 mm, do the following:

Since the taper is the ratio 1:30, then (k)= 30, since 30 is the unit of length.

$$D = \frac{d + 1}{k}$$

$$D = \frac{10 + 60}{30}$$

$$D = 10 + 2$$

$$D = 12 \text{ mm}$$

Tailstock offset is calculated as follows:

$$\text{Tailstock offset} = \frac{D - d}{2 \times 1} \times L$$

D = large diameter
d = small diameter
I = length of taper
L = length of the workpiece

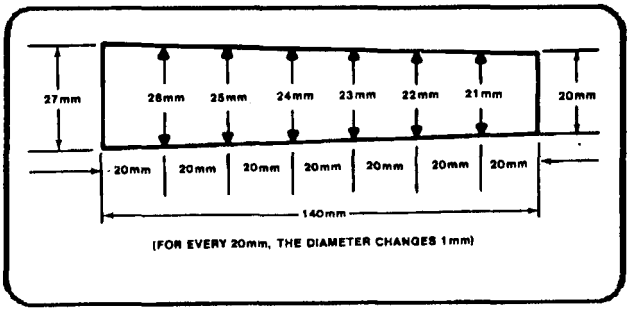

Figure 7-66. Metric taper, 1:200mm.

Thus, to determine the tailstock offset in millimeters for the taper in Figure 7-67, substitute the numbers and solve for the offset. Calculate the tailstock offset required to turn a 1:50 taper 200 mm long on a workpiece 800 mm long. The small diameter of the tapered section is 49 mm.

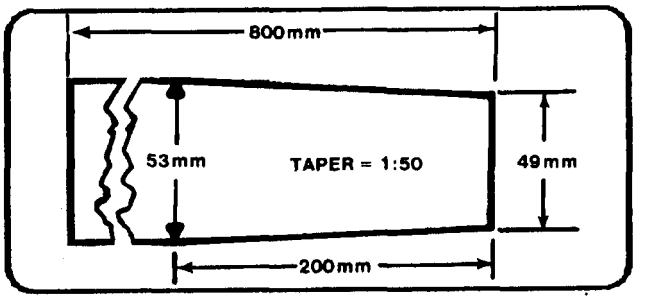

Figure 7-67. Metric taper problem.

$$D = d + \frac{1}{k}$$

$$D = 49 + \frac{200}{50}$$

$$D = 49 + 4 \text{ or } D = 53$$

The tailstock would be moved toward the operator 8 mm.

$$(to) = \frac{53 - 49}{2 \times 200} \times 800$$

$$(to) \quad \frac{4}{400} = \times 800$$

$$(to) = 0.01 \times 800 \text{ or } 8 \text{ mm}$$

Another important consideration in calculating offset is the distance the lathe centers enter the workpiece. The length of the workpiece (L) should be considered as the distance between the points of the centers for all offset computations.

Therefore, if the centers enter the workpiece 1/8 inch on each end and the length of the workpiece is 18 inches, subtract 1/4 inch from 18 inches and compute the tailstock offset using 17 3/4 inches as the workpiece length (L).

The amount of taper to be cut will govern the distance the top of the tailstock is offset from the centerline of the lathe. The tailstock is adjusted by loosening the clamp nuts, shifting the upper half of the tailstock with the adjusting screws, and then tightening them in place.

There are several methods the operator may use to measure the distance the tailstock has been offset depending upon the accuracy desired (Figure 7-68).

One method is to gage the distance the lineup marks on the rear of the tailstock have moved out of alignment. This can be done by using a 6-inch rule placed near the lineup marks or by transferring the distance between the marks to the rule's surface using a pair of dividers.

Another common method uses a rule to check the amount of offset when the tailstock is brought close to the headstock.

Where accuracy is required, the amount of offset may be measured by means of the graduated collar on the cross feed screw. First compute the amount of offset; next, set the tool holder in the tool post so the butt end of the holder faces the tailstock spindle. Using the cross feed, run the tool holder in by hand until the butt end touches the tailstock spindle. The pressure should be just enough to hold a slip of paper placed between the tool holder and the spindle. Next, move the cross slide to bring the tool holder toward you to remove the backlash. The reading on the cross feed micrometer collar may be recorded, or the graduated collar on the cross feed screw may be set at zero. Using either the recorded reading or the zero setting for a starting point, bring the cross slide toward you the distance computed by the offset. Loosen and offset the tailstock until the slip of paper drags when pulled between the tool holder and the spindle. Clamp the tailstock to the lathe bed.

Another and possibly the most precise method of measuring the offset is to use a dial indicator. The indicator is set on the center of the tailstock spindle while the centers are still aligned. A slight loading of the indicator is advised since the first 0.010 or 0.020 inches of movement of the indicator may be inaccurate due to mechanism wear causing fluctuating readings. Load the dial indicators follows: Set the bezel to zero and move tailstock towards the operator the calculated Famount. Then clamp the tailstock to the way.

Whichever method is used to offset the tailstock, the offset must still be checked before starting to cut. Set the dial indicator in the tool post with its spindle just barely touching far right side of the workpiece. Then, rotate the carriage toward the headstock exactly I inch and take the reading from the dial indicator. One inch is easily accomplished using the thread chasing dial. It is 1 inch from one number to another.

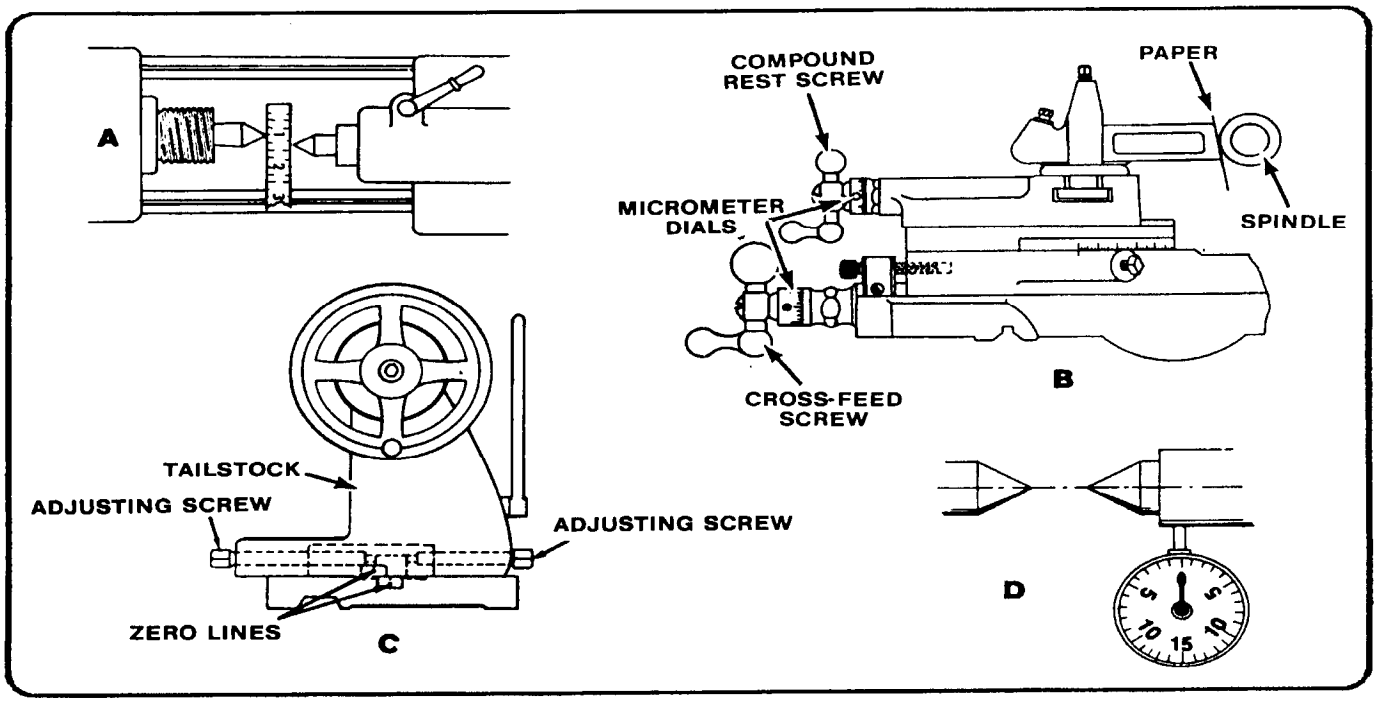

Figure 7-68. Measuring tailstock offset.

Alternatively, 1 inch can be drawn out on the workpiece. The dial indicator will indicate the taper for that 1 inch and, if needed, the tailstock can be adjusted as needed to the precise taper desired. If this method of checking the taper is not used, then an extensive trial and error method is necessary.

To cut the taper, start the rough turning at the end which will be the small diameter and feed longitudinally toward the large end (Figure 7-64). The tailstock is offset toward the operator and the feed will be from right to left. The tool bit, a right-hand turning tool bit or a round-nose turning tool bit, will have its cutting edge set exactly on the horizontal centerline of the workpiece, not above center as with straight turning

Taper Attachment

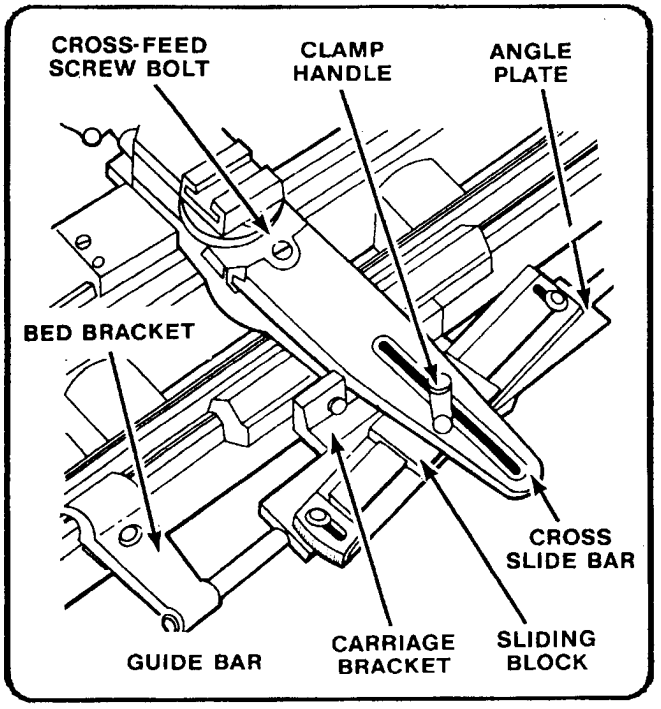

Figure 7-69. Taper attachment.

The taper attachment (Figure 7-69) has many features of special value, among which are the following:

- The lathe centers remain in alignment and the center holes in the work are not distorted.
- The alignment of the lathe need not be disturbed, thus saving considerable time and effort.
- Taper boring can be accomplished as easily as taper turning.
- A much wider range is possible than by the offset method. For example, to machine a 3/4-inch-per-foot taper on the end of a bar 4 feet long would require an offset of 1 1/2 inches, which is beyond the capabilities of a regular lathe but can be accomplished by use of the taper attachment.

Some engine lathes are equipped with a taper attachment as standard equipment and most lathe manufacturers have a taper attachment available. Taper turning with a taper attachment, although generally limited to a taper of 3 inches per foot and to a set length of 12 to 24 inches, affords the most accurate means for turning or boring tapers. The taper can be set directly on the taper attachment in inches per foot; on some attachments, the taper can be set in degrees as well.

Ordinarily, when the lathe centers are in line, the work is turned straight, because as the carriage feeds along, the tool is always the same distance from the centerline. The purpose of the taper attachment is to make it possible to keep the lathe centers in line, but by freeing the cross slide and then guiding it (and the tool bit) gradually away from the centerline, a taper can be cut or, by guiding it gradually nearer the centerline (Figure 7-70), a taper hole can be bored.

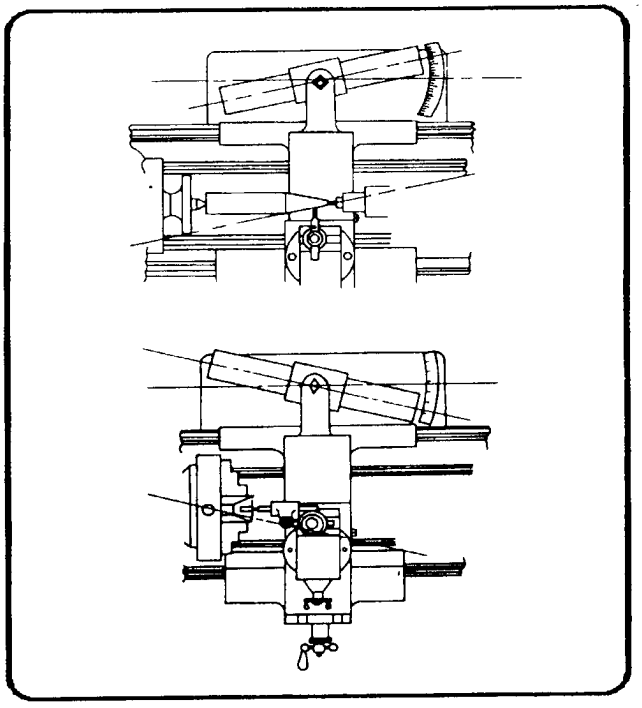

Figure 7-70. Taper turning and boring.

A plain taper attachment for the lathe is illustrated in Figure 7-69. A bed bracket attaches to the lathe bed and keeps the angle plate from moving to the left or the right. The carriage bracket moves along the underside of the angle plate in a dovetail and keeps the angle plate from moving in or out on the bed bracket. The taper to be cut is set by placing the guide bar, which clamps to the angle plate, at an angle to the ways of the lathe bed. Graduations on one or both ends of the guide bar are used to make this adjustment. A sliding block which rides on a dovetail on the upper surface of the guide bar is secured during the machining operation to the cross slide bar of the carriage, with the cross feed screw of the carriage being disconnected. Therefore, as the carriage is traversed during the feeding operation, the cross slide bar follows the guide bar, moving at the predetermined angle from the ways of the bed to cut the taper. It is not necessary to remove the taper attachment when straight turning is desired. The guide bar can be set parallel to the ways, or the clamp handle can be released permitting the sliding block to move without affecting the cross slide bar, and the cross feed screw can be reengaged to permit power cross feed and control of the cross slide from the apron of the carriage.

Modern lathes use a telescopic taper attachment. This attachment allows for using the cross feed, and set up is a bit faster than using a standard taper attachment. To use the telescopic attachment, first set the tool bit for the required diameter of the work and engage the attachment by tightening the binding screws, the location and number of which depend upon the design of the attachment. The purpose of the binding screws is to bind the cross slide so it may be moved only by turning the cross feed handle, or, when loosened, to free the cross slide for use with the taper attachment. To change back to straight turning with the telescopic attachment, it is necessary only to loosen the binding screws.

When cutting a taper using the taper attachment, the direction of feed should be from the intended small diameter toward the intended large diameter. Cutting in this manner, the depth of cut will decrease as the tool bit passes along the workpiece surface and will assist the operator in preventing possible damage to the tool bit, workpiece, and lathe by forcing too deep a cut.

The length of the taper the guide bar will allow is usually not over 12 to 24 inches, depending on the size of the lathe. It is possible to machine a taper longer than the guide bar allows by moving the attachment after a portion of the desired taper length has been machined; then the remainder of the taper can be cut. However, this operation requires experience.

If a plain standard taper attachment is being used, remove the binding screw in the cross slide and set the compound rest perpendicular to the ways. Use the compound rest graduated collar for depth adjustments.

When using the taper attachment, there may be a certain amount of “lost motion” (backlash) which must be eliminated or serious problems will result. In every slide and every freely revolving screw there is a certain amount of lost motion which is very noticeable if the parts are worn. Care must be taken to remove lost motion before proceeding to cut or the workpiece will be turned or bored straight for a short distance before the taper attachment begins to work. To take up lost motion when turning tapers, run the carriage back toward the dead center as far as possible, then feed forward by hand to the end of the workpiece where the power feed is engaged to finish the cut. This procedure must be repeated for every cut.

The best way to bore a taper with a lathe is to use the taper attachment. Backlash must be removed when tapers are being bored with the taper attachment, otherwise the hole will be bored straight for a distance before the taper starts. Two important factors to consider: the boring tool must be set exactly on center with the workpiece axis, and it must be small enough in size to pass through the hole without rubbing at the small diameter. A violation of either of these factors will result in a poorly formed, inaccurate taper or damage to the tool and workpiece. The clearance of the cutter bit shank and boring tool bar must be determined for the smaller diameter of the taper. Taper boring is accomplished in the same manner as taper turning.

To set up the lathe attachment for turning a taper, the proper TPF must be calculated and the taper attachment set-over must be checked with a dial indicator prior to cutting. Calculate the taper per foot by using the formula:

$$\mathbf{TPF} = \frac{\mathbf{D - d}}{\mathbf{L}} \times 12$$

TPF = taper per foot,

D = large diameter (in inches),

d = small diameter (in inches),

L = length of taper

After the TPF is determined, the approximate angle can be set on the graduated TPF scale of the taper attachment. Use a dial indicator and a test bar to set up for the exact taper. Check the taper in the same manner as cutting the taper by allowing for backlash and moving the dial indicator along the test bar from the tailstock end of the head stock end. Check the TPI by using the thread-chasing dial, or using layout lines of 1-inch size, and multiply by 12 to check the TPF. Make any adjustments needed, set up the work to be tapered, and take a trial cut. After checking the trial cut and making final adjustments, continue to cut the taper to required dimensions as in straight turning. Some lathes are set up in metric measurement instead of inch measurement. The taper attachment has a scale graduated in degrees, and the guide bar can be set over for the angle of the desired taper. If the angle of the taper is not given, use the following formula to determine the amount of the guide bar set over:

$$\text{Guide Bar Set Over (in millimeters)} = \frac{D + d}{2} \times \frac{L}{l}$$

D = large diameter of taper (mm)

d = small diameter of taper (mm)

I = length of taper (mm)

L = length of guide bar (mm)

Reference lines must be marked on the guide bar an equal distance from the center for best results.

A metric dial indicator can be used to measure the guide bar set over, or the values can be changed to inch values and an inch dial indicator used.

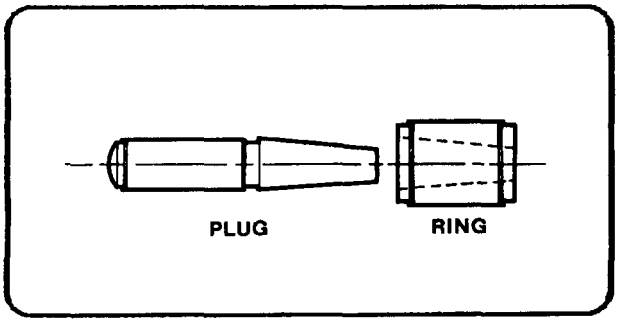

Figure 7-71. Taper gages.

Checking Tapers for Accuracy

Tapers must be checked for uniformity after cutting a trial cut. Lay a good straight edge along the length of the taper and look for any deviation of the angle or surface. Deviation is caused by backlash or a lathe with loose or worn parts. A bored taper may be checked with a plug gage (Figure 7-71) by marking the gage with chalk or Prussian blue pigment. Insert the gage into the taper and turn it one revolution. If the marking on the gage has been rubbed evenly, the angle of taper is correct. The angle of taper must be increased when there is not enough contact at the small end of the plug gage, and it must be decreased when there is not enough contact at the large end of the gage. After the correct taper has been obtained but the gage does not enter the workpiece far enough, additional cuts must be taken to increase the diameter of the bore.

An external taper may be checked with a ring gage (Figure 7-71). This is achieved by the same method as for checking internal tapers, except that the workpiece will be marked with the chalk or Prussian blue pigment rather than the gage. Also, the angle of taper must be decreased when there is not enough contact at the small end of the ring gage and it must be increased when there is not enough contact at the large end of the gage. If no gage is available, the workpiece should be tested in the hole it is to fit. When even contact has been obtained, but the tapered portion does not enter the gage or hole far enough, the diameter of the piece is too large and must be decreased by additional depth of cut

Another good method of checking external tapers is to scribe lines on the workpiece 1 inch apart (Figure 7-72); then, take measurements with an outside micrometer. Subtracting the small reading from the large reading will give the taper per inch.

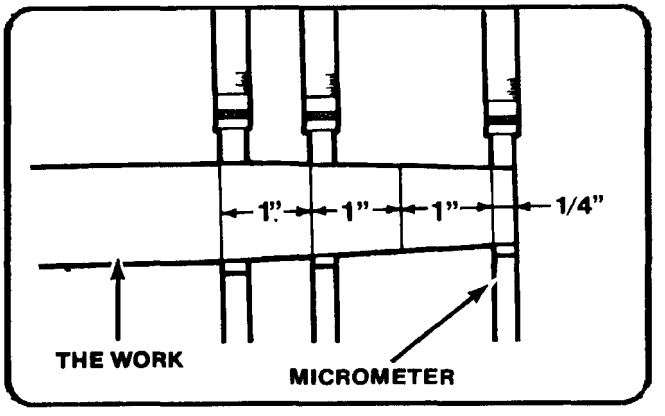

Figure 7-72. Measuring a taper with a micrometer.

Duplicating a Tapered Piece

When the taper on a piece of work is to be duplicated and the original piece is available, it may be placed between centers on the lathe and checked with a dial indicator mounted in the tool post.. When the setting is correct, the dial indicator reading will remain constant when moved along the length of taper.

This same method can be used on workplaces without centers provided one end of the workpiece can be mounted and held securely on center in the headstock of the lathe. For example, a lathe center could be mounted in the lathe spindle by use of the spindle sleeve, or a partially tapered workpiece could be held by the nontapered portion mounted in a collet or a chuck. Using either of these two methods of holding the work, the operator could use only the compound rest or the taper attachment for determining and machining the tapers.

Standard Tapers

There are various standard tapers in commercial use, the most common ones being the Morse tapers, the Brown and Sharpe tapers, the American Standard Machine tapers, the Jarno tapers, and the Standard taper pins.

Morse tapers are used on a variety of tool shanks, and exclusively on the shanks of twist drills. The taper for different numbers of Morse tapers is slightly different, but is approximately 5/8 inch per foot in most cases. Dimensions for Morse tapers are given in Table 7-4 in Appendix A.

Brown and Sharpe tapers are used for taper shanks on tools such as end mills and reamers. The taper is approximately ½ inch per foot for all sizes except for taper No 10, where the taper is 0.5161 inch per foot.

The American Standard machine tapers are composed of a self-holding series and a steep taper series. The self-holding taper series consists of 22 sizes which are given in Table 7-5 in Appendix A. The name "self-holding" has been applied where the angle of the taper is only 2° or 3° and the shank of the tool is so firmly seated in its socket that there is considerable frictional resistance to any force tending to. turn or rotate the tool in the holder. The self-holding tapers are composed of selected tapers from the Morse, the Brown and Sharpe, and the ¾-inch-per foot machine taper series. The smaller sizes of self-holding tapered shanks are provided with a tang to drive the cutting tool. Larger sizes employ a tang drive with the shank held by a key, or a key drive with the shank held with a draw bolt. The steep machine tapers consist of a preferred series and an intermediate series as given in Table 7-6 in Appendix A. A steep taper is defined as a taper having an angle large enough to ensure the easy or self-releasing feature. Steep tapers have a 3 ½-inch taper per foot and are used mainly for aligning milling machine arbors and spindles, and on some lathe spindles and their accessories.

The Jarno taper is based on such simple formulas that practically no calculations are required when the number of taper is known. The taper per foot of all Jarno tapers is 0.600 inch per foot. The diameter at the large end is as many eighths, the diameter at the small end is as many tenths, and the length as many half-inches as indicated by the number of the taper. For example: A No 7 Jarno taper is 7/8 inch in diameter at the large end; 7/10 or 0.7 inch in diameter at the small end; and 7/2, or 3 1/2 inches long. Therefore, formulas for these dimensions would read:

$$\text{Diameter at small end} = \frac{\text{No. of timer}}{8}$$

$$\text{Diameter at small end} = \frac{\text{No. of taper}}{10}$$

$$\text{Length of taper} = \frac{\text{No. of taper}}{2}$$

The Jarno taper is used on various machine tools, especially profiling machines and die-sinking machines. It has also been used for the headstock and tailstock spindles on some lathes.

The Standard taper pins are used for positioning and holding parts together and have a ¼-inch taper per foot. Standard sizes in these pins range from No 7/0 to No 10 and are given in Table 7-7 in Appendix A. The tapered holes used in conjunction with the tapered pins utilize the processes of step-drilling and taper reaming.

To preserve the accuracy and efficiency of tapers (shanks and holes), they must be kept free from dirt, chips, nicks, or burrs. The most important thing in regard to tapers is to keep them clean. The next most important thing is to remove all oil by wiping the tapered surfaces with a soft, dry cloth before use, because an oily taper will not hold.

SCREW THREAD CUTTING

Screw threads are cut with the lathe for accuracy and for versatility. Both inch and metric screw threads can be cut using the lathe. A thread is a uniform helical groove cut inside of a cylindrical workpiece, or on the outside of a tube or shaft. Cutting threads by using the lathe requires a

thorough knowledge of the different principles of threads and procedures of cutting. Hand coordination, lathe mechanisms, and cutting tool angles are all interrelated during the thread cutting process. Before attempting to cut threads on the lathe a machine operator must have a thorough knowledge of the principles, terminology and uses of threads.

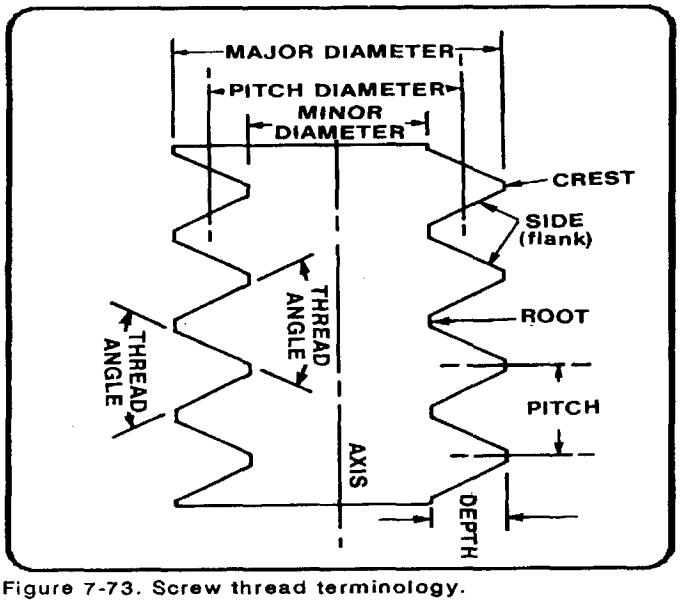

Figure 7-73. Screw thread terminology.

Screw Thread Terminology

The common terms and definitions below are used in screw thread work and will be used in discussing threads and thread cutting.

- External or male thread is a thread on the outside of a cylinder or cone.
- Internal or female thread is a thread on the inside of a hollow cylinder or bore.
- Pitch is the distance from a given point on one thread to a similar point on a thread next to it, measured parallel to the axis of the cylinder. The pitch in inches is equal to one divided by the number of threads per inch.
- Lead is the distance a screw thread advances axially in one complete revolution. On a single-thread screw, the lead is equal to the pitch. On a double-thread screw, the lead is equal to twice the pitch, and on a triple-thread screw, the lead is equal to three times the pitch (Figure 7-74).

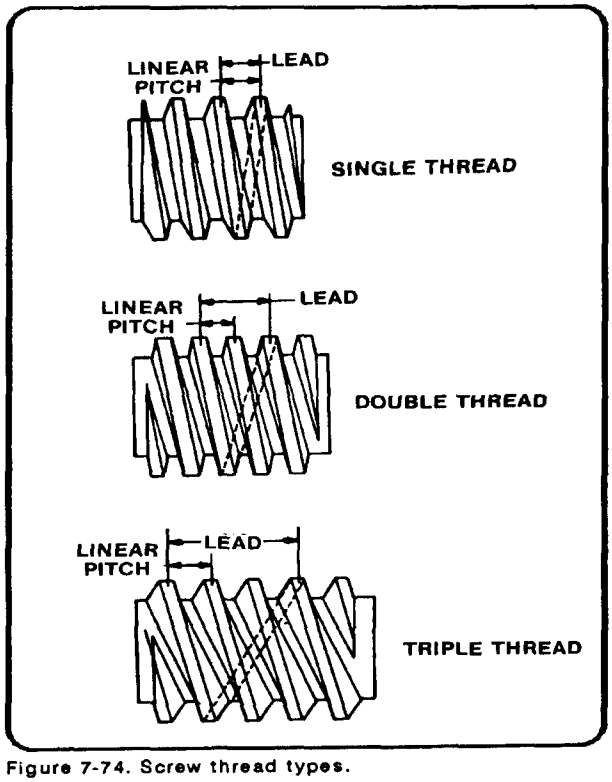

Figure 7-74. Screw thread types.

- Crest (also called "flat") is the top or outer surface of the thread joining the two sides.
- Root is the bottom or inner surface joining the sides of two adjacent threads.
- Side is the surface which connects the crest and the root (also called the flank).
- Angle of the thread is the angle formed by the intersection of the two sides of the threaded groove.
- Depth is the distance between the crest and root of a thread, measured perpendicular to the axis.
- Major diameter is the largest diameter of a screw thread.
- Minor diameter is the smallest diameter of a screw thread.
- Pitch diameter is the diameter of an imaginary cylinder formed where the width of the groove is equal to one-half of the pitch. This is the critical dimension of threading as the fit of the thread is determined by the pitch diameter (Not used for metric threads).

- Threads per inch is the number of threads per inch may be counted by placing a rule against the threaded parts and counting the number of pitches in 1 inch. A second method is to use the screw pitch gage. This method is especially suitable for checking the finer pitches of screw threads.

- A single thread is a thread made by cutting one single groove around a rod or inside a hole. Most hardware made, such as nuts and bolts, has single threads. Double threads have two grooves cut around the cylinder. There can be two, three, or four threads cut around the outside or inside of a cylinder. These types of special threads are sometimes called multiple threads.

- A right-hand thread is a thread in which the bolt or nut must be turned to the right (clockwise) to tighten.

- A left hand thread is a thread in which the bolt or nut must turn to the left (counterclockwise) to tighten.

- Thread fit is the way a bolt and nut fit together as to being too loose or too tight.

- Metric threads are threads that are measured in metric measurement instead of inch measurement.

Screw Thread Forms

The most commonly used screw thread forms are detailed in the following paragraphs. One of the major problems in industry is the lack of a standard form for fastening devices. The screw thread forms that follow attempt to solve this problem; however, there is still more than one standard form being used in each industrial nation. The International Organization for Standardization (IS0) met in 1975 and drew up a standard metric measurement for screw threads, the new IS0 Metric thread Standard (previously known as the Optimum Metric Fastener System). Other thread forms are still in general use today, including the American (National) screw thread form, the square thread, the Acme thread, the Brown and Sharpe 29° worm screw thread, the British Standard Whitworth thread, the Unified thread, and different pipe threads. All of these threads can be cut by using the lathe.

- The IS0 Metric thread standard is a simple thread system that has threaded sizes ranging in diameter from 1.6 mm to 100 mm (see Table 7-8 in Appendix A). These metric threads are identified by the capital M, the nominal diameter, and the pitch. For example, a metric thread with an outside diameter of 5 mm and a pitch of 0.8 mm would be given as M 5 x 0.8. The IS0 metric thread standard simplifies thread design, provides for good strong threads, and requires a smaller inventory of screw fasteners than used by other thread forms. This IS0 Metric thread has a 60° included angle and a crest that is 1.25 times the pitch (which is similar to the National thread form). The depth of thread is 0.6134 times the pitch, and the flat on the root of the thread is wider than the crest. The root of the ISO Metric thread is 0.250 times the pitch (Table 7-9).

- The American (National) screw thread form is divided into four series, the National Coarse (NC), National Fine (NF), National Special (NS), and National Pipe threads (NPT), 11 series of this thread form have the same shape and proportions. This thread has a 60° included angle. The root and crest are 0.125 times the pitch. This thread form is widely used in industrial applications for fabrication and easy assembly and construction of machine parts. Table 7-9 in Appendix A gives the different values for this thread form.

- The British Standard Whitworth thread form thread has a 55° thread form in the V-shape. It has rounded crests and roots.

- The Unified thread form is now used instead of the American (National) thread form. It was designed for interchangeability between manufacturing units in the United States, Canada, and Great Britain. This thread is a combination of the American (National) screw thread form and the British Whitworth screw thread forms. The thread has a 60° angle with a rounded root, while the crest can be rounded or flat. (In the United States, a flat crest is preferred.) The internal thread of the unified form is like the American (National) thread form but is not cut as deep, leaving a crest of one-fourth the pitch instead of one-eighth the pitch. The coarse thread series of the unified system is designated UNC, while the fine thread series is designated UNF. (See Tble 7-9 in Appendix A for thread form and values.

- The American National 29° Acme was designed to replace the standard square thread, which is difficult to machine using normal taps and machine dies. This thread is a power transmitting type of thread for use in jacks, vises, and feed screws. Table 7-9 lists the values for Acme threads.

The Brown and Sharpe 29° worm screw thread uses a 29° angle, similar to the Acme thread. The depth is greater and the widths of the crest and root are different (Table 7-9 in Appendix A). This is a special thread used to mesh with worm gears and to transmit motion between two shafts at right angles to each other that are on separate planes. This thread has a self-locking feature making it useful for winches and steering mechanisms.

- The square screw thread is a power transmitting thread that is being replaced by the Acme thread. Some vises and lead screws may still be equipped with square threads. Contact areas between the threads are small, causing screws to resist wedging, and friction between the parts is minimal (Table 7-9 in Appendix A).

- The spark plug thread (international metric thread type) is a special thread used extensively in Europe, but seen only on some spark plugs in the United States. It has an included angle of 60° with a crest and root that are 0.125 times the depth.

- Different types of pipe thread forms are in use that have generally the same characteristics but different fits. Consult the Machinery's Handbook or a similar reference for this type of thread.

THREAD FIT AND CLASSIFICATIONS

The Unified and American (National) thread forms designate classifications for fit to ensure that mated threaded parts fit to the tolerances specified. The unified screw thread form specifies several classes of threads which are Classes 1A, 2A, and 3A for screws or external threaded parts, and 1B, 2B, and 3B for nuts or internal threaded parts. Classes 1 A and 1 B are for a loose fit where quick assembly and rapid production are important and shake or play is not objectionable. Classes 2A and 2B provide a small amount of play to prevent galling and seizure in assembly and use. and sufficient clearance for some plating. Classes 2A and 2B are recommended for standard practice in making commercial screws. bolts. and nuts. Classes 3A and 3B have no allowance and 75 percent of the tolerance of Classes 2A and 2B A screw and nut in this class may vary from a fit having no play to one with a small amount of play. Only high grade products are held to Class 3 specifications.

Four distinct classes of screw thread fits between mating threads (as between bolt and nut) have been designated for the American (National) screw thread form. Fit is defined as "the relation between two mating parts with reference to ease of assembly. " These four fits are produced by the application of tolerances which are listed in the standards.

The four fits are described as follows:

- Class 1 fit is recommended only for screw thread work where clearance between mating parts is essential for rapid assembly and where shake or play is not objectionable.

- Class 2 fit represents a high quality of thread product and is recommended for the great bulk of interchangeable screw thread work.

- Class 3 fit represents an exceptionally high quality of commercially threaded product and is recommended only in cases where the high cost of precision tools and continual checking are warranted.

- Class 4 fit is intended to meet very unusual requirements more exacting than those for which Class 3 is intended. It is a selective fit if initial assembly by hand is required. It is not. as yet. adaptable to quantity production.

Thread Designations

In general. screw thread designations give the screw number (or diameter) first. then the thread per inch. Next is the thread series containing the initial letter of the series. NC (National Coarse). UNF (Unified Fine). NS (National Special). and so forth. followed by the class of fit. If a thread is left-hand. the letters LH follow the fit. An example of designations is as follows:

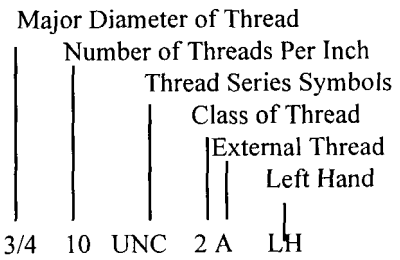

Two samples and explanations of thread designations are as follows:

- No 12 (0.216) -24 NC-3. This is a number 12 (0.216-inch diameter) thread. 24 National Coarse threads per inch. and Class 3 ways of designating the fit between parts. including tolerance grades. tolerance positions. and tolerance classes. A simpler fit.

- 1/4-28 UNF-2A LH. This is a l/4-inch diameter thread. 28 Unified Fine threads per inch, Class 2A fit, and left-hand thread.

Metric Thread Fit and Tolerance

The older metric screw thread system has over one hundred different thread sizes and several ways of designating the fit between parts. including tolerance grades. tolerance positions. and tolerance classes. A simple system was devised with the latest ISO Metric thread standard that uses one internal fit and two external fit designations to designate the tolerance (class) of fit. The symbol 6H is used to designate the fit for an internal thread (only the one symbol is used). The two symbols 6g and 5g6g are used to designate the fit for an external thread. 6g being used for general purpose threads and Sg6g used to designate a close fit. A fit between a pair of threaded parts is indicated by the internal thread (nut) tolerance fit designation followed by the external thread (bolt) tolerance fit designation with the two separated by a stroke. An example is M 5 x 0.8-Sg6g/6H. where the nominal or major diameter is 5 mm. the pitch is 0.8 mm. and a close tit is intended for the bolt and nut. Additional information on ISO metric threads and specific fits can be found in any updated engineer's handbook or machinist's handbook.

THREAD CUTTING TOOL BITS

Cutting V-threads with a 60 degrees thread angle is the most common thread cutting operation done on a lathe. V-threads. with the 60 degree angle. are used for metric thread cutting and for American (National) threads and Unified threads. To properly cut V-shaped threads. the single point tool bit must be ground for the exact shape of the thread form. to include the root of the thread (Figure 7-75).

For metric and American (National) thread forms. a flat should be ground at the point of the tool bit (Figure 7-76). perpendicular to the center line of the 600 thread angle. See the thread form table for the appropriate thread to determine the width of the Sat. For unified thread forms. the tip of the tool bit should be ground with a radius formed to fit the size of the root of the thread. Internal unified threads have a flat on the tip of the tool bit. In all threads listed above. the tool bit should be ground with enough side relief angle and enough front clearance angle (Figure 7-76). Figure 7-77 illustrates the correct steps involved in grinding a thread-cutting tool bit.

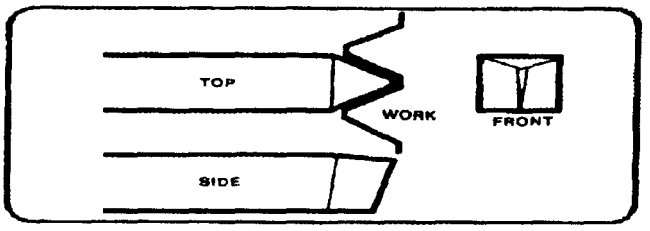

Figure 7-75. V-shaped thread cutter.

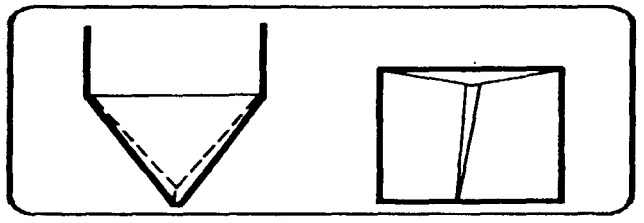

Figure 7-76. Relief angles on a thread cutting tool bit.

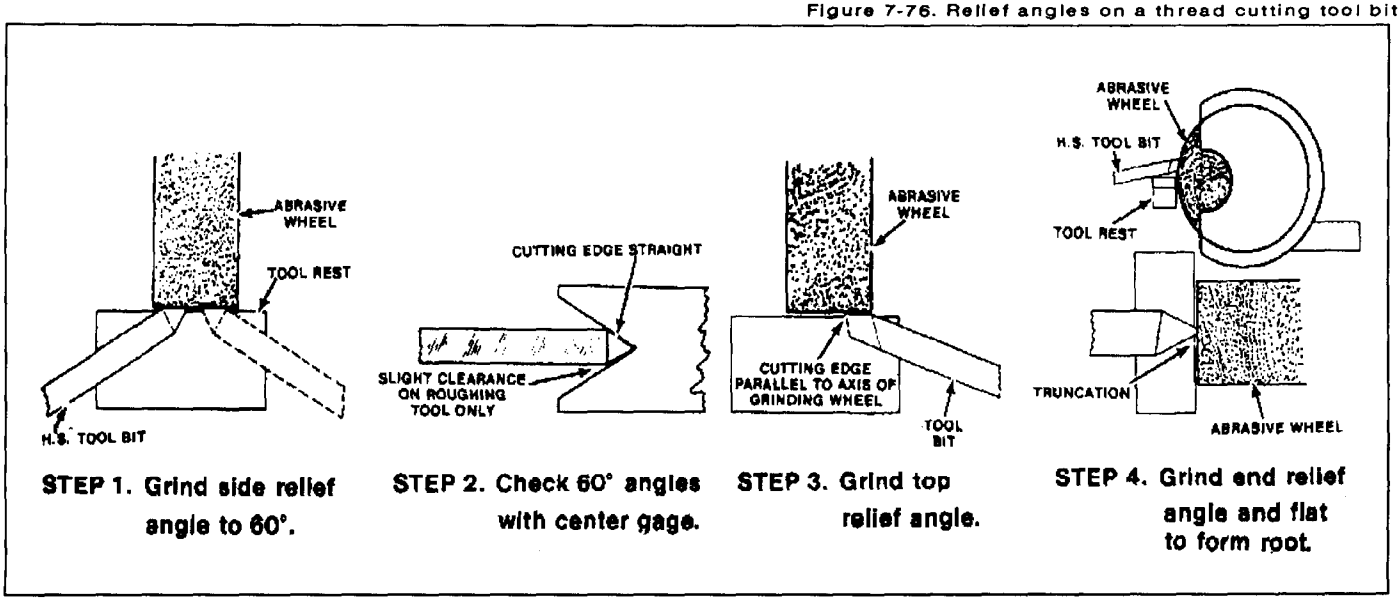

Figure 7-77. Grinding a thread cutting tool bit.

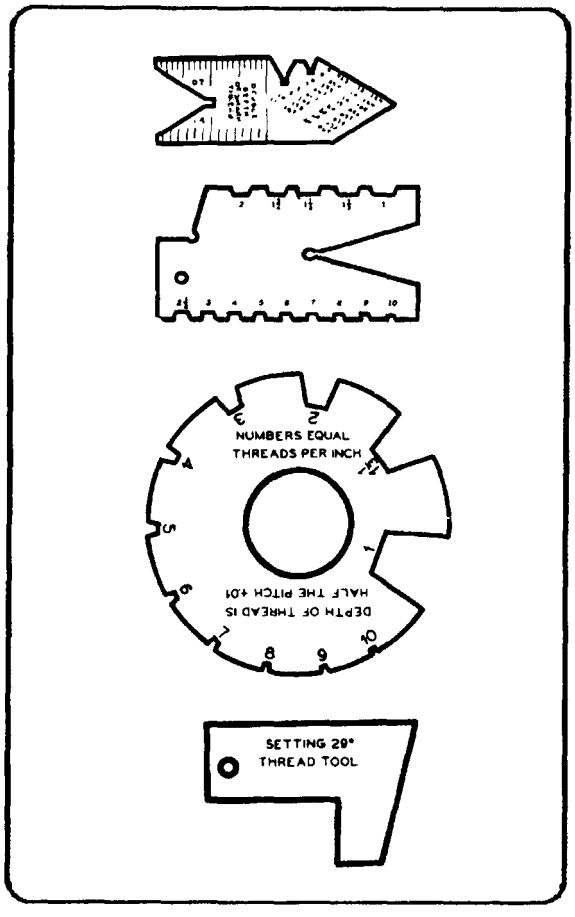

Figure 7-78. Common gages for checking threading tool bits.

For Acme and 29° worm screw threads, the cutter bit must be ground to form a point angle of 29°. Side clearances must be sufficient to prevent rubbing on threads of steep pitch. The end of the bit is then ground to a flat which agrees with the width of the root for the specific pitch being cut. Thread-cutting tool gages (Figure 7-78) are available to simplify the procedure and make computations unnecessary.

To cut square threads, a special thread-cutter bit is required. Before the square thread-cutter bit can be ground, it is necessary to compute the helix angle of the thread to be cut (Figure 7-79). Compute the helix angle by drawing a line equal in length to the thread circumference at its minor diameter (this is accomplished by multiplying the minor diameter by 3.1416 [pi]). Next, draw a line perpendicular to and at one end of the first line, equal in length to the lead of the thread. If the screw is to have a single thread, the lead will be equal to the pitch. Connect the ends of the angle so formed to obtain the helix angle.

The tool bit should be ground to the helix angle. The clearance angles for the sides should be within the helix angle. Note that the sides are also ground in toward the shank to provide additional clearance.

The end of the tool should be ground flat, the flat being equal to one-half the pitch of the thread to produce equal flats and spaces on the threaded part.

When positioning the thread-cutter bit for use, place it exactly on line horizontally with the axis of the workpiece. This is especially important for thread-cutter bits since a slight variation in the vertical position of the bit will change the thread angle being cut.

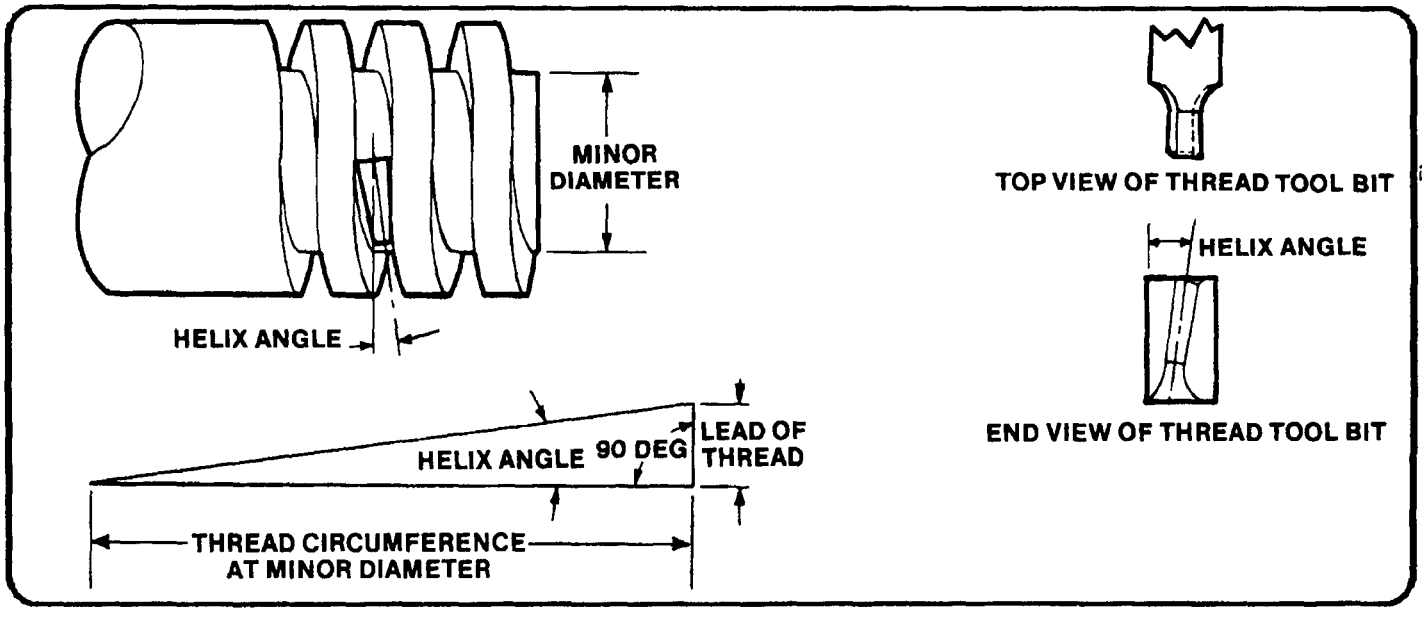

Figure 7-79. Thread tool bit for square threads.

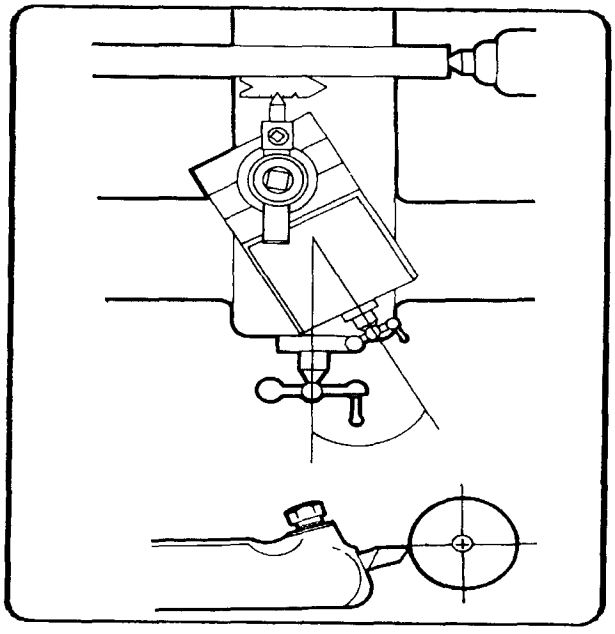

Figure 7-80. Positioning thread cutter bit.

The thread-cutter bit must be positioned so that the centerline of the thread angle ground on the bit is exactly perpendicular to the axis of the workpiece. The easiest way to make this alignment is by use of a center gage. The center gage will permit checking the point angle at the same time as the alignment is being effected. The center gage is placed against the workpiece and the cutter bit is adjusted on the tool post so that its point fits snugly in the 60° angle notch of the center gage (Figure 7-80).

In cutting threads on a lathe, the pitch of the thread or number of threads per inch obtained is determined by the speed ratio of the headstock spindle and the lead screw which drives the carriage. Lathes equipped for thread cutting have gear arrangements for varying the speed of the lead screw. Modern lathes have a quick-change gearbox for varying the lead screw to spindle ratio so that the operator need only follow the instructions on the direction plates of the lathe to set the proper feed to produce the desired number of threads per inch. Once set to a specific number of threads per inch, the spindle speed can be varied depending upon the material being cut and the size of the workpiece without affecting the threads per inch.

The carriage is connected to the lead screw of the lathe for threading operations by engaging the half nut on the carriage apron with the lead screw. A control is available to reverse the direction of the lead screw for left or right-hand threading as desired. Be sure the lead screw turns in the proper direction. Feed the cutter bit from right to left to produce a right-hand thread. Feed the cutter bit from left to right to produce a left-hand thread.

Direction of feed. For cutting standard 60° right-hand threads of the sharp V-type, such as the metric form, the American (National) form, and the Unified form, the tool bit should be moved in at an angle of 29° to the right (Figure 7-8 1), (Set the angle at 29° to the left for left-hand threads). Cutting threads with the compound rest at this angle allows for the left side of the tool bit to do most of the cutting, thus relieving some strain and producing a free curling chip. The direction is controlled by setting the compound rest at the 29° angle before adjusting the cutter bit perpendicular to the workpiece axis. The depth of cut is then controlled by the compound rest feed handle.

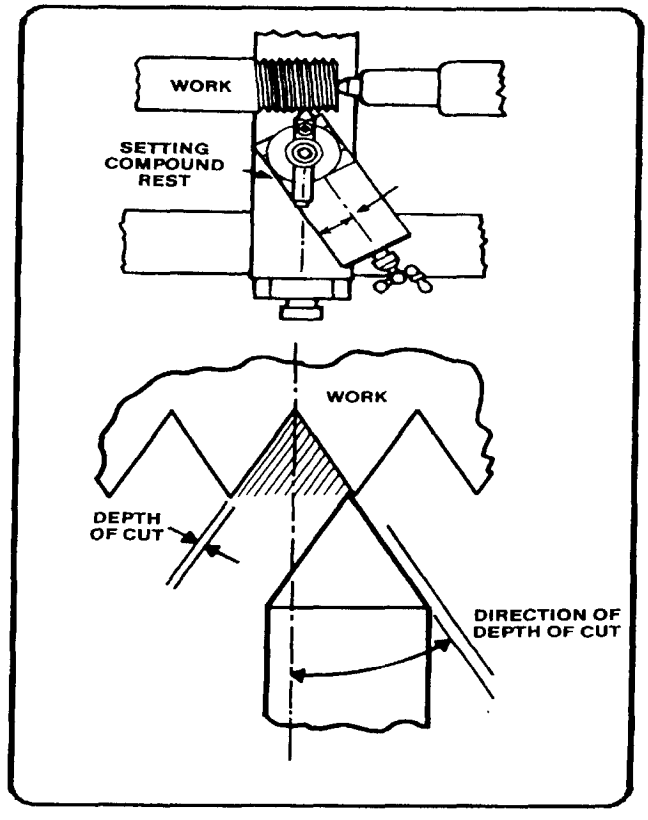

Figure 7-81. External threading setup.

For Acme and 29° worm threads, the compound rest is set at one-half of the included angle (14 1/2°) and is fed in with the compound rest. For square threads, the cutter bit is fed into the workpiece at an angle perpendicular to the workpiece axis.

THREAD CUTTING OPERATIONS

Before cutting threads, turn down the workpiece to the major diameter of the thread to be cut and chamfer the end. Engineering and machinist's handbooks have special tables listing the recommended major and minor diameters for all

thread forms. These tables list a minimum and a maximum major diameter for the external threads, and a minimum and maximum minor diameter for internal threads. Table 7-10 in Appendix A lists the most common screw thread sizes. The difference between the maximum and minimum major diameters varies with different sizes of threads. Coarse threads have a larger difference between the two than fine threads. It is common practice, when machining threads on the lathe, to turn the outside diameter down to the maximum major diameter instead of the minimum major diameter, thus allowing for any error.

The workpiece may be set up in a chuck, in a collet, or between centers. If a long thread is to be cut, a steady rest or other support must be used to help decrease the chance of bending the workpiece. Lathe speed is set for the recommended threading speed (Table 7-2 in Appendix A).

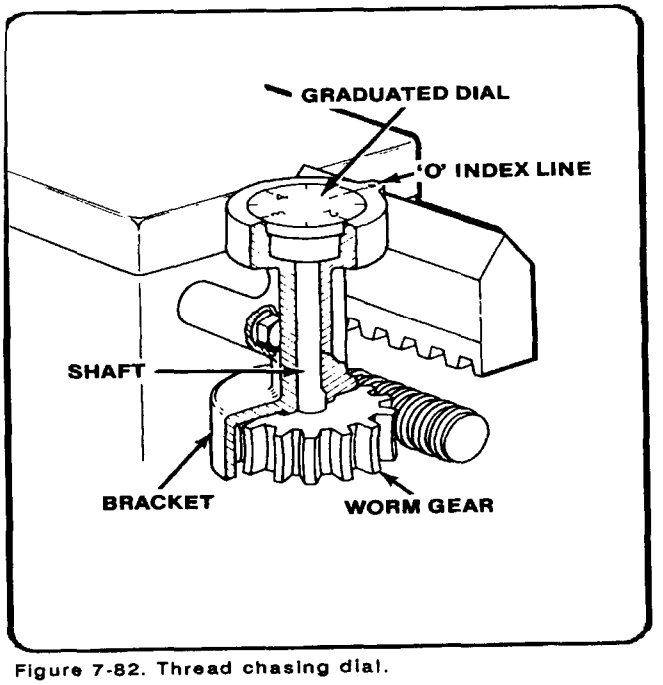

Figure 7-82. Thread chasing dial.

To cut threads, move the threading tool bit into contact with the work and zero the compound rest dial. The threading tool bit must be set at the right end of the work; then, move the tool bit in the first depth of cut by using the graduated collar of the compound rest. Position the carriage half nut lever to engage the half nut to the lead screw in order to start the threading operation. The first cut should be a scratch cut of no more than 0.003 inch so the pitch can be checked. Engaging the half nut with the lead screw causes the carriage to move as the lead screw revolves. Cut the thread by making a series of cuts in which the threading tool follows the original groove for each cut. Use the thread chasing dial, Figure 7-82, to determine when to engage the half nut so that the threading tool will track properly. The dial is attached to the carriage and is driven by means of the lead screw. Follow the directions of the thread chasing dial, Figure 7-83, to determine when to engage the half nut lever.

After making the first pass check for proper pitch of threads by using one of the three methods in Figure 7-84. After each pass of the threading tool bit, the operator must move the threading tool bit out of the threaded groove by backing out the compound rest handle, taking note of the setting. Traverse the carriage back to the start of the thread and move the compound rest dial back to the original setting plus the new depth of cut. At the end of each cut, the half nut lever is usually disengaged and the carriage returned by hand. (The cross slide dial can also be used to move the tool bit in and out, depending on the preference of the operator.)

After cutting the first depth of thread, check for the proper pitch of threads by using one of the three methods in Figure 7-84. If the thread pitch is correct as set in the quick-change gearbox, continue to cut the thread to the required depth. This is determined by measuring the pitch diameter and checking the reference table for-the proper pitch diameter limits for the desired tit.

Some lathes are equipped with a thread chasing stop bolted to the carriage which can be set to regulate the depth of cut for each traverse of the cutter bit or can be set to regulate the total depth of cut of the thread.

When the thread is cut the end must be finished in some way. The most common means of finishing the end is with a specially ground or 45 degree angle chanifer cutting bit. To produce a rounded end, a cutter bit with the desired shape should be specially ground for that purpose.

Metric Thread Cutting Operations

Metric threads, are cut one of two ways by using the lathe, designed and equipped for metric measurement or by using a standard inch lathe and converting its operation to cut metric threads. A metric measurement lathe has a quick-change gear box used to set the proper screw pitch in millimeters. An inch- designed lathe must be converted to cut metric threads by switching gears in the lathe headstock according to the directions supplied with each lathe.

Most lathes come equipped with a set of changeable gears for cutting different, or nonstandard screw threads. Follow the directions in the lathe operator manual for setting the proper metric pitch. (A metric data plate may be attached to the lathe headstock.) Most lathes have the capability of quickly attaching these change gears over the existing gears then realigning the gearing. One change gear in needed for the lead screw gear and one for the spindle, or drive gear.

THREADS PER INCH TO BE CUT	WHEN TO ENGAGE SPLIT NUT
Even Number Of Threads	Engage At Any Graduation On The Dial
Odd Number Of Threads	Engage At Any Main Division
Fractional Number Of Threads	1/2 Threads, E.G. 11 1/2 Engage At Any Other Main Division 1&3, Or 2& 4 Other Fractional Threads Engage At Same Division Every Time
Threads That Are A Multiple of The Number of The Threads per Inch In The Lead Screw	Engage At Any Time That Split Nut Meshes

Figure 7-83. Thread chasing dial instructions.

The metric thread diameter and pitch can be easily measured with a metric measuring tool. If there are no metric measuring tools available, the pitch and diameter must be converted from millimeters to inch measurement, and then a inch micrometer and measuring tools can be used to determine the proper pitch and diameter. Millimeters may be converted to inch measurement either by dividing millimeters by 25.4 inches or multiplying by 0.03937 inches.

For example, a thread with a designation M20 x 2.5 6g/6h is read as follows: the M designates the thread is metric. The 20 designates the major diameter in millimeters. The 2.5 designates the linear pitch in millimeters. The 6g/6h designates that a general purpose fit between nut and bolt is intended. Therefore, to machine this metric thread on a inch designed lathe, convert the outside diameter in millimeters to a decimal fraction of an inch and machine the major diameter to the desired diameter measurement. Convert the linear pitch in millimeters, to threads per inch by dividing the linear pitch of 2.5 by 25.4 to get the threads per inch (10.16 TPI).

Now. a 8-13 TPI thread micrometer can be used to measure the pitch diameter for this metric thread.

To sum up how to convert metric threads to inch measurement:

- Convert major diameter from millimeters to inch measure.
- Convert pitch and pitch diameter to inch measure,
- Set quick change gears according to instructions.

Set up the lathe for thread cutting as in the preceding paragraphs on screw thread cutting, Take a light trial cut and check that the threads are of the correct pitch using a metric screw pitch gage. At the end of this trial cut, and any cut when metric threading, turn off the lathe and back out the tool bit from the workpiece without disengaging the half-nut- lever. Never disengage the lever until the metric thread is cut to the proper pitch diameter, or the tool bit will have to be realigned and set for chasing into the thread.

After backing the tool bit out from the workpiece, traverse the tool bit back to the starting point by reversing the lathe spindle direction while leaving the half-nut lever engaged. If the correct pitch is being cut, continue to machine the thread to the desired depth.

NOTE: If the tool bit needs to be realigned and chased into the thread due to disengagement, of the half-nut lever or having to remove the piece and start again, then the lathe must be reset for threading. Start the lathe, with the tool bit clear of the workpiece engage the lever. Allow the carriage to travel until the tool bit is opposite any portion of the unfinished thread; and then turn off the lathe, leaving the engaged. Now the tool bit can be set back into a thread groove by advancing the cross slide and reference. Restart the lathe, and the tool bit should follow the groove that was previously cut, as long as the half-nut lever stays engaged.

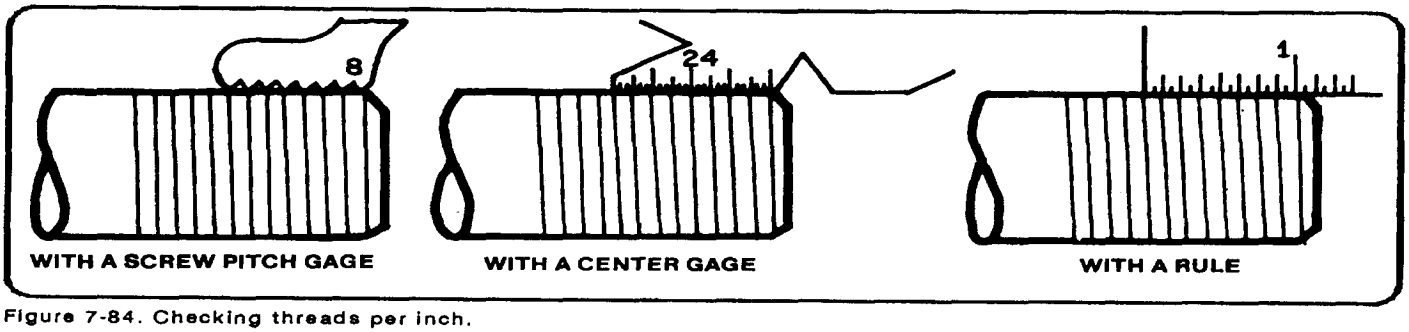

Figure 7-84. Checking threads per inch.

TAPERED SCREW THREADS

Tapered screw threads or pipe threads can be cut on the lathe by setting the tailstock over or by using a taper attachment. Refer to the references for taper per inch and nominal measurements of tapered thread forms. When cutting a tapered thread, the tool bit should be set at right angles to the axis of the work. Do not set the tool bit at a right angle to the taper of the thread. Check the thread tool bit carefully for clearances before cutting since the bit will not be entering the work at right angles to the tapered workpiece surface.

MEASURING EXTERNAL V-SHAPED SCREW THREADS

The fit of the thread is determined by its pitch diameter. The pitch diameter is the diameter of the thread at an imaginary point on the thread where the width of the space and the width of the thread are equal. The fact that the mating parts bear on this point or angle of the thread, and not on the top of it, makes the pitch diameter an important dimension to use in measuring screw threads.

The thread micrometer (Figure 7-85) is an instrument used to gage the thread on the pitch diameter. The anvil is V-Shaped to fit over the V-thread. The spindle, or movable point, is cone-shaped (pointed to a V) to fit between the threads. Since the anvil and spindle both contact the sides of the threads, the pitch diameter is gaged and the reading is given on the sleeve and spindle where it can be read by the operator.

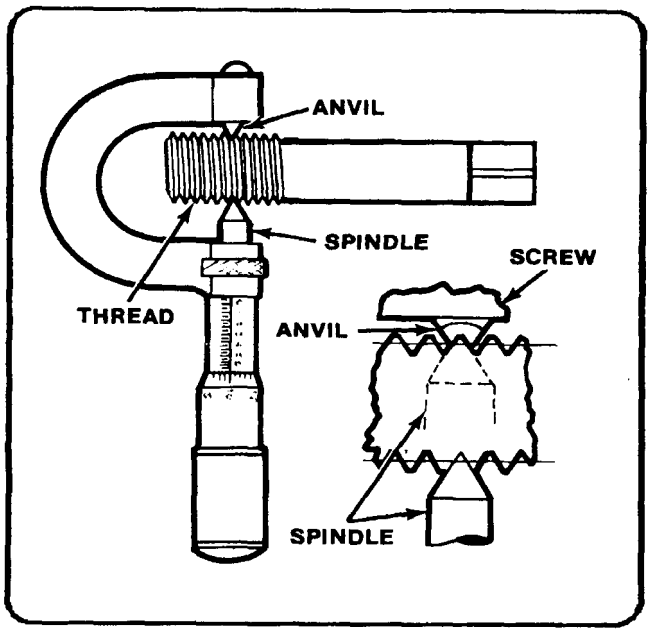

Figure 7-85. Thread micromenter.

Thread micrometers are marked on the frame to specify the pitch diameters which the micrometer is used to measure. One will be marked, for instance, to measure from 8 to 13 threads per inch, while others are marked 14 to 20, 22 to 30, or 32 to 40; metric thread micrometers are also available in different sizes.

The procedure in checking the thread is first to select the proper micrometer, then calculate or select from a table of threads the correct pitch diameter of the screw. Lastly, fit the thread into the micrometer and take the reading.

The 3-wire method is another method of measuring the pitch diameter for American National (60 degree) and Unified threads. It is considered the "best" method for extremely accurate measurement. Page A-28 in Appendix A shows three wires of correct diameter placed in threads with the micrometer measuring over them. The pitch diameter can be found by subtracting the wire constant from the measured distance over the wires. It can be readily seen that this method is dependent on the use of the "'best'" wire for the pitch of the thread. The "best" wire is the size of wire which touches the thread at the middle of the sloping sides. in other words, at the pitch diameter. A formula by which the proper size wire may be found is as follows: Divide the constant 0.57735 by the number of threads per inch to cut. If. for example, 8 threads per inch have been cut, we would calculate 0.577358 = 0.072. The diameter of wire to use for measuring an 8-pitch thread is 0.072.

The wires used in the three-wire method should be hardened and lapped steel wires. they, should be three times as accurate as the accuracy desired in measurement of the threads. The Bureau of Standards has specified an accuracy of 0.0002 inch. The suggested procedure for measuring threads is as follows:

After the three wires of equal diameter have been selected by using the above formula, they are positioned in the thread grooves as shown on page A-28 in Appendix A. The anvil and spindle of an ordinary micrometer are then placed against the three wires and the reading is taken. To determine what the reading of the micrometer should be if a thread is the correct finish size. use the following formula (for measuring Unified National Coarse threads): add three times the diameter of the wire to the diameter of the screw; from the sum, subtract the quotient obtained by dividing the constant 1.5155 by the number of threads per inch. Written concisely, the formula is:

$$m = (D + 3W) - \frac{1.5155}{n}$$

Where m = micrometer measurement over wires,
D = diameter of the thread,
n = number of threads per inch,
W = diameter of wire used

Example: Determine m (measurement over wires) for 1/2 inch, 12-pitch UNC thread. We would proceed to solve as follows:

where W = 0.04811 inch
D = 0.500 inch
n=12

$$\text{Then } m = (0.500 + 0.14433) - \frac{15155}{12}$$

$$m = (0.500 + 0.14433) - 0.1263$$

m = 0.51803 inch (micrometer measurement)

When measuring a Unified National Fine thread, the same method and formula are used. Too much pressure should not be applied when measuring over wires.

Metric threads can also be checked by using the three-wire method by using different numerical values in the formula. Three-wire threads of metric dimensions must have a 60° angle for this method.

$$M = PD + CPD = M - C$$

M = measurement over the wires
PD = pitch diameter
C = N constant (This is found in Table 7-11 in Appendix A)

The "best" wire size can be found by converting from inch to metric, or by using Table 7-11 in Appendix A.

An optical comparator must be used to check the threads if the tolerance desired is less than 0.001 inch (0.02 mm). This type of thread measurement is normally used in industrial shops doing production work.

CUTTING INTERNAL THREADS

Internal threads are cut into nuts and castings in the same general manner as external threads. If a hand tap is not available to cut the internal threads, they must be machined on the lathe.

An internal threading operation will usually follow a boring and drilling operation, thus the machine operator must know drilling and boring procedures before attempting to cut internal threads. The same holder used for boring can be used to hold the tool bit for cutting internal threads. Lathe speed is the same as the speed for external thread cutting.

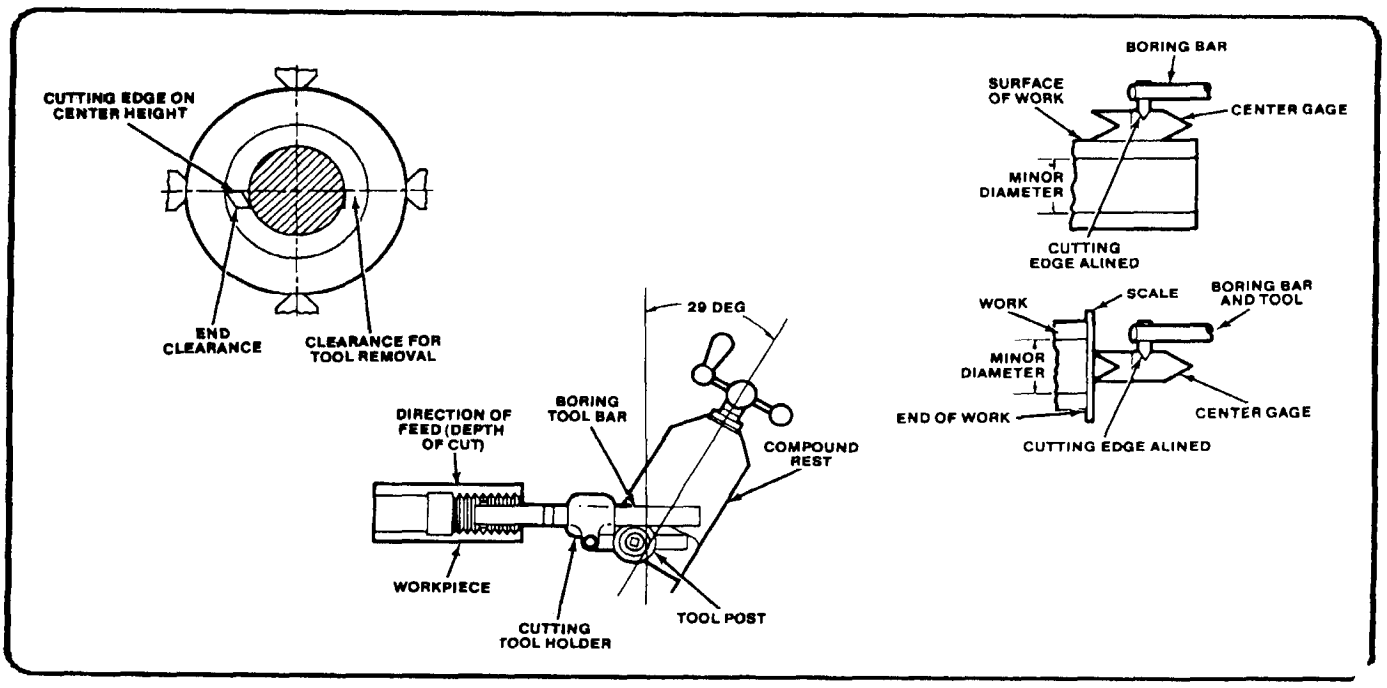

Figure 7-86. Internal thread cutting.

To prevent rubbing, the clearance of the cutter bit shank and boring tool bar must be greater for threading than for straight boring because of the necessity of moving the bit clear of the threads when returning the bit to the right after each cut.

The compound rest should be set at a 29° angle to the saddle so that the cutter bit will feed after each cut toward the operator and to his left.

Although the setup shown in Figure 7-86 would be impractical on extremely large lathes, it allows a degree of safety on common sized machines by having the compound ball crank positioned away from any work holding device that would be in use on the lathe, eliminating the possibility of the operator's hands or the compound rest contacting the revolving spindle and work holding devices.

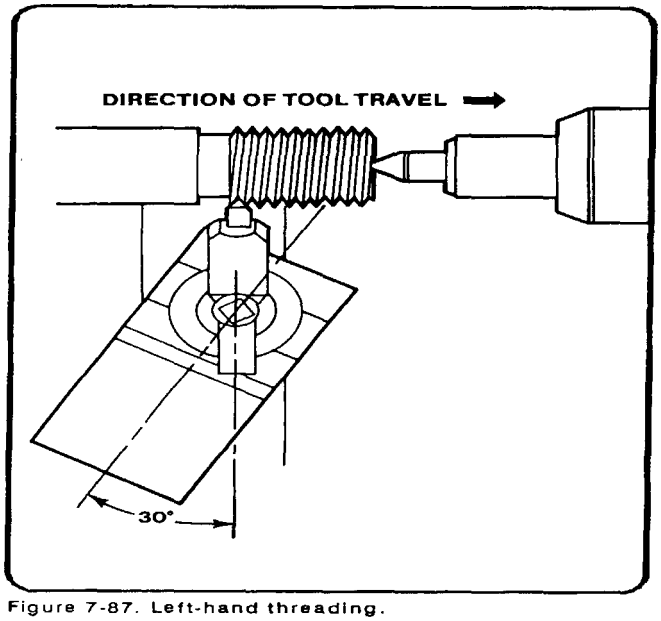

Figure 7-87. Left-hand threading.

Cutting 60° left-hand threads. A left-hand thread is used for certain applications where a right-hand thread would not be practicable, such as on the left side of a grinder where the nut may loosen due to the rotation of the spindle. Left-hand threads are cut in the same manner as right hand threads, with a few changes. Set the feed direction lever so that the carriage feeds to the right, which will mean that the lead screw revolves opposite the direction used for right-hand threading. Set the compound rest 29° to the left of perpendicular. Cut a groove at the left end of the threaded section, thus providing clearance for starting the cutting tool (see Figure 7-87). Cut from left to right until the proper pitch dimension is achieved.

CUTTING EXTERNAL ACME THREADS

The first step is to grind a threading tool to conform to the 29° included angle of the thread. The tool is first ground to a point, with the sides of the tool forming the 29° included angle (Figure 7-88). This angle can be checked by placing the tool in the slot at the right end of the Acme thread gage.

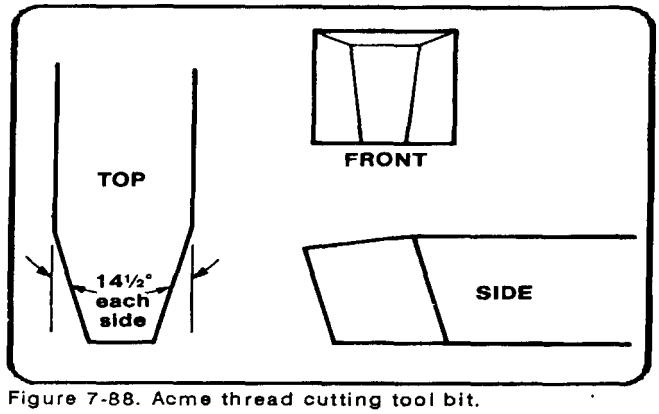

Figure 7-88. Acme thread cutting tool bit.

If a gage is not available, the width of the tool bit point may be calculated by the formula:

Width of point= 0.3707P -0.0052 inch

Where P = Number of threads per inch

Be sure to grind this tool with sufficient side clearance so that it will cut. Depending upon the number of threads per inch to be cut, the point of the tool is ground flat to fit into the slot on the Acme thread gage that is marked with the number of threads per inch the tool is to cut. The size of the flat on the tool point will vary depending upon the thread per inch to be machined.

After grinding the tool, set the compound rest to one-half the included angle of the thread (14 1/2°) to the right of the vertical centerline of the machine (Figure 7-89). Mount the tool in the holder or tool post so that the top of the tool is on the axis or center line of the workpiece. The tool is set square to the work, using the Acme thread gage. This thread is cut using the compound feed. The depth to which you feed the compound rest to obtain total thread depth is determined by the formula given and illustrated in Table 7-9 in Appendix A. The remainder of the Acme thread-cutting operation is the same as the V-threading operation previously described. The compound rest should be fed into the work only 0.002 inch to 0.003 inch per cut until the desired depth of thread is obtained.

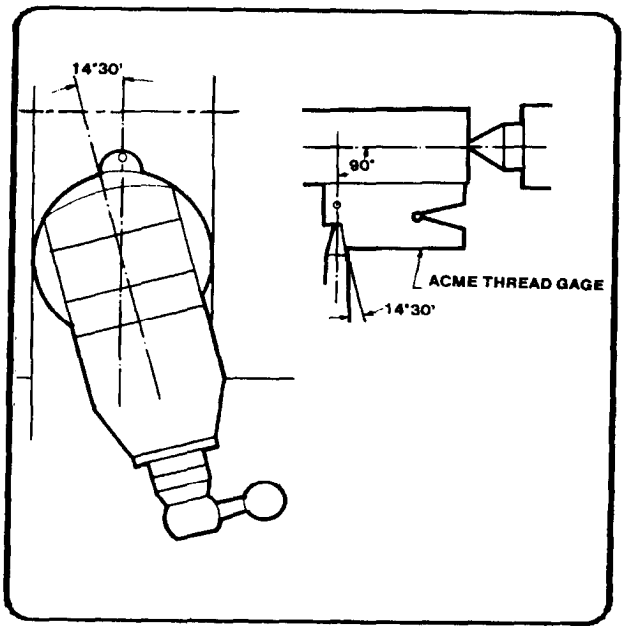

Figure 7-89. Acme and 29° worm thread setup.

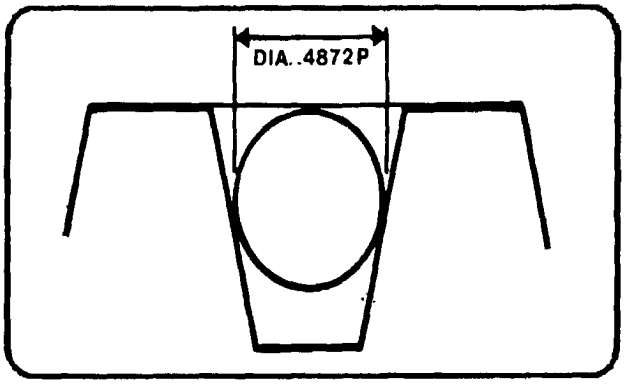

Figure 7-90. Using one wire to measure an Acme thread

The formulas used to calculate Acme thread depth are in Table 7-9 in Appendix A. The single wire method can be used to measure the accuracy of the thread (Figure 7-90). A single wire or pin of the correct diameter is placed in the threaded groove and measured with a micrometer. The thread is the correct size when the micrometer reading over the wire is the same as the major diameter of the thread and the wire is placed tightly into the thread groove. The diameter of the wire to be used can be calculated by using this formula:

Wire diameter = 0.4872 x pitch

Thus, if 6 threads per inch are being cut, the wire size would be:

0.4872 x 1/6= 0.081 inch

Cutting the 29° worm screw thread (Brown and Sharpe). The tool bit used to cut 29° worm screw threads will be similar to the Acme threading tool, but slightly longer with a different tip. Use Table 7-9 in Appendix A to calculate the length of the tool bit and tip width. The cutting is done just like cutting an Acme thread.

CUTTING SQUARE THREADS

Because of their design and strength, square threads are used for vise screws, jackscrews, and other devices where maximum transmission of power is needed. All surfaces of the square thread form are square with each other, and the sides are perpendicular to the center axis of the threaded part. The depth, the width of the crest, and root are of equal dimensions. Because the contact areas are relatively small and do not wedge together, friction between matching threads is reduced to a minimum. This fact explains why square threads are used for power transmission.

Before the square thread cutting tool can be ground, it is necessary first to determine the helix angle of the thread. The sides of the tool for cutting the square thread should conform with the helix angle of the thread (Figure 7-79).

For cutting the thread, the cutting edge of the tool should be ground to a width exactly one-half that of the pitch. For cutting the nut, it should be from 0.001 to 0.003 of an inch larger to permit a free fit of the nut on the screw.

The cutting of the square thread form presents some difficulty. Although it is square, this thread, like any other, progresses in the form of a helix, and thus assumes a slight twist. Some operators prefer to produce this thread in two cuts, the first with a narrow tool to the full depth and the second with a tool ground to size. This procedure relieves cutting pressure on the tool nose and may prevent springing the work. The cutting operation for square threads differs from cutting threads previously explained in that the compound rest is set parallel to the axis of the workpiece and feeding is done only with the cross feed. The cross feed is fed only 0.002 inch or 0.003 inch per cut. The finish depth of the thread is determined by the formula.

Depth = 1/2P

The width of the tool point is determined by this formula also and will depend upon the number of threads per inch to be machined. It is measured with a micrometer, as square thread gages are not available.

SPECIAL OPERATIONS ON THE LATHE

KNURLING ON THE LATHE

Knurling is a process of impressing a diamond shaped or straight line pattern into the surface of a workpiece by using specially shaped hardened metal wheels to improve its appearance and to provide a better gripping surface. Straight knurling is often used to increase the workpiece diameter when a press fit is required between two parts.

Holding Devices for Knurling

The setup for knurling can be made between centers or mounted in a solid chuck. Never attempt to knurl by holding the work in a rubber or metal collet chuck, since the great pressures of knurling could damage these devices. It is important to support the work while knurling. If mounting the work between centers, make the center holes as large as possible to allow for the strongest hold. If using a chuck to hold the work, use the tailstock center to support the end of the work. If doing a long knurl, use a steady rest to support the work and keep the piece from springing away from the tool.

Knurling Tools

The knurling tool (Figure 7-10) can be designed differently, but all accomplish the same operation. Two common types of knurling tools are the knuckle joint and revolving head type of knurling tools. The knuckle joint type is equipped with a single pair of rollers that revolve with the work as it is being knurled. The revolving head type of tool is fitted with three pairs of rollers so that the pitch can be changed to a different knurl without having to change the setup. There are two knurl patterns, diamond and straight.

There are three pitches of rollers, coarse, medium, and tine (Figure 7-9l).

The diamond is the most common pattern and the medium pitch is used most often. The coarse pitch is used for large-diameter work; the fine pitch is used for small-diameter work.

Knurling

The knurling operation is started by determining the location and length of the knurl, and then setting the machine for knurling. A slow speed is needed with a medium feed. Commonly, the speed is set to 60 to 80 RPM, while the feed is best from 0.015 to 0.030 inch per revolution of the spindle. The knurling tool must be set in the tool post with the axis of the knurling head at center height and the face of the knurls parallel with the work surface. Check that the rollers move freely and are in good cutting condition; then oil the knurling tool cutting wheels where they contact the workpiece. Bring the cutting wheels (rollers) up to the surface of the work with approximately 1/2 of the face of the roller in contact with the work.

If the face of the roller is placed in this manner, the initial pressure that is required to start the knurl will be lessened and the knurl may cut smoother. Apply oil generously over the area to be knurled. Start the lathe while forcing the knurls into the work about 0.010 inch. As the impression starts to form, engage the carriage feed lever (Figure 7-92). Observe the knurl for a few revolutions and shut off the machine. Check to see that the knurl is tracking properly, and that it is not on a "double track" (Figure 7-93).

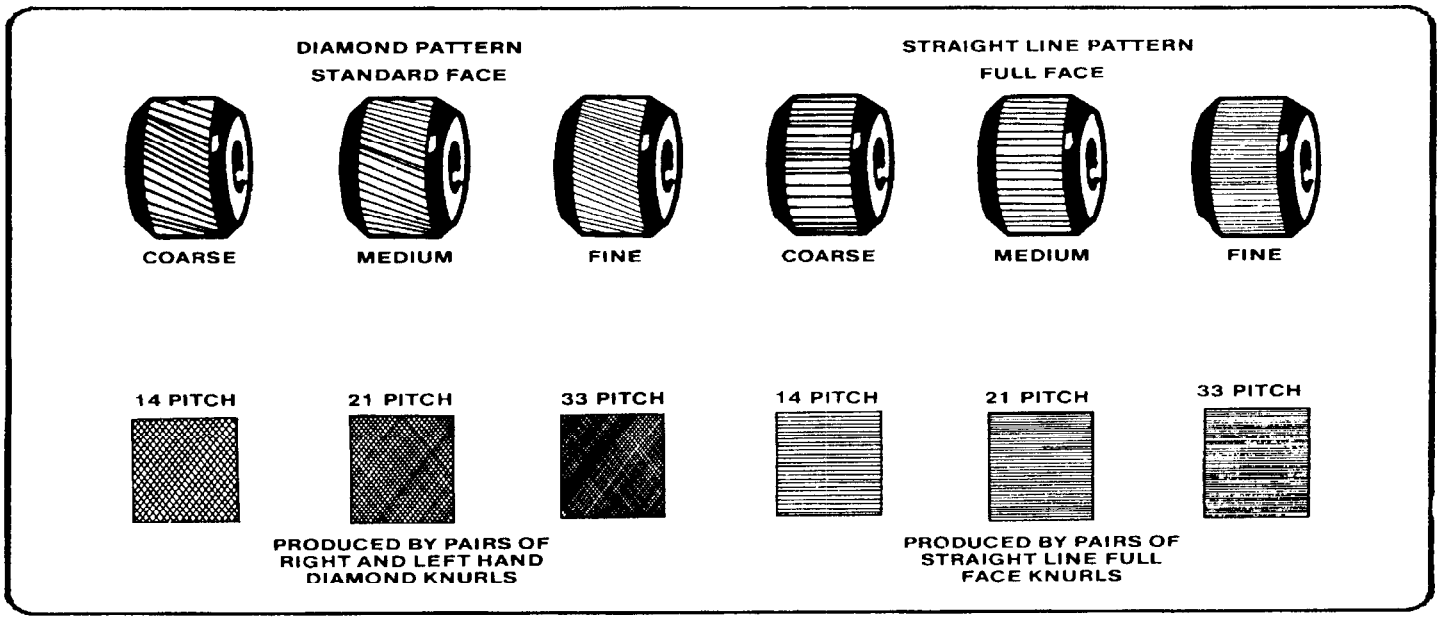

Figure 7-91. Knurling patterns and pitches.

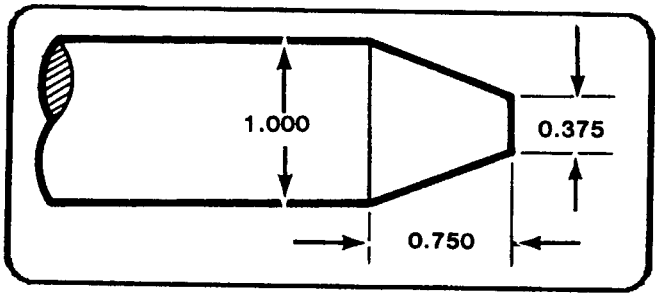

Figure 7-92. Starting the knurl.

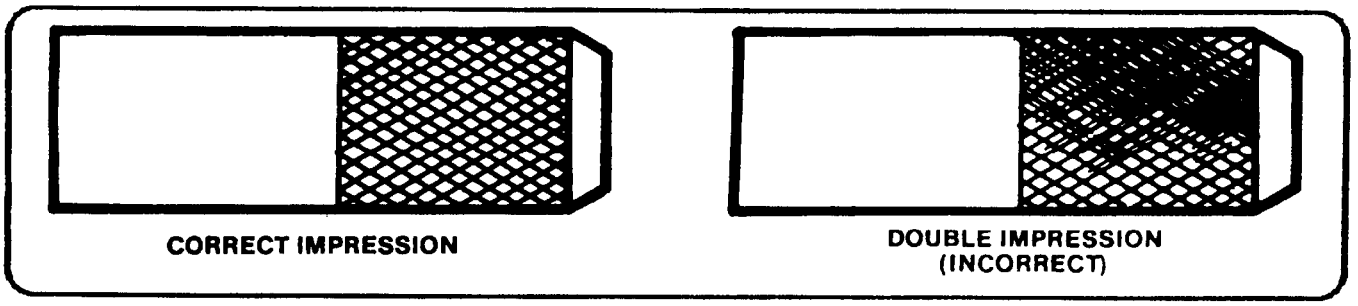

Figure 7-93. Correct and incorrect knurls

Reset the tool if needed; otherwise, move the carriage and tool back to the starting point and lightly bring the tool back into the previously knurled portion. The rollers will align themselves with the knurled impressions. Force the knurling tool into the work to a depth of about 1/64 inch and simultaneously engage the carriage to feed toward the headstock. Observe the knurling action and allow the tool to knurl to within 1/32 inch of the desired end of cut, and disengage the feed. Hand feed to the point where only one-half of the knurling wheel is off the work, change the feed direction toward the tailstock and force the tool deeper into the work.

Engage the carriage feed and cut back to the starting point. Stop the lathe and check the knurl for completeness. Never allow the knurling tool to feed entirely off the end of the work, or it could cause damage to the work or lathe centers. The knurl is complete when the diamond shape (or straight knurl) is fully developed. Excessive knurling after the knurl has formed will wear off the full knurl and ruin the work diameter. Move the tool away from the work as the centers. The knurl is complete when the diamond shape (or work revolves and shut off the lathe. Clean the knurl with a brush and then remove any burrs with a file.

Special Knurling Precautions

Never stop the carriage while the tool is in contact with the work and the work is still revolving as this will cause wear rings on the work surface (Figure 7-94). Check the operation to ensure that the knurling tool is not forcing the work from the center hole. Keep the work and knurling tool well oiled during the operation. Never allow a brush or rag to come between the rollers and the work or the knurl will be ruined.

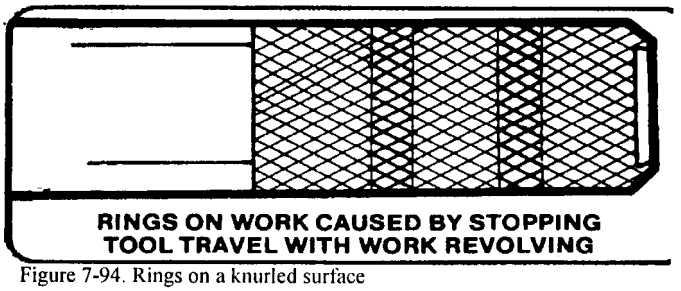

Figure 7-94. Rings on a knurled surface

DRILLING WITH THE LATHE

Frequently, holes will need to be drilled using the lathe before other internal operations can be completed, such as boring, reaming, and tapping. Although the lathe is not a drilling machine, time and effort are saved by using the lathe for drilling operations instead of changing the work to another machine. Before drilling the end of a workpiece on the lathe, the end to be drilled must be spotted (center- punched) and then center- drilled so that the drill will start properly and be correctly aligned. The headstock and tailstock spindles should be aligned for all drilling, reaming, and spindles should be aligned for drilling, reaming, and tapping operations in order to produce a true hole and avoid damage to the work and the lathe. The purpose for which the hole is to be drilled will determine the proper size drill to use. That is, the drill size must allow sufficient material for tapping, reaming, and boring if such operations are to follow.

The correct drilling speed usually seems too fast due to the fact that the chuck, being so much larger than the drill, influences the operator's judgment. It is therefore advisable to refer to a suitable table to obtain the recommended drilling speeds for various materials, such as Table 4-2 in Appendix A.

Supporting drills in the tailstock

Methods of supporting the twist drill in the tailstock can vary (Figure 7-95). Straight shank drills are usually held in a drill chuck, which is placed in the taper socket of the tailstock spindle. Combination drill and countersinks (center drills), counterbores, reamers, taps, and other small shank cutters can also be supported in this way.

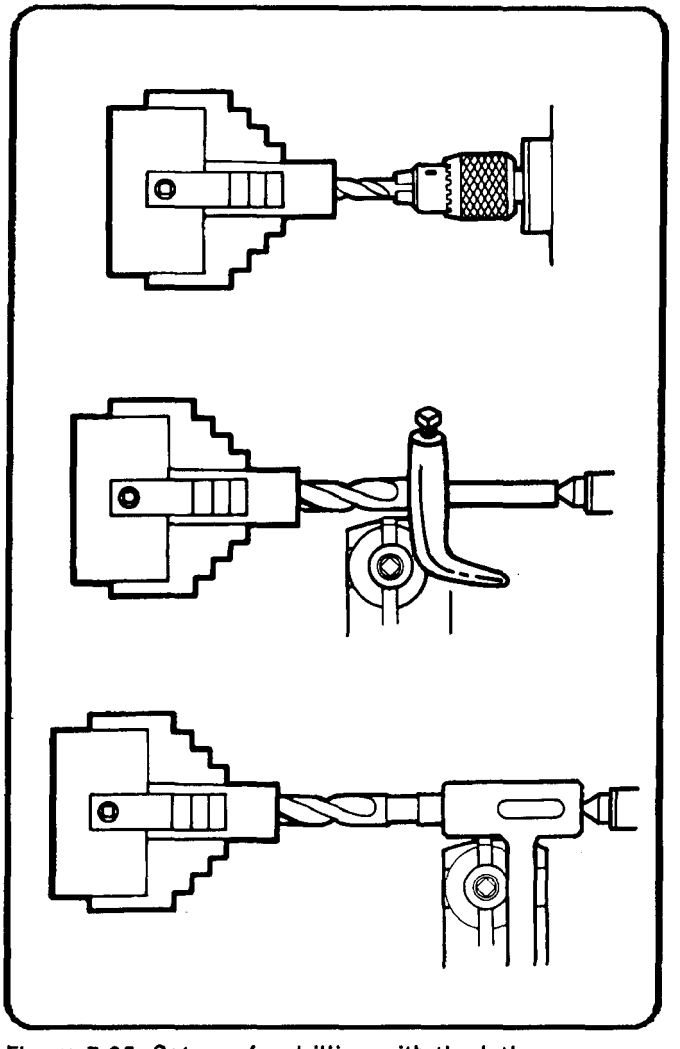

Figure 7-95- Set ups for drilling with the lathe.

Tapered-shank twist drills may be held directly in the tailstock tapered spindle as long as a good fit exists. If the drill shank is not the correct size, then a drill socket or sleeve may be used in the tailstock spindle.

A twist drill holder is used to support large twist drills with the tailstock center. The drill is inserted into the holder and the tailstock center is placed in the center hole which is located at the rear of the drill holder. The holder will rest on the cross slide or compound rest and must be supported by hand until it is held secure by pressure between the tailstock and headstock. When using this method, never withdraw or loosen the tailstock spindle while the lathe is rotating or the workpiece can be thrown out at the operator. Always stop the machine before attempting to withdraw the twist drill.

Another method of supporting a large twist drill in the tailstock is to fasten a lathe dog to the drill shank and support the rear of the drill with the tailstock center in the center hole in the tang of the drill.

Supporting Drills in the Headstock

The drill can also be held and rotated in the headstock with the work held stationary against the tailstock. Straight shank twist drills are supported in the headstock by a drill chuck or collet which is mounted in the headstock spindle. A universal or independent jaw chuck can also be used to hold and turn twist drills if a headstock drill chuck is not available. Tapered shank twist drills can be mounted in the headstock by using a special adapter, such as a sleeve with an internal taper to hold the tapered drill, while the outside of the sleeve is made to fit into the headstock spindle.

Mounting Work for Drilling

If the work is to be rotated and the twist drill will be fed into the end of the work, the work should be mounted in a chuck, on a faceplate, or in a collet. The center of the hole to be drilled should be accurately marked and punched as described for drilling setups.

Always start holes by using a center drill, since this method will be the most accurate and the most efficient. Center-drill by rotating the spindle at computed drill speed and gently bringing the point of the center drill into the end of the work until the proper depth is reached.

If the twist drill is to be rotated by the headstock spindle and the workpiece is to be supported by a V-center mounted in the tailstock, the work should be carefully positioned by hand and

the drill moved lightly into contact with the workpiece before starting the lathe. The workpiece must be well supported during drilling operations to prevent the work from being thrown from the lathe or rotating with the drill.

Drilling Operations

To start the drilling operation, compute the correct RPM for the drill and set the spindle speed accordingly. Ensure the tailstock is clamped down on the lathe ways. The feed is controlled by turning the tailstock handwheel. The graduations on the tailstock spindle are used to determine the depth of cut.

If a large twist drill is used, it should be proceeded by a pilot drill, the diameter of which should be wider than the larger drills web.

Use a suitable cutting fluid while drilling (Table 4-3 in Appendix A). Always withdraw the drill and brush out the chips before attempting to check the depth of the hole. If the drill is wobbling and wiggling in the hole, use a tool holder turned backwards (Figure 7-96) to steady the drill. Always use a drill that is properly ground for the material to be drilled. Use care when feeding the drill into the work to avoid breaking the drill off in the work. The drill should never be removed from the work while the spindle is turning because the drill could be pulled off the tailstock spindle and cause injury or damage.

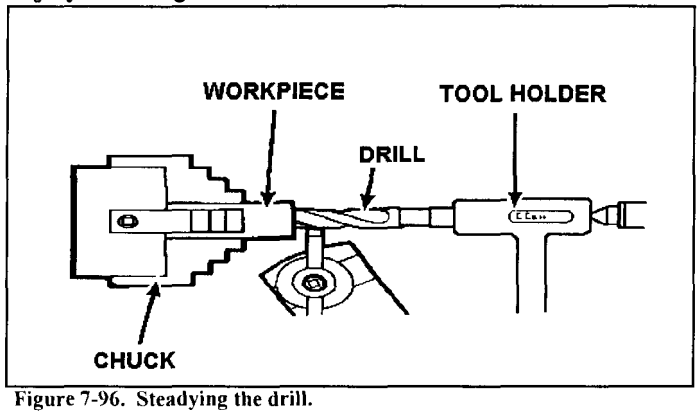

Figure 7-96. Steadying the drill.

BORING WITH THE LATHE

Boring is the enlarging and truing of a hole by removing material from internal surfaces with a single-point cutter bit. On the lathe, boring is accomplished in either of these two methods:

- Mounting the holder and boring tool bar with cutter bit on the tool post and revolving the workpiece.
- Mounting the workpiece in a fixed position to the carriage and revolving the boring tool bar and cutter bit in a chuck attached to the headstock spindle. (This is a special process and not used in most machine shops).

Mounting Workpiece for Boring

The workpiece may be supported in a chuck or fastened to a faceplate for boring operations depending upon of the material to be machined. When boring is to be performed on the ends of long stock, the workpiece is mounted in a chuck and a steady rest is used to support the right end near the cutter bit. Some boring operations require the use of special chuck-mounted mandrels to hold workplaces that cannot be successfully mounted otherwise.

Purpose for Boring

Boring is necessary in many cases to produce accurate holes. Drilled holes are seldom straight due to imperfections in the material which cause drills to move out of alignment. Therefore, where accuracy is important, drilled holes are usually made undersize and then bored or reamed to the proper dimensions. Boring is also useful in truing large holes in flat material. In this case, the hole is cut undersize using a bandsaw or trepanning tool and is trued to proper dimensions by boring.

Boring Cutter Bit Setup

The cutter bit used for boring is similar to that used for external turning on the lathe. The bit is usually held in a **soft** or semisoft bar called a boring tool bar. The boring tool bar (Figure 7-11) is supported by a cutting tool holder which fits into the lathe tool post.

Boring tool bars are supplied in several types and sizes for holding different cutter bits. The bit is supported in the boring tool bar at a 90°, 30°, or 45° angle, depending upon the nature of the workpiece being bored. Most general boring is accomplished with a 90° cutter bit. The bit is mounted at a 30° or 45° angle to the axis of the boring tool bar when it is necessary to cut up to the bottom of a hole or finish the side of an internal shoulder. It is desirable that the boring tool bar be as large as possible without interfering with the walls of the hole. The cutter bit should not extend far beyond the boring tool bar and the bit securely in the bar, yet not have the shank-end protrude far from the bar.

The cutter bits used for boring are shaped like left-hand turning and facing cutter bits. Greater attention must be given to the end clearance angle and the back rake angle because of the curvature of the hole (Figure 7-97).

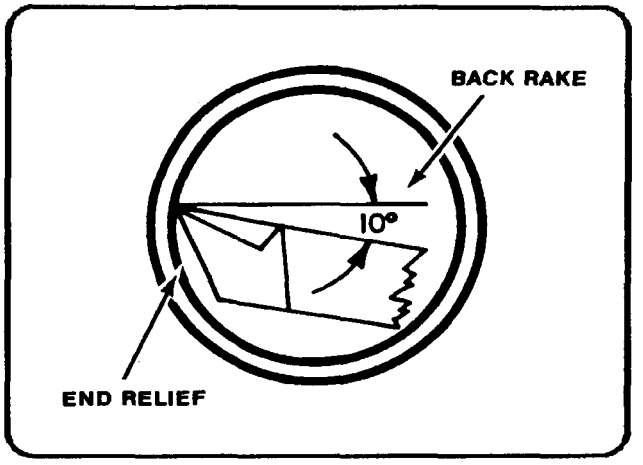

Figure 7-97. Proper position of boring cutter bit.

The boring tool bar should be clamped as close to the holder and tool post as possible considering the depth of boring to be done. The bar will have a tendency to spring away from the workpiece if the bar overhangs the tool post too far. If deep boring is to be performed, it will be necessary that the bar be as thick as possible to counteract this springing tendency.

Straight Boring Operation

The cutter bit is positioned for straight boring operations with its cutting edge set slightly above center. Depending on the rigidity of the setup, the boring tool will have a tendency to spring downward as pressure is applied to the cutting edge. By setting the cutter slightly above center, compensation has been made for the downward spring and the cutter will actually be positioned on the exact center of the workpiece during machining operations (Figure 7-98). The cutting edge faces forward for most operations so the lathe can turn in its normal counterclockwise direction. If it becomes necessary to position the cutter bit against the rear wall of the hole for a special operation, a right-hand turning cutter bit is used and the spindle rotation is reversed.

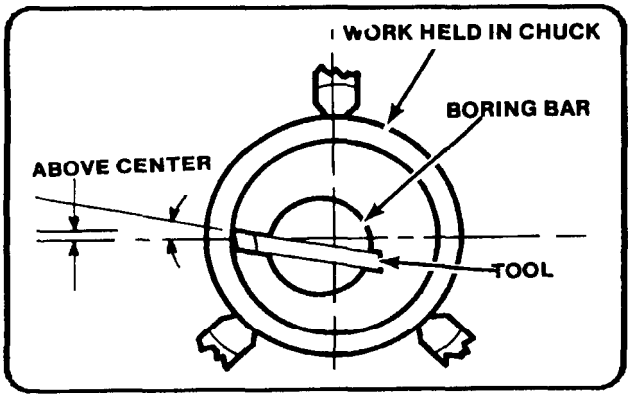

Figure 7-98. Boring cutter bit above center.

Position the cutter bit so that the cutting edge is immediately to the right of the workpiece and clears the wall of the hole by about 1/16 inch. Traverse the carriage by hand, without starting the lathe, to move the cutter bit and boring tool bar into the hole to the depth of the intended boring and out again to determine whether there is sufficient clearance to prevent the back of the cutter bit and the boring tool bar from rubbing the inside of the hole. When the clearance is satisfactory, position the cutter bit to the right of the workpiece ready for the first cut. Use the micrometer carriage stop to control the depth of tool travel.

The same speeds recommended for straight turning should be used for straight boring. Feeds for boring should be considerably smaller than feeds used for straight turning because there is less rigidity in the setup. Decrease the depth of cut for each pass of the tool bit for the same reason. It is often advisable to feed the cutter bit into the hole to the desired depth and then reverse the feed and let the cutter bit move out of the hole without changing the depth of feed. It is also good practice to take a free cut every several passes to help eliminate bell mouthing of the workpiece. This practice will correct any irregularities caused by the bit or boring tool bar springing because of the pressure applied to the bit.

TAPPING AND HAND DIE THREADING

The lathe can be used as a device to hold and align a tap or hand die to cut internal or external threads quickly for threads that do not require a high degree of accuracy or a fine finish. More information on taps and dies can be found in TM 9-243.

Hand Tapping on the Lathe

Tapping can be done on the lathe by power or by hand. Regardless of the method, the hole must be drilled with the proper sized tap drill and chamfered at the end. The shank end of the tap is supported by the tailstock center. A slight pressure is maintained against the tap to keep its center hole on the center and to help the cutting teeth of the tap engage the work (Figure 7-99).

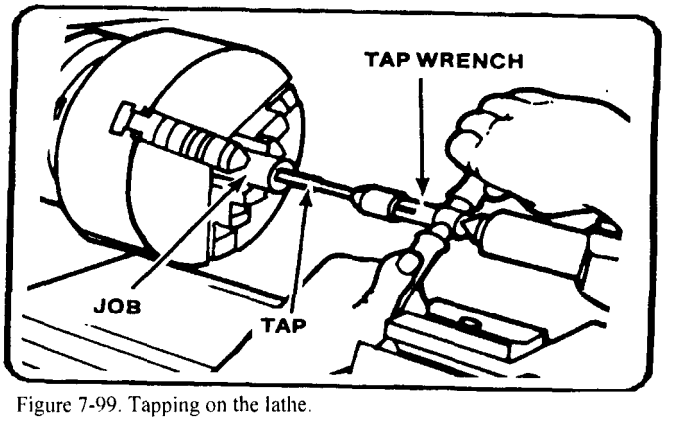

Figure 7-99. Tapping on the lathe.

The work will rotate when tapping using lathe power. Use a very slow spindle speed (10 to 30 RPM) and plenty of cutting fluid or coolant. Install a tap and reamer wrench on the end of the tap to keep it from turning. Support the wrench on the compound rest. Power is not recommended for taps under 1/2 inch in diameter or when tapping steel. Ensure that the tap wrench handle contacts the compound rest before engaging power or the end of the handle will whip around and could crush a finger or cause other injury or damage. Do not attempt to start the tap into the hole with the work revolving. Always keep the tap snug in the center hole to prevent the tap from coming out of alignment and ruining the threads.

The setup for hand tapping in a lathe is similar to that used in power tapping. The headstock chuck is held steady and not rotated. The tap is turned by using an adjustable wrench. Lock the lathe gears so that the headstock will not move when using a large tap. Back off the tap frequently when tapping to break the chips and allow for a clean thread.

Hand Die Threading on the Lathe

Die threading on a lathe is very similar to tapping on a lathe, except that the die is aligned perpendicular to the work axis by pressure exerted against the back surface of the die. This pressure can be exerted by means of a drill pad, by using the tailstock spindle, or by using the head of the drill chuck for small dies. Die threading can be done using power or by hand, using the same procedures as tapping. Power can be used to remove the die from the work if the die stock handle is swung to the opposite side and low reverse power is used. It is difficult to cut very coarse threads with a die because of the great amount of force needed to turn the die. It is advisable to open up the die to its full width, rough-cut the threads, and then close up the die and go over the threads for a finished size. Always use a lubricant or coolant for this operation.

REAMING ON THE LATHE

Reamers are used to finish drilled holes or bores quickly and accurately to a specified diameter. When a hole is to be reamed, it must first be drilled or bored to within 0.004 to 0.012 inch of the finished size since the reamer is not designed to remove much material.

Reaming with a Machine Reamer

The hole to be reamed with a machine reamer must be drilled or bored to within 0.012 inch of the finished size so that the machine reamer will only have to remove the cutter bit marks.

The workpiece is mounted in a chuck at the headstock spindle and the reamer is supported by the tailstock in one of the methods described for holding a twist drill in the tailstock.

The lathe speed for machine reaming should be approximately one-half that used for drilling.

Reaming with a Hand Reamer

The hole to be reamed by hand must be within 0.005 inch of the required finished size.

The workpiece is mounted to the headstock spindle in a chuck and the headstock spindle is locked after the piece is accurately setup The hand reamer is mounted in an adjustable tap and reamer wrench and supported with the tailstock center. As the wrench is revolved by hand, the hand reamer is fed into the hole simultaneously by turning the tailstock handwheel.

The reamer should be withdrawn from the hole carefully, turning it in the same direction as when reaming. Never turn a reamer backward. See Table 4-3 in Appendix A for the proper cutting fluid for reaming. Never use power with a hand reamer or the work could be ruined.

FILING AND POLISHING ON THE LATHE

Filing and polishing are performed on the lathe to remove tool marks, reduce the dimension slightly, or improve the finish.

Filing on the Lathe

Mill files are generally considered best for lathe filing. The bastard cut mill type hand file is used for roughing and the second cut mill-type hand file for the finer class of work. Other types such as the round, half-round, and flat hand files may also be used for finishing irregular shaped workplaces. Never use a file without a handle.

For filing ferrous metals, the lathe spindle speed should be four or five times greater than the rough turning speed. For filing nonferrous metals, the lathe spindle speed should be only two or three times greater than the roughing speed. Too slow a speed may cause the workpiece to be filed out of round, while too high a speed will cause the file to slide over the workpiece, dulling the file and glazing the piece.

NOTE: When filing, file left-handed if at all possible to avoid placing your arm over the revolving chuck or lathe dog.

The file is held at an angle of about 10° to the right and moved with a slow sliding motion from left to right so that the teeth will have a shearing action (Figure 7-100). The direction of stroke and angle should never be the opposite, as this will cause chatter marks on the piece. The file should be passed slowly over the workpiece so that the piece will have made several revolutions before the stroke is completed. The pressure exerted on the file with the hands should be less than when filing at the bench. Since there are less teeth in contact with the workpiece, the file must be cleaned frequently to avoid scratching.

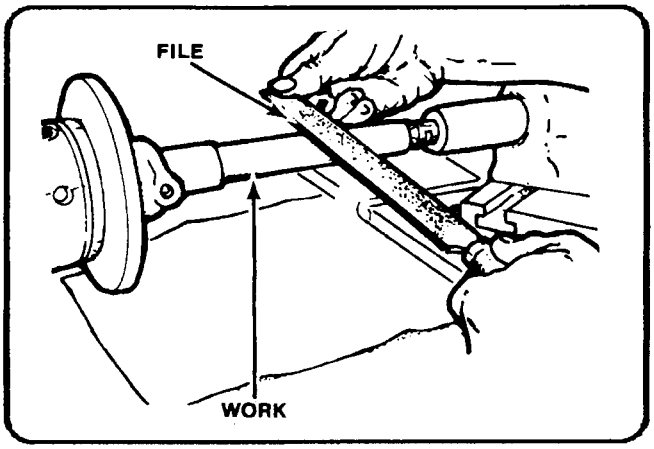

Figure 7-100. Filing on the lathe.

Since filing should be used for little more than to remove tool marks from the workpiece, only 0.002 to 0.005 inch should be left for the tiling operation.

Polishing on the Lathe

Polishing with either abrasive cloth or abrasive paper is desirable to improve the surface finish after filing. Emery abrasive cloth is best for ferrous metals while abrasive paper often gives better results on nonferrous materials. The most effective speed for polishing with ordinary abrasives is approximately 5,000 feet per minute. Since most lathes are not capable of a speed this great for an average size workpiece, it is necessary to select as high a speed as conditions will permit.

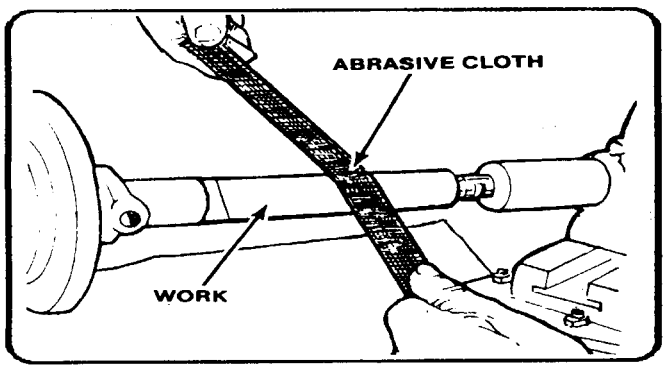

Figure 7-101. Polishing on the lathe.

In most cases the abrasive cloth or paper is held directly in the hand and applied to the workpiece, although it may be tacked over a piece of wood and used in the same manner as a file. Improvised clamps may also be used to polish plain round work.

Since polishing will slightly reduce the dimensions of the workpiece, 0.00025 to 0.0005 inch should be allowed for this operation. Figure 7-101 shows how to hold the abrasive strip when polishing. Note that the ends of the strip are separated. This prevents the strip from grabbing and winding around the work, which could pull the operator's hand into the work. Move the polishing strip slowly back and forth to prevent material building up on the strip which causes polishing rings to form on the work. To produce a bright surface, polish the work dry. To produce a dull satin finish, apply oil as the polishing operation is in progress.

ECCENTRIC WORK ON THE LATHE

Eccentric work is work that is turned off center, or not on the normal center axis. An engine crankshaft is a good example of an eccentric workpiece. Crankshafts normally have a main center axis, called a main journal, and offset axes, which produce the throw and the eccentric diameters of the mechanism. An eccentric shaft may have two or more diameters and several different center axes. The amount of eccentricity, or half of the throw, is the linear distance that a set of center holes has been offset from the normal center axis of the workpiece. Eccentric turning on the lathe is used for the following eccentric turning situations:

When the throw is large enough to allow all centers to be located on the workpiece at the same time.

When the throw is too small to allow all centers to fit into the end of a workpiece at the same time. (The center drilled holes are too large.)

When the throw is so great that all centers cannot be located on the work, or in other words, a throw larger than the largest diameter of the workpiece. (This type of crank is usually made in separate pieces and connected together, since the cost of wasted material would be too great if constructed from one piece on the lathe).

Turning an Eccentric with Center Holes

Before an eccentric workpiece can be machined, it is necessary to center-drill both ends of the workpiece, including the offset centers. If the workpiece is large enough to position all center axes on the work at the same time, the machining operation will be simple and easy.

- First determine the stock required by adding the throws plus 1/8 inch for machining (Figure 7-102).
- Face the work to length in a chuck.
- Remove the piece and apply layout dye to both ends.
- Mount the work in a V- block and, using a surface plate and venire height scriber, lay out the normal center axis and the offset center axes on both ends.
- Accurately prick punch the intended centers, check for accuracy, and then enlarge the punch marks with a center punch.
- Center- drill both sets of center punch marks by using a milling machine, a drilling machine, or the four-jaw independent chuck of the lathe with a dial indicator to line up the centers.
- Mount the work in the lathe between centers and turn the largest diameter first. If all diameters are the same, turn the middle diameter journal first.
- After turning the center journal down to the required diameter, remount the work in an offset center hole and machine the throw diameter to the finished size.
- Accurately prick punch the intended centers, check for accuracy, and then enlarge the punch marks with a center punch.
- Center- drill both sets of center punch marks by using a milling machine, a drilling machine, or the four-jaw independent chuck of the lathe with a dial indicator to line up the centers.
- Mount the work in the lathe between centers and turn the largest diameter first. If all diameters are the same, turn the middle diameter journal first.
- After turning the center journal down to the required diameter, remount the work in an offset center hole and machine the throw diameter to the finished size.

Additional throws are machined in the same manner. Throw positions may be started by cutting with a parting tool to establish the shoulders, which may aid the turning operation. The tool bit selected will depend on the material to be machined and on the depth of cut desired.

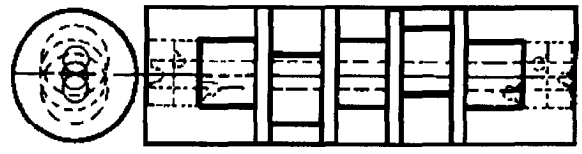

Eccentric turning when the throw is too small to allow properly drilled center holes (add 3/4" length for each center hole).

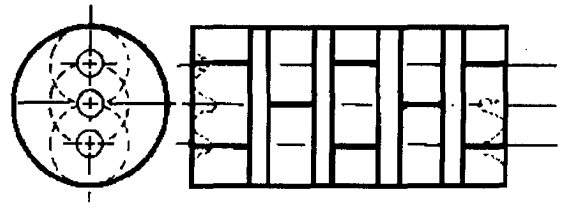

Eccentric turning when the throw is large enough to allow all centers to be located on the workpiece at the same time. In this case, the eccentric throws must be turned before the main journal.

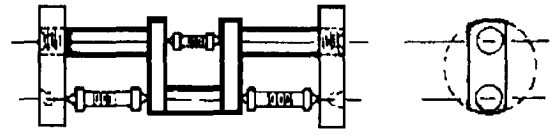

Eccentric turning a large throw is not normally done on a lathe, however, it may be accomplished with special end and center supports.

Figure 7-102. Eccentric turning.

Turning an Eccentric with Close Center Holes

If turning an eccentric that has the different centers placed too close together, a different procedure should be used. Cut

the stock 3/4 inch oversized and just face both ends to clean up the saw cuts Lay out and center-drill the normal. center axis and turn down those diameters on the center axis with the work mounted between centers. Remove the work and remount into a chuck. Face both ends to the required length and center-drill the offset centers. Remount the work between these centers and machine the eccentric diameters to size. For eccentric work that has a limited distance between each center, this method is safer than trying to use a very shallow center-drilled hole to hold the work between centers (Figure 7-102).

Turning an Eccentric Using Throw Plates

If the lathe is to be used to turn a crank with a great throw, or a throw that is greater than normally machined on a lathe (Figure 7- 102), special throw plates must be fabricated to hold the ends of the work while turning. The special throw plates will be used as support blocks to enable the offset center holes to be machined into the throw plates and allow for eccentric turning. eccentric turning, it is not recommended for normal lathe operations. Special crankshaft turning and grinding equipment is available for this type of machining.

RECESSING DRILLED AND BORED HOLES

General

Recessing, sometimes called channeling or cambering, is the process of cutting a groove inside of a drilled, bored, or reamed hole. Recesses (Figure 7-103) are usually machined to provide room for the tool runout needed for subsequent operations such as internal threading.

A boring bar and holder may be used as a recessing tool, since recessing tools have the same tool angles and are similar in shape to boring tools. A high-speed steel cutting tool bit, ground with a square nose, makes a satisfactory tool for cutting small chambers (Figure 7-103). The sides of the tool bit taper in from the cutting edge so that the nose of the tool is the widest part. The tool bit must extend from the holder a distance slightly greater than the depth of the chamber to prevent the holder from rubbing the bore of the work.

Machining a Recess

To cut a recess, set up the lathe as in a boring operation. Reference the face of the tool bit to the face of the work; then move the tool bit forward the required distance to the recess by using the micrometer stop or by using the compound rest graduated collar. The compound rest must be set parallel with the ways of the bed for this method. Add the width of the tool bit into the measurement or the recess will not be cut correctly. Position A (Figure 7-103) is the tool aligning to the work, position B is set over to the front shoulder of the recess, and position C is the set over to the back of the recess. Use the cross slide graduated collar to measure the distance to move the tool bit toward the operator. inside of the hole. Spindle speed may have to be reduced due to the shape of the tool bit causing chatter on the work. After cutting the recess, use inside calipers to check the diameter.

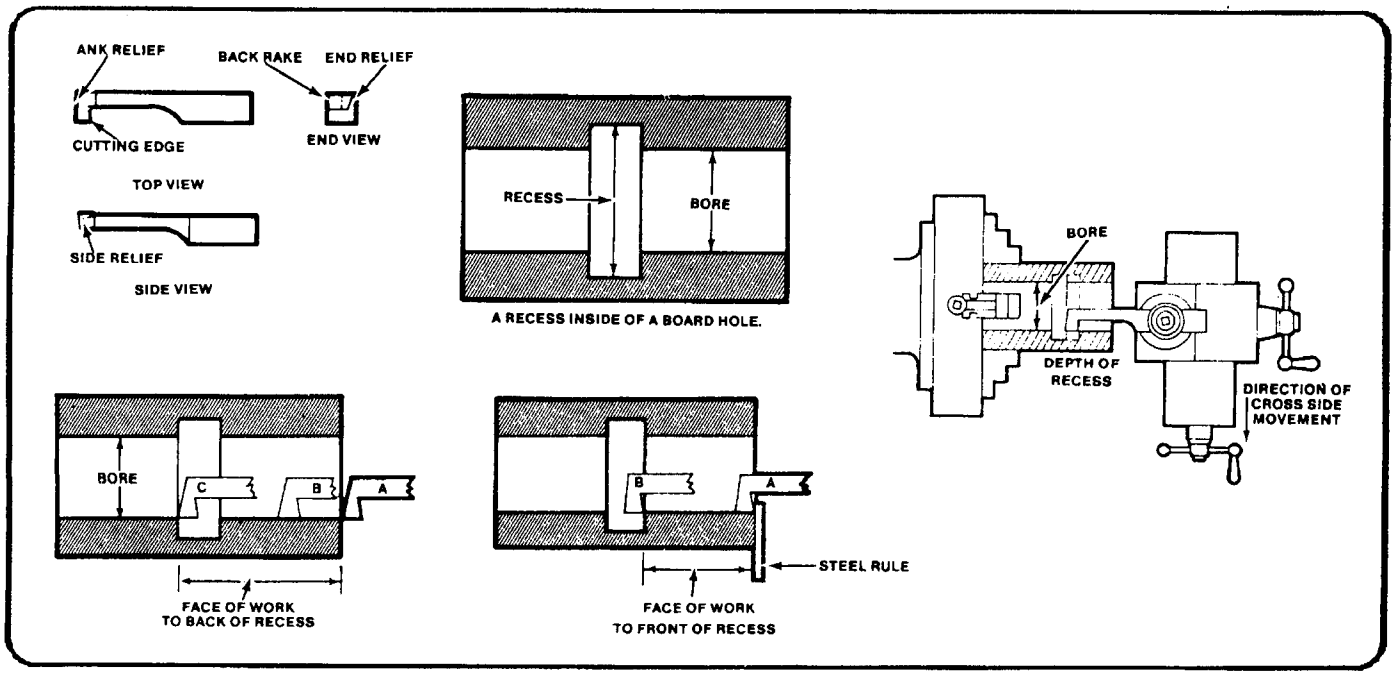

Figure 7-103. Recessing.

LATHE TOOL POST GRINDER

General

The tool post grinder is a portable grinding machine that can be mounted on the compound rest of a lathe in place of the tool post. It can be used to machine work that is too hard to cut by ordinary means or to machine work that requires a very fine finish. Figure 7-29 shows a typical tool post grinder. The grinder must be set on center, as shown in Figure 7-104. The centering holes located on the spindle shaft are used for this purpose. The grinding wheel takes the place of a lathe cutting tool. It can perform most of the operations that a cutting tool is capable of performing. cylindrical, tapered, and internal surfaces can be ground with the tool post grinder. Very small grinding wheels are mounted on tapered shafts known as quills to grind internal surfaces.

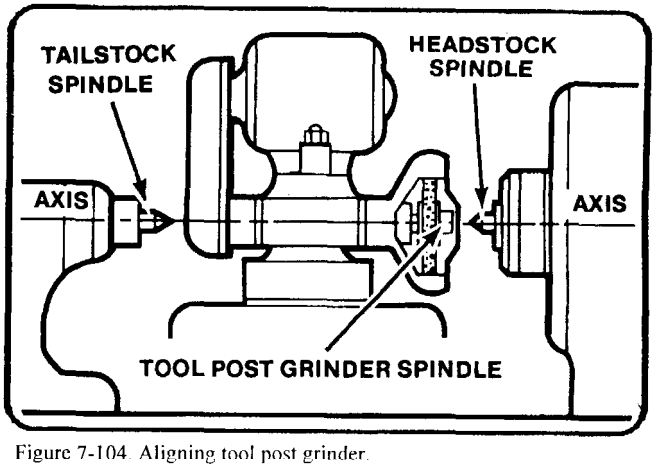

Figure 7-104. Aligning tool post grinder.

Selection of Grinding Wheels and Speeds

The grinding wheel speed is changed by using various sizes of pulleys on the motor and spindle shafts. An instruction plate on the grinder gives both the diameter of the pulleys required to obtain a given speed and the maximum safe speed for grinding wheels of various diameters. Grinding wheels are safe for operation at a speed just below the highest recommended speed. A higher than recommended speed may cause the wheel to disintegrate. For this reason, wheel guards are furnished with the tool post grinder to protect against injury. Always check the pulley combinations given on the instruction plate of the grinder when you mount a wheel. Be sure that the combination is not reversed, because this may cause the wheel to run at a speed far in excess of that recommended. During all grinding operations, wear goggles to protect your eyes from flying abrasive material.

Dressing the Grinding Wheel

The grinding wheel must be dressed and trued. Use a diamond wheel dresser to dress and true the wheel. The dresser is held in a holder that is clamped to the drive plate. Set the point of the diamond at center height and at a 10° to 15° angle in the direction of the grinding wheel rotation. The 10° to 15° angle prevents the diamond from gouging the wheel. Lock the lathe spindle by placing the spindle speed control lever in the low RPM position.

NOTE: The lathe spindle does not revolve when you are dressing the grinding wheel.

Remove the diamond dresser holder as soon as the dressing operation is completed. Bring the grinding wheel in contact with the diamond by carefully feeding the cross slide by hand. Move the wheel clear of the diamond and make a cut by means of the cross slide. The maximum depth of cut is 0.002 inch. Move the wheel slowly by hand back and forth over the point of the diamond. Move the carriage if the face of the wheel is parallel to the way of the lathe. Move the compound rest if the face of the wheel is at an angle. Make the final depth of cut of 0.0005 inch with a slow, even feed to obtain a good wheel finish.

Before you begin the grinding operation, cover the ways with a heavy piece of paper or use a shallow pan of water placed on the ways to collect the grinding dust that will accumulate from the grinding. This is to ensure none of the grinding burns to the ways or gets under the carriage which will cause the lathe premature wear. If you use a piece of paper, pay close attention that the sparks from the grinding operation do not cause the paper to ignite. If you use a shallow pan of water, make sure water is not spilled on the ways of the lathe. After all grinding operations, thoroughly clean and oil the lathe to remove any grinding dust that the paper pan of water missed.

Grinding Feeds, Speeds, and Depth of Cuts

Rotate the work at a fairly low speed during the grinding operations. The recommended surface foot speed is 60 to 100 FPM. The depth of cut depends upon the hardness of the work, the type of grinding wheel, and the desired finish.

Never take grinding cuts deeper than 0.002 inch Use a fairly low rate of feed, You will soon be able to judge whether the feed should be increased or decreased. Never stop the rotation of the work or the grinding wheel while they are in contact with each other.

Marking Position of Lathe Centers

Tool post grinders are often used to refinish damaged lathe centers. If the lathe is to be used for turning between centers in the near future, grind the tailstock center first, then the headstock center. Leave the headstock center in position for the turning operation. This method provides the greatest degree of accuracy. If you must remove the headstock center in order to perform other operations, marks placed on the headstock center, the sleeve, and the center will enable you to install them in the same position they were in when the center was ground. This will ensure the greatest degree of accuracy for future operations involving turning work between centers.

Setup for Grinding Lathe Centers

To refinish a damaged lathe center, you should first install headstock and tailstock centers after ensuring that the spindle holes, drill sleeves, and centers are clean and free of burrs. Next, position the compound rest parallel to the ways; then, mount the tool post grinder on the compound rest. Make sure that the grinding wheel spindle is at center height and aligned with the lathe centers. Move the compound rest 30° to the right of the lathe spindle axis, as shown in Figure 7-40. Mount the wheel dresser, covering the ways and carriage with rags to protect them from abrasive particles. Wear goggles to protect your eyes.

Grinding Lathe Centers

Start the grinding motor. Turn it on and off alternately, but let it run a bit longer each time, until the abrasive wheel is brought up to top speed. Dress the wheel, feeding the grinder with the compound rest. Then move the grinder clear of the headstock center and remove the wheel dresser. Set the lathe for the desired spindle speed and engage the spindle. Pick up the surface of the center. Take a light depth of cut and feed the grinder back and forth with the compound rest. Do not allow the abrasive wheel to feed entirely off the center. Continue taking additional cuts until the center cleans up. To produce a good finish, reduce the feed rate and the depth of cut to 0.0005. Grind off the center's sharp point, leaving a flat with a diameter about 1/32 inch. Move the grinder clear of the headstock and turn it off.

MILLING ON THE LATHE

Milling operations may be performed on the lathe by using the Versa-Mil, which is discussed in Chapter 9, and by using the lathe milling fixture. The lathe milling fixture complements the Versa-Mil and adds to the basic capabilities of the machine shop. If the Versa-Mil is out of action or being used for another job, many milling operations can still be accomplished by using the milling fixture (Figure 7-105). Capabilities, functions, and uses are outlined in the appropriate operator's manual, either TM 9-3465-200-10 or TM 9-3465-201-10.

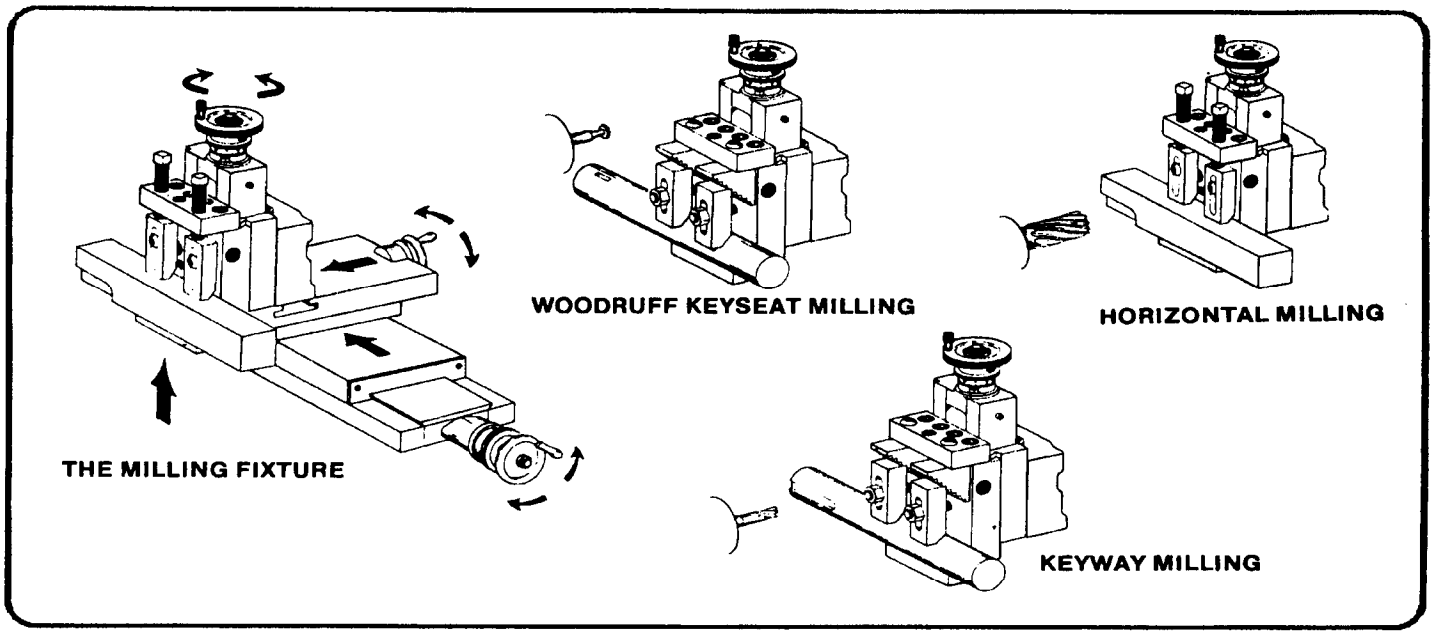

Figure 7-105. Lathe milling fixture operations.

USING MICROMETER CARRIAGE STOP

The micrometer carriage stop, shown in Figure 7-28, is used to accurately position the lathe carriage. Move the carriage so that the cutting tool is approximately positioned. Clamp the micrometer carriage stop to the ways of the lathe, with the spindle in contact with the carriage. The spindle of the micrometer carriage stop can be extended or retracted by means of the knurled adjusting collar. The graduations on the collar, which indicate movement in thousandths of an inch, make it possible to set the spindle accurately. Next, bring the carriage in contact with the micrometer spindle again. The carriage can be accurately positioned within 0.001 inch. This is very useful when you are facing work to length, machining shoulders to an exact length, or accurately spacing internal and external grooves. After making a cut, bring the tool back to the start of the cut by means of the carriage stop. This feature is very useful when you must remove a tool, such as the internal recessing tool, from the hole to take measurements and then reposition it to take additional cuts. Always bring the carriage into contact with the stop by hand. Use power feed to bring the carriage within 1/32 inch of the stop. Move the carriage by hand the remaining distance.

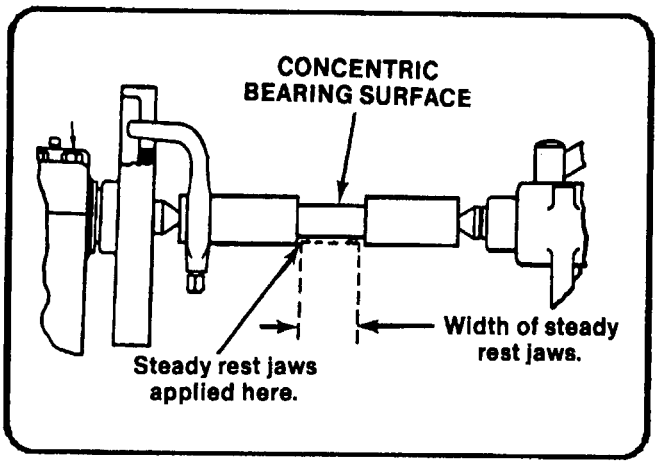

Figure 7-106. Using the steady rest.

USING STEADY AND FOLLOWER RESTS

General

The steady rest consists of a frame and three adjustable jaws which support the work, as shown in Figure 7-27. One purpose of the steady rest is to prevent springing or deflection of slender, flexible work; another is to furnish auxiliary support for the work to permit heavy cuts to be made; a third is to support work for drilling, boring, or internal threading. The over arm containing the top jaw can be unfastened and swung out of the way so that identical pieces can be removed and replaced without adjusting the jaws.

Bearing Surface

A bearing surface must be provided for the steady rest jaws. The bearing surface is usually machined directly on the work, as shown in Figure 7-106. When the work is too small in diameter to machine the bearing surface or shaped so that it would be impractical to machine one, you can use a cathead to provide the bearing surface. The cathead shown in Figure 7-27, has a bearing you surface, a hole through, which the work extends, and adjusting screws. The adjusting screws fasten the cathead to the work. They are also used to align the bearing surface so can use a cathead to provide the bearing surface so that t is concentric to the work axis. Use a dial indicator to ensure concentricity.

Setting up the Steady Rest

To setup the rest, first machine and polish the portion of the work that is to be used as the bearing surface. Clean the portion of the ways where the steady rest is to be mounted, place the steady rest on the ways and clamp loosely. Open the top of the steady rest and place the workpiece in the chuck with the bearing surface over the adjustable jaws. Clamp the steady rest securely to the ways. Close the top of the steady rest and adjust the jaws to the workpiece. There should be 0.001 inch clearance between the jaws and the workpiece. Tighten the locking screws on the adjustable jaws. Lubricate the bearing surface generously with a heavy oil before turning the lathe on. Proceed with the machining operation Continuously watch the bearing surface and the adjustable jaws to ensure a film of heavy oil is between them. As the machining operation continues, also check the bearing surface and adjustable jaws as when the workpiece heats up it will expand, closing the distance between the jaws and the workpiece.

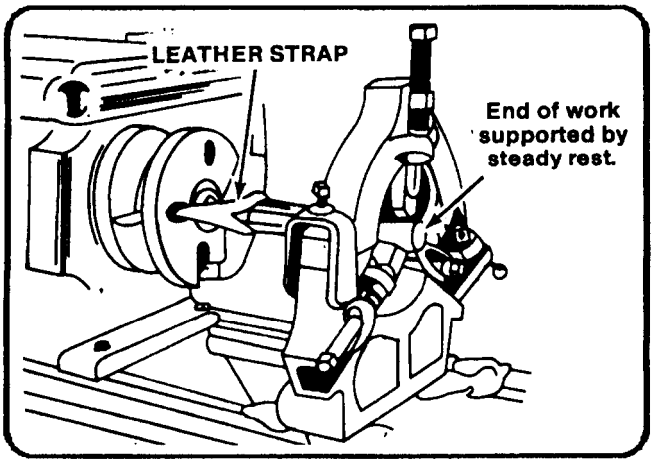

Figure 7-107. Tying the lathe dog.

Using Steady Rest with Headstock Center

When it is not possible to hold the work in the chuck, you can machine with one end supported by the headstock center and the other end supported by the steady rest. Use a leather strap or rawhide thong to tie the work to the driveplate and to prevent it from moving off the headstock center, as shown in Figure 7-107. Mount the work between centers and machine the bearing surface. Set up the steady rest. With the work mounted between the centers, tie the lathe dog, then remove the tailstock center and perform the necessary machining,

Using the Follower Rest

Long slender shafts that tend to whip and spring while they are being machined require the use of a follower rest (Figure 7-27). The follower rest is fastened to the carriage and moves with the cutting tool. The upper jaw prevents the work from climbing the cutting tool, The lower jaw prevents the work from springing away from the cutting tool The follower rest jaws are adjusted in the same manner as steady rest jaws. The follower rest is often used when long, flexible shafts are threaded, as shown in Figure 7-108, At the completion of each threading cut, remove any burrs that may have formed to prevent them from causing the work to move out of alignment.

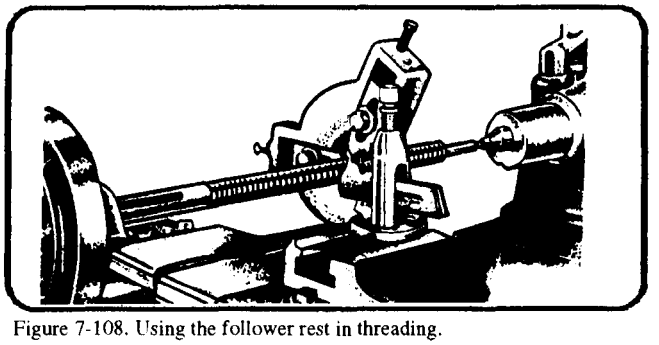

Figure 7-108. Using the follower rest in threading.

Chapter 8

MILLING OPERATIONS

Milling is the process of machining flat, curved, or irregular surfaces by feeding the workpiece against a rotating cutter containing a number of cutting edges. The milling machine consists basically of a motor driven spindle, which mounts and revolves the milling cutter, and a reciprocating adjustable worktable, which mounts and feeds the workpiece.

Milling machines are basically classified as vertical or horizontal. These machines are also classified as knee-type, ram-type, manufacturing or bed type, and planer-type. Most milling machines have self-contained electric drive motors, coolant systems, variable spindle speeds, and power-operated table feeds

TYPES OF MILLING MACHINES

KNEE-TYPE MILLING MACHINE

Knee-type milling machines are characterized by a vertically adjustable worktable resting on a saddle which is supported by a knee. The knee is a massive casting that rides vertically on the milling machine column and can be clamped rigidly to the column in a position where the milling head and milling machine spindle are properly adjusted vertically for operation.

The plain vertical machines are characterized by a spindle located vertically, parallel to the column face, and mounted in a sliding head that can be fed up and down by hand or power. Modern vertical milling machines are designed so the entire head can also swivel to permit working on angular surfaces,

The turret and swivel head assembly is designed for making precision cuts and can be swung 360° on its base. Angular cuts to the horizontal plane may be made with precision by setting the head at any required angle within a 180” arc.

The plain horizontal milling machine’s column contains the drive motor and gearing and a fixed position horizontal milling machine spindle. An adjustable overhead arm containing one or more arbor supports projects forward from the top of the column. The arm and arbor supports are used to stabilize long arbors. Supports can be moved along the overhead arm to support the arbor where support is desired depending on the position of the milling cutter or cutters.

The milling machine’s knee rides up or down the column on a rigid track. A heavy, vertical positioning screw beneath past the milling cutter. The milling machine is excellent for forming flat surfaces, cutting dovetails and keyways, forming and fluting milling cutters and reamers, cutting gears, and so forth. Many special operations can be performed with the attachments available for milling machine use.the knee is used for raising and lowering. The saddle rests upon the knee and supports the worktable. The saddle moves in and out on a dovetail to control cross feed of the worktable. The worktable traverses to the right or left upon the saddle for feeding the workpiece past the milling cutter. The table may be manually controlled or power fed.

UNIVERSAL HORIZONTAL MILLING MACHINE

The basic difference between a universal horizontal milling machine and a plain horizontal milling machine is the addition of a table swivel housing between the table and the saddle of the universal machine. This permits the table to swing up to 45° in either direction for angular and helical milling operations. The universal machine can be fitted with various attachments such as the indexing fixture, rotary table, slotting and rack cutting attachments, and various special fixtures.

RAM-TYPE MILLING MACHINE

The ram-type milling machine is characterized by a spindle mounted to a movable housing on the column to permit positioning the milling cutter forward or rearward in a horizontal plane. Two popular ram-type milling machines are the universal milling machine and the swivel cutter head ram-type milling machine.

UNIVERSAL RAM-TYPE MILLING MACHINE

The universal ram-type milling machine is similar to the universal horizontal milling machine, the difference being, as its name implies, the spindle is mounted on a ram or movable housing.

SWIVEL CUTTER HEAD RAM-TYPE MILLING MACHINE

The cutter head containing the milling machine spindle is attached to the ram. The cutter head can be swiveled from a vertical spindle position to a horizontal spindle position or can be fixed at any desired angular position between vertical and horizontal. The saddle and knee are hand driven for vertical and cross feed adjustment while the worktable can be either hand or power driven at the operator's choice.

Basic milling machine configurations are shown in Figure 8-1.

SAFETY RULES FOR MILLING MACHINES

Milling machines require special safety precautions while being used. These are in addition to those safety precautions described in Chapter 1.

- Do not make contact with the revolving cutter.
- Place a wooden pad or suitable cover over the table surface to protect it from possible damage.
- Use the buddy system when moving heavy attachments.

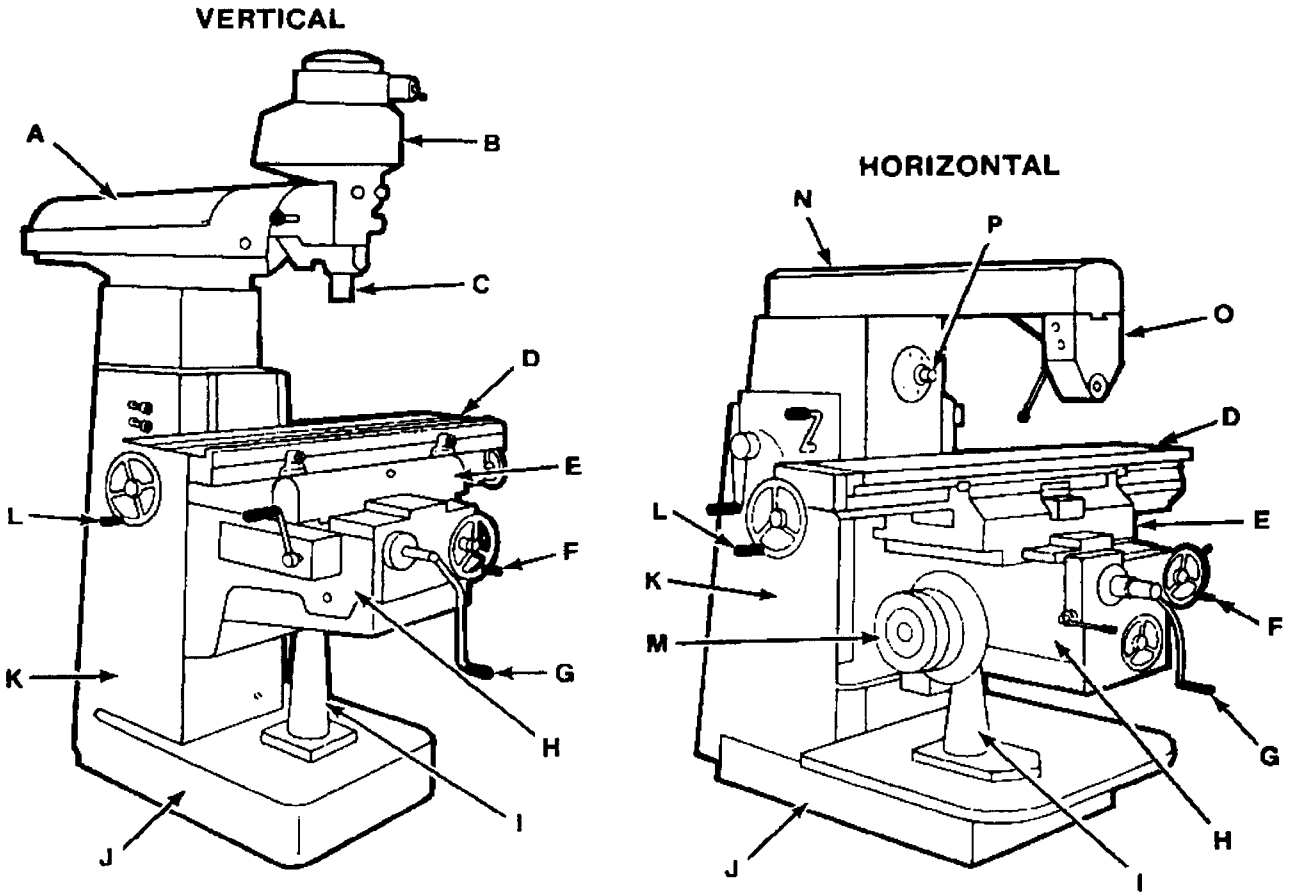

A RAM
B VERTICAL HEAD
C QUILL
D TABLE
E SADDLE
F CROSSFEED HANDLE
G VERTICAL FEED CRANK
H KNEE
I VERTICAL POSITIONING SCREW
J BASE
K COLUMN
L TABLE HANDWHEEL
M TABLE TRANSMISSION
N RAM TYPE OVERARM
O ARBOR SUPPORT
P SPINDLE

Figure 8-1. Milling machines.

- Do not attempt to tighten arbor nuts using machine power.
- When installing or removing milling cutters, always hold them with a rag to prevent cutting your hands.
- While setting up work, install the cutter last to avoid being cut.
- Never adjust the workpiece or work mounting devices when the machine is operating.
- Chips should be removed from the workpiece with an appropriate rake and a brush.

NOTE Chip rake should be fabricated to the size of the T-slots (Figure 8-2).

- Shut the machine off before making any adjustments or measurements.
- When using cutting oil, prevent splashing by using appropriate splash guards. Cutting oil on the floor can cause a slippery condition that could result in operator injury

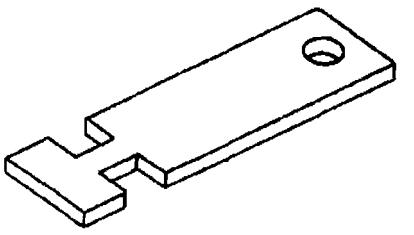

Figure 8-2. Chip rake.

TOOLS AND EQUIPMENT

MILLING CUTTERS

Classification of Milling Cutters

Milling cutters are usually made of high-speed steel and are available in a great variety of shapes and sizes for various purposes. You should know the names of the most common classifications of cutters, their uses, and, in a general way, the sizes best suited to the work at hand.

Milling Cutter Nomenclature

Figure 8-3 shows two views of a common milling cutter with its parts and angles identified. These parts and angles in some form are common to all cutter types.

- The pitch refers to the angular distance between like or adjacent teeth.

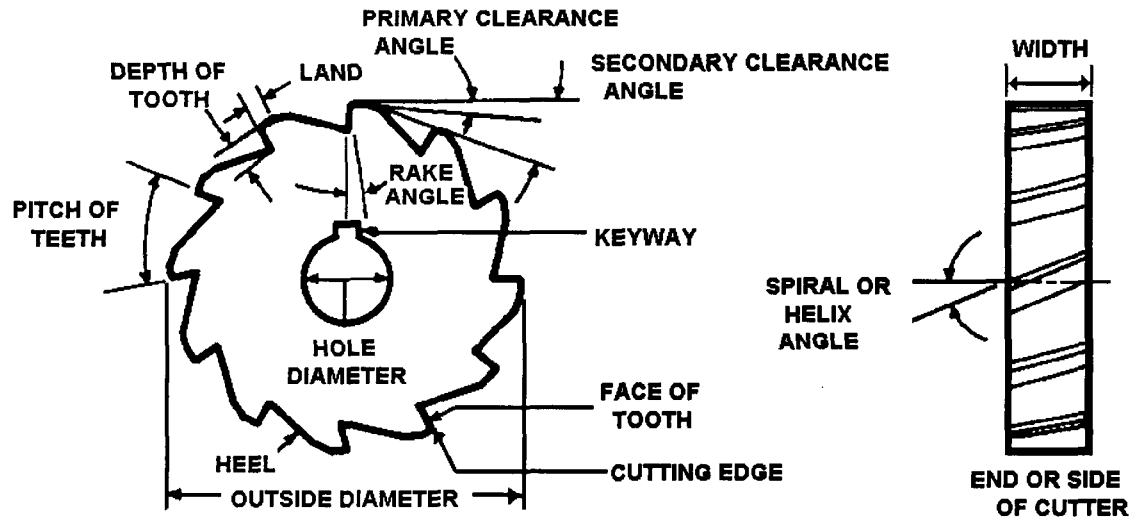

Figure 8-3. Milling cutter nomenclature.

- The pitch is determined by the number of teeth. The tooth face is the forward facing surface of the tooth that forms the cutting edge.
- The cutting edge is the angle on each tooth that performs the cutting.
- The land is the narrow surface behind the cutting edge on each tooth.
- The rake angle is the angle formed between the face of the tooth and the centerline of the cutter. The rake angle defines the cutting edge and provides a path for chips that are cut from the workpiece.
- The primary clearance angle is the angle of the land of each tooth measured from a line tangent to the centerline of the cutter at the cutting edge. This angle prevents each tooth from rubbing against the workpiece after it makes its cut.
- This angle defines the land of each tooth and provides additional clearance for passage of cutting oil and chips.
- The hole diameter determines the size of the arbor necessary to mount the milling cutter.
- Plain milling cutters that are more than 3/4 inch in width are usually made with spiral or helical teeth. A plain spiral-tooth milling cutter produces a better and smoother finish and requires less power to operate. A plain helical-tooth milling cutter is especially desirable when milling an uneven surface or one with holes in it.

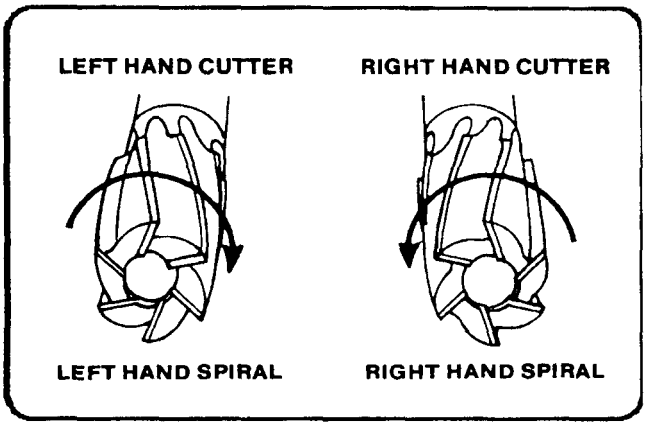

Figure 8-4. Left and right cutters

Types of Teeth

The teeth of milling cutters may be made for right-hand or left-hand rotation, and with either right-hand or left-hand helix. Determine the hand of the cutter by looking at the face of the cutter when mounted on the spindle. A right-hand cutter must rotate counterclockwise; a left-hand cutter must rotate clockwise. The right-hand helix is shown by the flutes leading to the right; a left-hand helix is shown by the flutes leading to the left. The direction of the helix does not affect the cutting ability of the cutter, but take care to see that the direction of rotation is correct for the hand of the cutter (Figure 8-4).

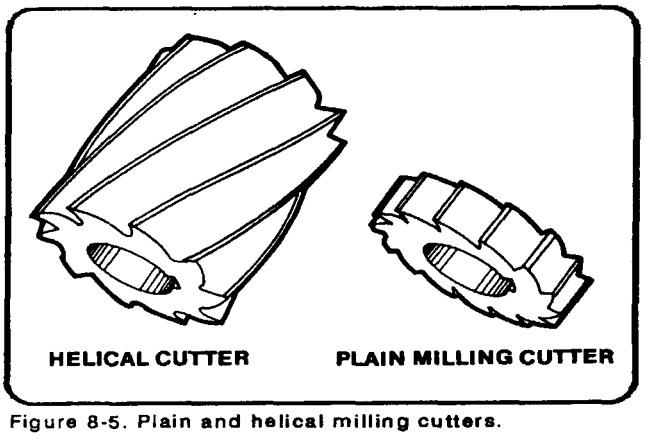

Figure 8-5. Plain and helical milling cutters.

Saw Teeth

Saw teeth similar to those shown in Figure 8-3 are either straight or helical in the smaller sizes of plain milling cutters, metal slitting saw milling cutters, and end milling cutters. The cutting edge is usually given about 5 degrees primary clearance. Sometimes the teeth are provided with off-set nicks which break up chips and make coarser feeds possible.

Helical Milling Cutters

The helical milling cutter is similar, to the plain milling cutter, but the teeth have a helix angle of 45° to 60°. The steep helix produces a shearing action that results in smooth, vibration-free cuts. They are available for arbor mounting, or with an integral shank with or without a pilot. This type of helical cutter is particularly useful for milling elongated slots and for light cuts on soft metal. See Figure 8-5.

Metal Slitting Saw Milling Cutter

The metal slitting saw milling cutter is essentially a very thin plain milling cutter. It is ground slightly thinner toward the center to provide side clearance. These cutters are used for cutoff operations and for milling deep, narrow slots, and are made in widths from 1/32 to 3/16 inch.

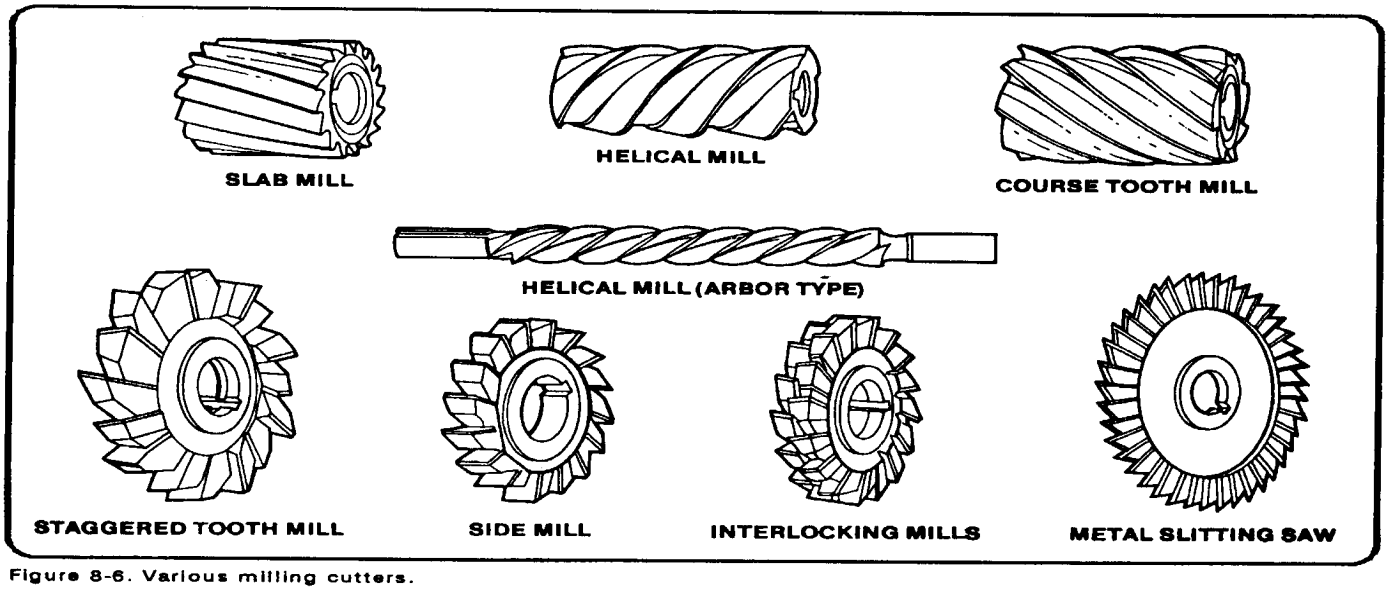

Figure 8-6. Various milling cutters.

Side Milling Cutters

Side milling cutters are essentially plain milling cutters with the addition of teeth on one or both sides. A plain side milling cutter has teeth on both sides and on the periphery. When teeth are added to one side only, the cutter is called a half-side milling cutter and is identified as being either a right-hand or left-hand cutter. Side milling cutters are generally used for slotting and straddle milling.

Interlocking tooth side milling cutters and staggered tooth side milling cutters are used for cutting relatively wide slots with accuracy (Figure 8-6). Interlocking tooth side milling cutters can be repeatedly sharpened without changing the width of the slot they will machine.

After sharpening, a washer is placed between the two cutters to compensate for the ground off metal. The staggered tooth cutter is the most washer is placed between the two cutters to compensate for efficient type for milling slots where the depth exceeds the width.

End Milling Cutters

The end milling cutter, also called an end mill, has teeth on the end as well as the periphery. The smaller end milling cutters have shanks for chuck mounting or direct spindle mounting. End milling cutters may have straight or spiral flutes. Spiral flute end milling cutters are classified as left-hand or right-hand cutters depending on the direction of rotation of the flutes. If they are small cutters, they may have either a straight or tapered shank.

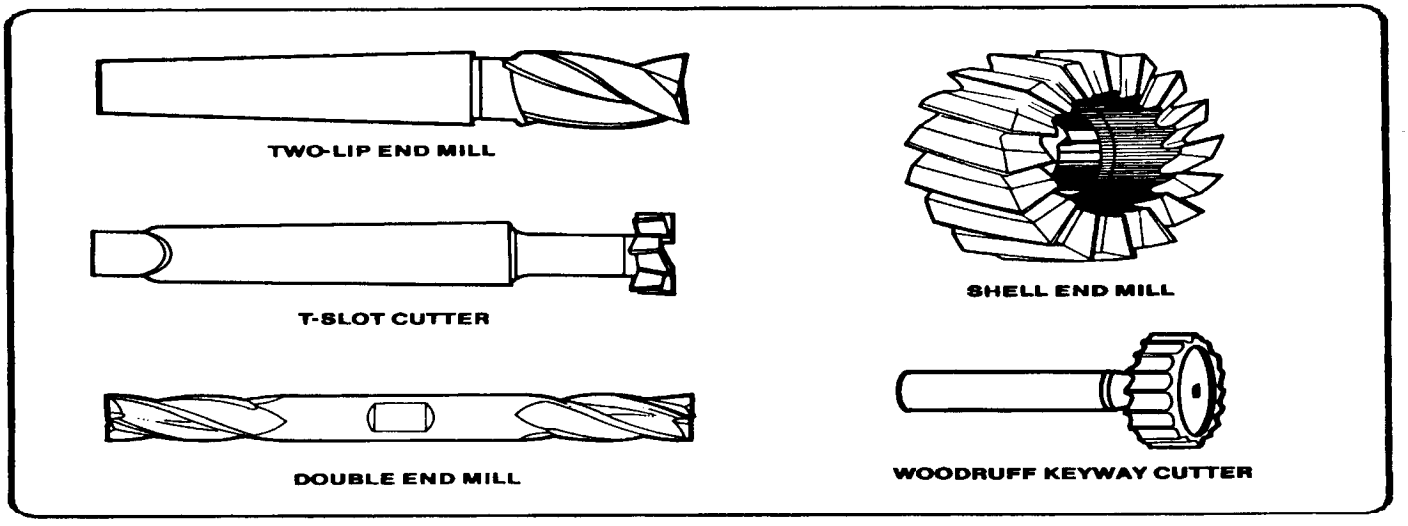

Figure 8-7. End mill, T-slot, and Woodruff keyway cutters.

The most common end milling cutter is the spiral flute cutter containing four flutes. Two-flute end milling cutters, sometimes referred to as two-lip end mill cutters, are used for milling slots and keyways where no drilled hole is provided for starting the cut. These cutters drill their own starting holes. Straight flute end milling cutters are generally used for milling both soft or tough materials, while spiral flute cutters are used mostly for cutting steel.

Large end milling cutters (normally over 2 inches in diameter) (Figure 8-10) are called shell end mills and are recessed on the face to receive a screw or nut for mounting on a separate shank or mounting on an arbor, like plain milling cutters. The teeth are usually helical and the cutter is used particularly for face milling operations requiring the facing of two surfaces at right angles to each other.

T-Slot Milling Cutter

The T-slot milling cutter is used to machine T-slot grooves in worktables, fixtures, and other holding devices. The cutter has a plain or side milling cutter mounted to the end of a narrow shank. The throat of the T-slot is first milled with a side or end milling cutter and the headspace is then milled with the T-slot milling cutter.

Woodruff Keyslot Milling Cutters

The Woodruff keyslot milling cutter is made in straight, tapered-shank, and arbor-mounted types. See Figure 8-7. The most common cutters of this type, under 1 1/2 inches in diameter, are provided with a shank. They have teeth on the periphery and slightly concave sides to provide clearance. These cutters are used for milling semicylindrical keyways in shafts.

Angle Milling Cutters

The angle milling cutter has peripheral teeth which are neither parallel nor perpendicular to the cutter axis. See Figure 8-8. Common operations performed with angle cutters are cutting V-notches and serration's. Angle cutters may be single-angle milling cutters or double-angle milling cutters. The single-angle cutter contains side-cutting teeth on the flat side of the cutter. The angle of the cutter edge is usually 30°, 45°, or 60°, both right and left. Double-angle cutters have included angles of 45, 60, and 90 degrees.

Gear Hob

The gear hob is a formed tooth milling cutter with helical teeth arranged like the thread on a screw. These teeth- are fluted to produce the required cutting edges. Hobs are generally used for such work as finishing spur gears, spiral gears, and worm gears. They may also be used to cut ratchets and spline shafts.

Concave and Convex Milling Cutters

Concave and convex milling cutters are formed tooth cutters shaped to produce concave and convex contours of 1/2 circle or less. The size of the cutter is specified by the diameter of the circular form the cutter produces.

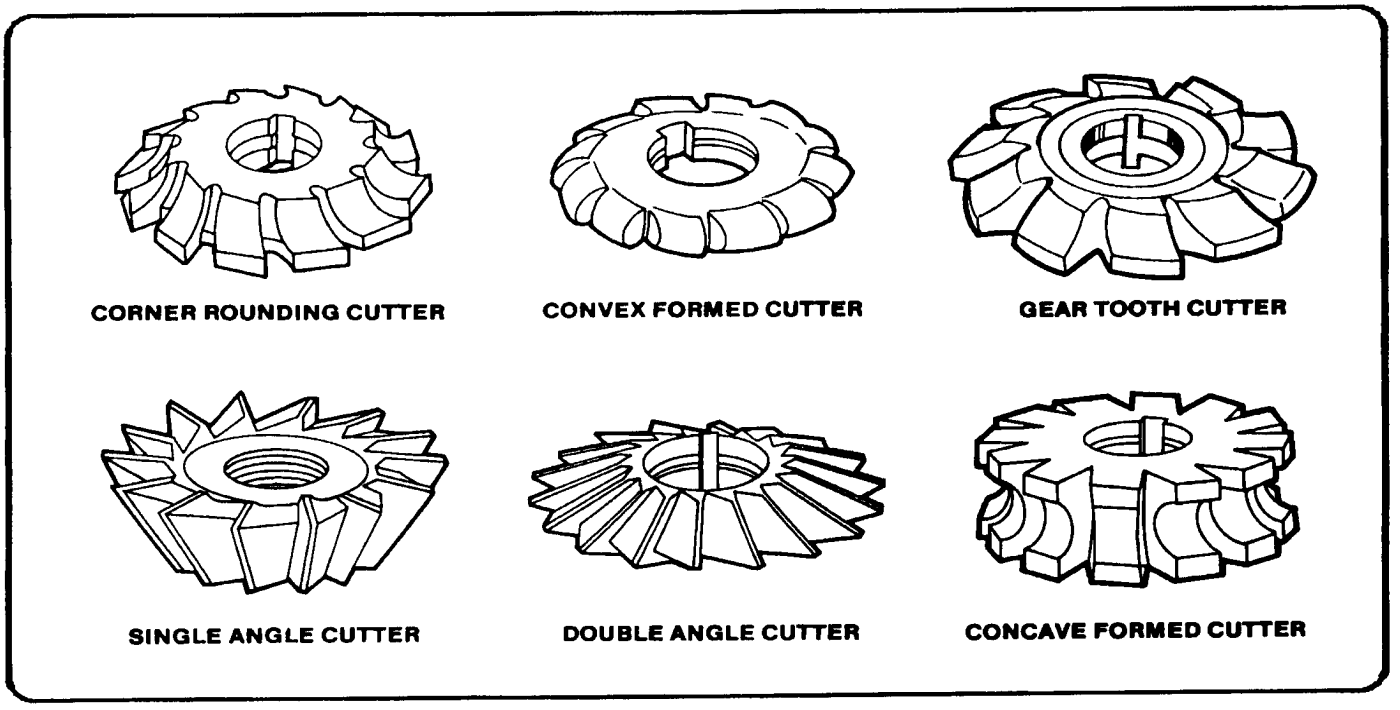

Figure 8-8. Angle, concave, convex, corner,and gear cutters.

Corner Rounding Milling Cutter

The corner-rounding milling cutter is a formed tooth cutter used for milling rounded corners on workplaces up to and including one-quarter of a circle. The size of the cutter is specified by the radius of the circular form the cutter produces, such as concave and convex cutters generally used for such work as finishing spur gears, spiral gears, and worm wheels. They may also be used to cut ratchets and spline shafts.

Special Shaped-Formed Milling Cutter

Formed milling cutters have the advantage of being adaptable to any specific shape for special operations. The cutter is made specially for each specific job. In the field, a fly cutter is formed by grinding a single point lathe cutter bit for mounting in a bar, holder, or fly cutter arbor. The cutter can be sharpened many times without destroying its shape.

Selection of Milling Cutters

Consider the following when choosing milling cutters:

- High-speed steel, stellite, and cemented carbide cutters have a distinct advantage of being capable of rapid production when used on a machine that can reach the proper speed.
- 45° angular cuts may either be made with a 45° single-angle milling cutter while the workpiece is held in a swivel vise, or with an end milling cutter while the workpiece is set at the required angle in a universal vise.
- The harder the material, the greater will be the heat that is generated in cutting. Cutters should be selected for their heat-resisting properties,
- Use a coarse-tooth milling cutter for roughing cuts and a finer-toothed milling cutter for light cuts and finishing operations.
- When milling stock to length, the choice of using a pair of side milling cutters to straddle the workpiece, a single-side milling cutter, or an end milling cutter will depend upon the number of pieces to be cut.
- Some operations can be done with more than one type of cutter such as in milling the square end on a shaft or reamer shank. In this case, one or two side milling cutters, a fly cutter, or an end milling cutter may be used. However, for the majority of operations, cutters are specially designed and named for the operation they are to accomplish.

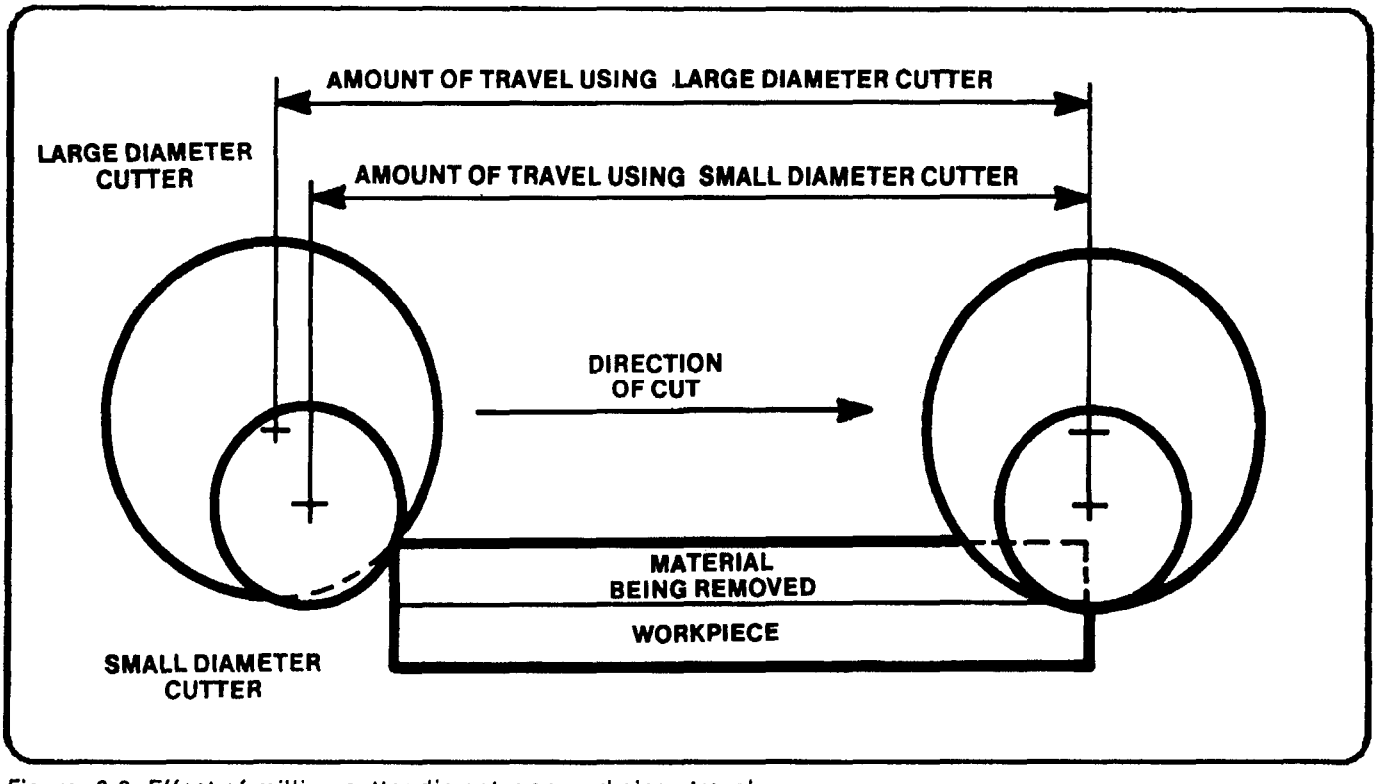

Figure 8-9. Effect of milling cutter diameter on workpiece travel.

- The milling cutter should be small enough in diameter so that the pressure of the cut will not cause the workpiece to be sprung or displaced while being milled.

Size of Milling Cutter

- In selecting a milling cutter for a particular job, choose one large enough to span the entire work surface so the job can be done with a single pass. If this cannot be done, remember that a small diameter cutter will pass over a surface in a shorter time than a large diameter cutter which is fed at the same speed. This fact is illustrated in Figure 8-9.

Care and Maintenance of Milling Cutters

- The life of a milling cutter can be greatly prolonged by intelligent use and proper storage. General rules for the care and maintenance of milling cutters are given below.
- New cutters received from stock are usually wrapped in oil paper which should not be removed until the cutter is used.
- Take care to operate the machine at the proper speed for the cutter being used, as excessive speed will cause the cutter to wear rapidly from overheating.
- Take care to prevent the cutter from striking the hard jaws of the vise, chuck, clamping bolts, or nuts.
- Whenever practical, use the proper cutting oil on the cutter and workpiece during operations, since lubrication helps prevent overheating and cutter wear.
- Keep cutters sharp. Dull cutters require more power to drive and this power, being transformed into heat, softens the cutting edges. Dull cutters should be marked as such and set aside for grinding. For further information on cutter grinding, refer to Chapter 5, Grinding Machines.
- Thoroughly clean and lightly coat milling cutters with oil before storing.
- Place cutters in drawers or bins so that their cutting edges will not strike each other. Hang small cutters on hooks or pegs, and set large cutters on end. Place taper and straight shank cutters in separate drawers, bins, or racks provided with suitable sized holes to receive the shanks.
- Never operate a cutter backwards. Due to the clearance angle, the cutter will rub, producing a great deal of friction. Operating the cutter backward may result in cutter breakage.

ARBORS

Milling machine arbors are made in various lengths and in standard diameters of 7/8,1,1 1/4, and 1 1/2 inch. The shank is made to fit the taper hole in the spindle while the other end is threaded.

NOTE: The threaded end may have left or right-handed threads.

The milling machine spindle may be self-holding or self-releasing. The self-holding taper is held in the spindle by the high wedging force. The spindle taper in most milling machines is self-releasing; tooling must be held in place by a draw bolt extending through the center of the spindle.

Arbors are supplied with one of three tapers to fit the milling machine spindle: the Standard Milling Machine taper, the Brown and Sharpe taper, and the Brown and Sharpe taper with tang (Figure 8-10).

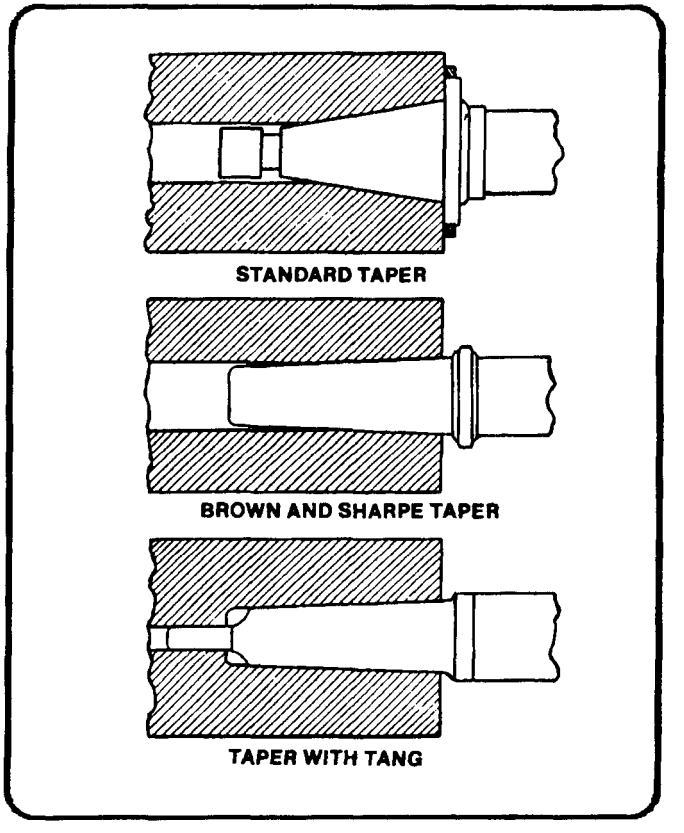

Figure 8-10. Tapers used for milling machine arbors.

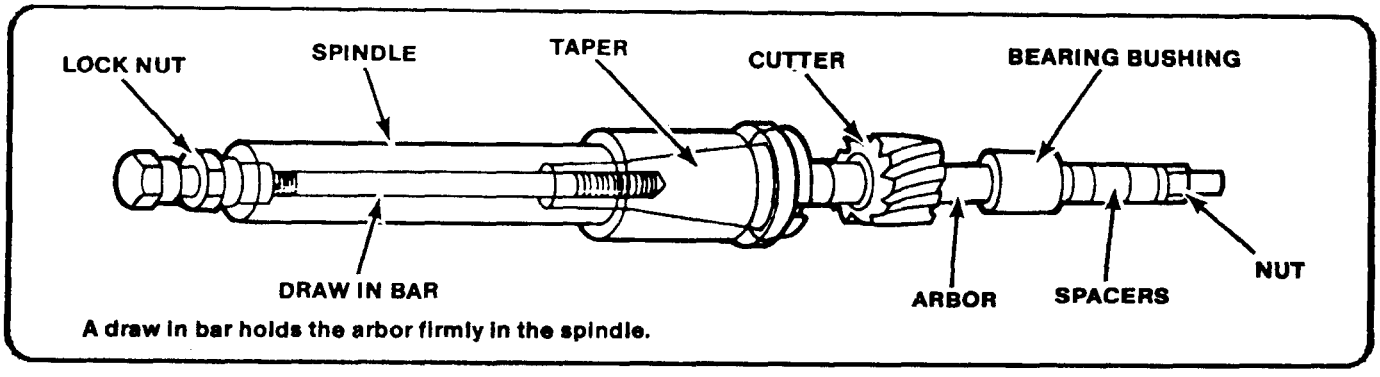

Figure 8-11. Standard milling machine arbor.

The Standard Milling Machine Taper is used on most machines of recent manufacture. See Figure 8-11. These tapers are identified by the number 30, 40, 50, or 60. Number 50 is the most commonly used size on all modern machines.

The Brown and Sharpe taper is found mostly on older machines. Adapters or collets are used to adapt these tapers to fit machines whose spindles have Standard Milling Machine tapers.

The Brown and Sharpe taper with tang is used on some older machines. The tang engages a slot in the spindle to assist in driving the arbor,

Standard Milling Machine Arbor

The standard milling machine arbor has a tapered, cylindrical shaft with a standard milling taper on the driving end and a threaded portion on the opposite end to receive the arbor nut. One or more milling cutters may be placed on the straight cylindrical portion of the arbor and held in position by sleeves and the arbor nut. The standard milling machine arbor is usually splined and keys are used to lock each cutter to the arbor shaft. These arbors are supplied in three styles, various lengths and, standard diameters.

The most common way to fasten the arbor in the milling machine spindle is to use a draw bar. The bar threads into the taper shank of the arbor to draw the taper into the spindle and hold it in place. Arbors secured in this manner are removed by backing out the draw bar and tapping the end of the bar to loosen the taper.

The end of the arbor opposite the taper is supported by the arbor supports of the milling machine. One or more supports reused depending on the length of the arbor and the degree of rigidity required. The end may be supported by a lathe center bearing against the arbor nut or by a bearing surface 0f the arbor fitting inside a bushing of the arbor support.

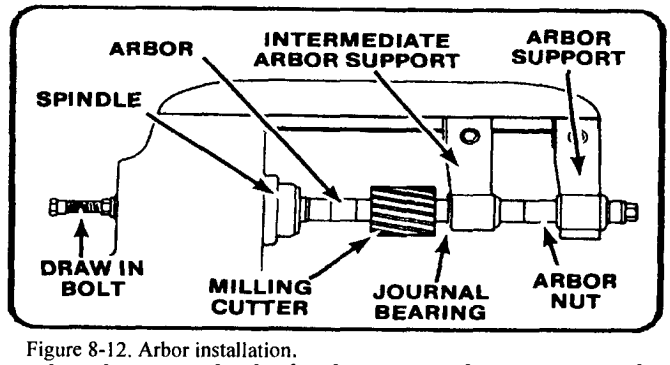

Figure 8-12. Arbor installation.

The arbor may also be firmly supported as it turns in the arbor support bearing suspended from the over-arm (Figure 8-12).

Typical milling arbors are illustrated in Figure 8-13. Listed on the next page are several types of Style C arbors.

Style A has a cylindrical pilot on the end that runs in a bronze bearing in the arbor support. This style is mostly used on small milling machines or when maximum arbor support clearance is required.

Style B is characterized by one or more bearing collars that can be positioned to any part of the arbor. This allows the bearing support to be positioned close to the cutter, to-obtain rigid setups in heavy duty milling operations).

Style C arbors are used to mount the smaller size milling cutters, such as end mills that cannot be bolted directly on the spindle nose. Use the shortest arbor possible for the work.

Screw Arbor

Screw arbors are used to hold small cutters that have threaded holes. See Figure 8-14. These arbors have a taper next to the threaded portion to provide alignment and support for tools that require a nut to hold them against a taper surface. A right-hand threaded arbor must be used for right-hand cutters while a left-hand threaded arbor is used to mount left-hand cutters.

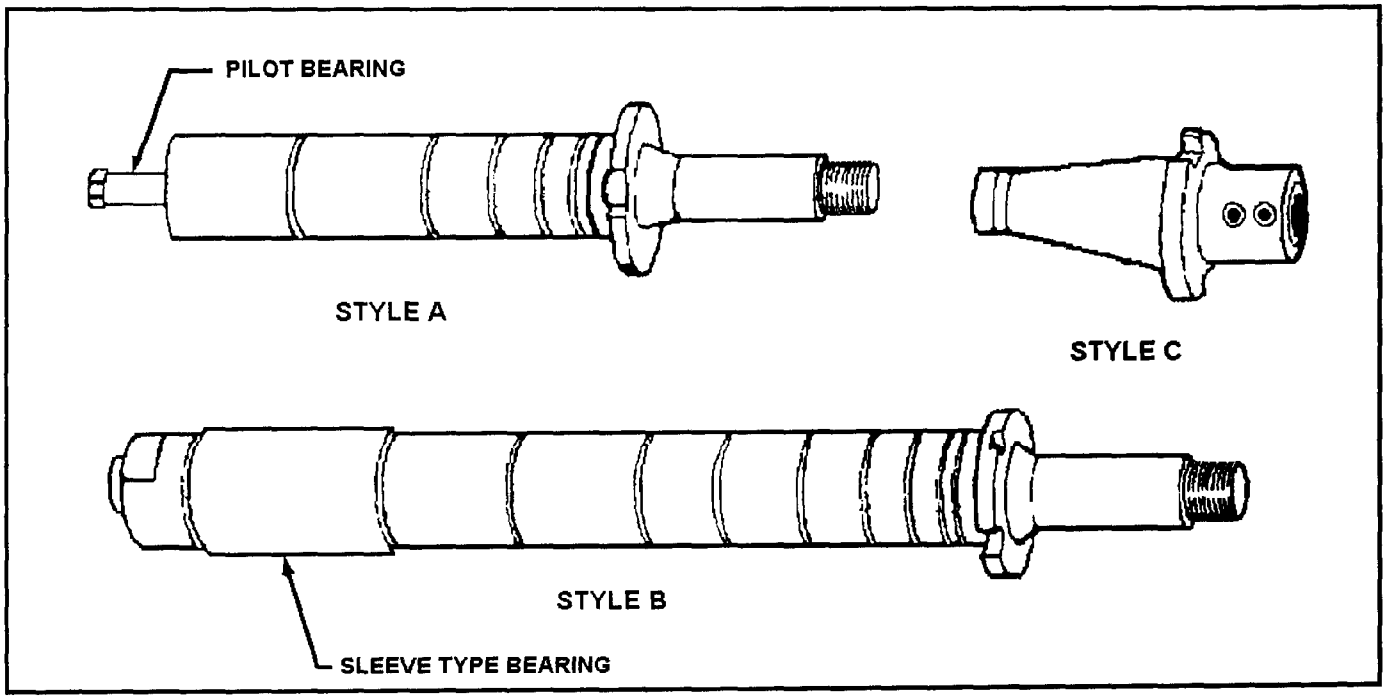

Figure 8-13. Typical milling arbors.

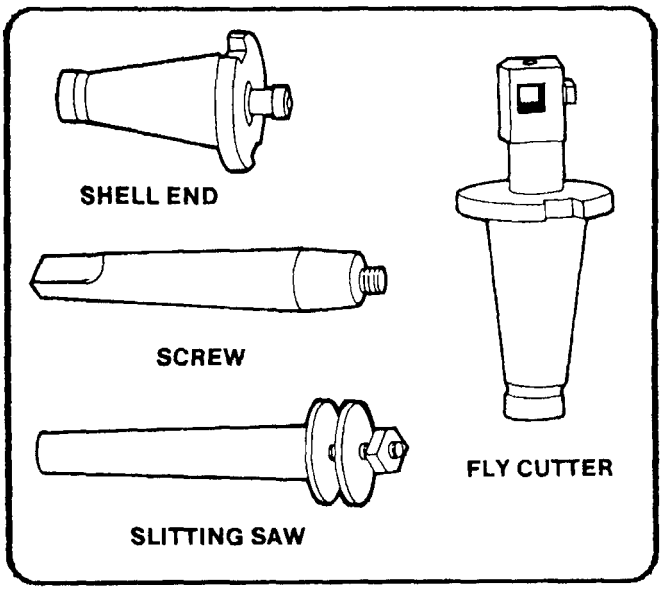

Figure 8-14. Arbor variations.

Screw arbors are used to hold small cutters that have threaded holes. These arbors have a taper next to the threaded portion to provide alignment and support for tools that require a nut to hold them against a taper surface. A right-hand threaded arbor must be used for right-hand cutters while a left-hand threaded arbor is used to mount left-hand cutters.

The slitting saw milling cutter arbor (Figure 8-14) is a short arbor having two flanges between which the milling cutter is secured by tightening a clamping nut. This arbor is used to hold metal slitting saw milling cutters used for slotting, slitting, and sawing operations.

The shell end milling cutter arbor has a bore in the end in which shell end milling cutters fit and are locked in place by means of a cap screw.

The fly cutter arbor is used to support a single-edge lathe, shaper, or planer cutter bit for boring and gear cutting operations on the milling machine.

COLLETS, SPINDLE ADAPTERS, AND QUICK-CHANGE TOOLING

Description

Milling cutters that contain their own straight or tapered shanks are mounted to the milling machine spindle with collets, spindle adapters, and quick-change tooling which adapts the cutter shank to the spindle.

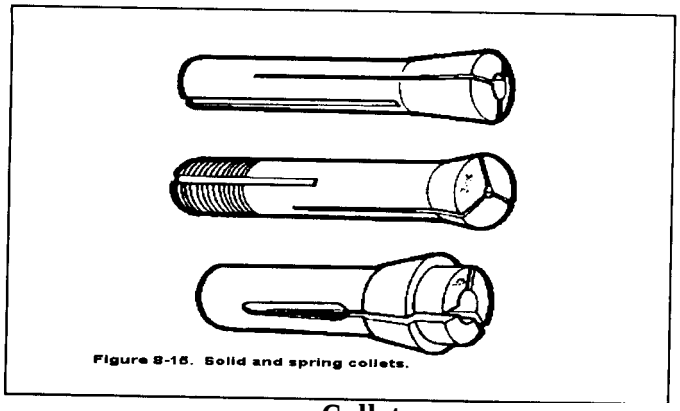

Figure 8-15. Solid and spring collets.

Collets

A collet is a form of a sleeve bushing for reducing the size of the hole in the milling machine spindle so that small shank tools can be fitted into large spindle recesses (Figure 8-15). They are made in several forms, similar to drilling machine sockets and sleeves, except that their tapers are not alike.

Spindle Adapters

A spindle adapter is a form of a collet having a standardized spindle end. They are available in a wide variety of sizes to accept cutters that cannot be mounted on arbors. They are made with either the Morse taper shank or the Brown and Sharpe taper with tang having a standard spindle end (Figure 8-16).

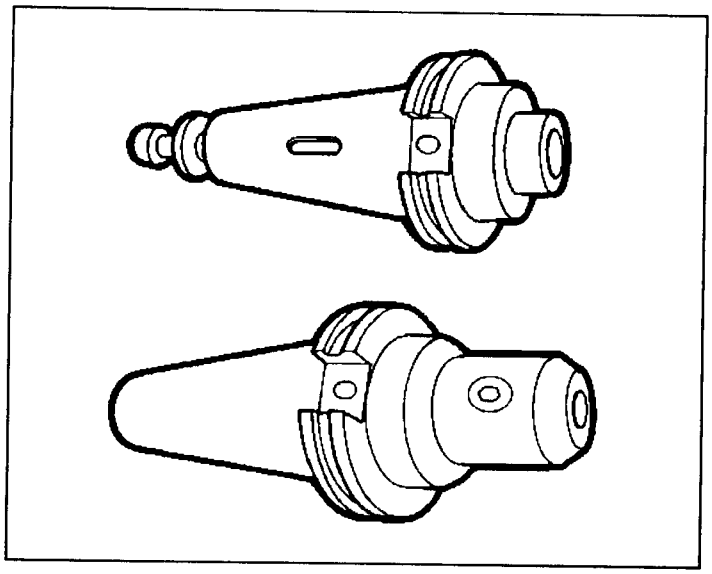

Figure 8-16. Milling machine adaptors.

Chuck Adapter

A chuck adapter (Figure 8-17) is used to attach chucks to milling machines having a standard spindle end. The collet holder is sometimes referred to as a collet chuck. Various forms of chucks can be fitted to milling machines spindles for holding drills, reamers, and small cutters for special operations.

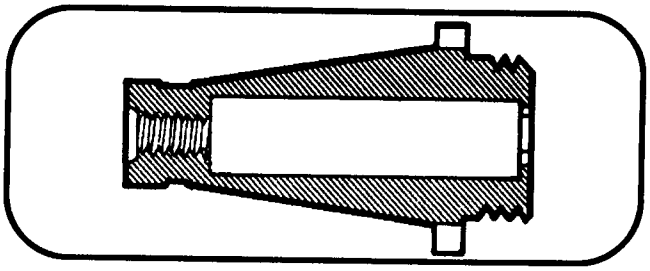

Figure 8-17. Chuck adaptor.

Quick-Change Tooling

The quick-change adapter mounted on the spindle nose is used to speed up tool changing. Tool changing with this system allows you to set up a number of milling operations such as drilling, end milling, and boring without changing the setup of the part being machined. The tool holders are mounted and removed from a master holder mounted to the machine spindle by means of a clamping ring (Figure 8-18).

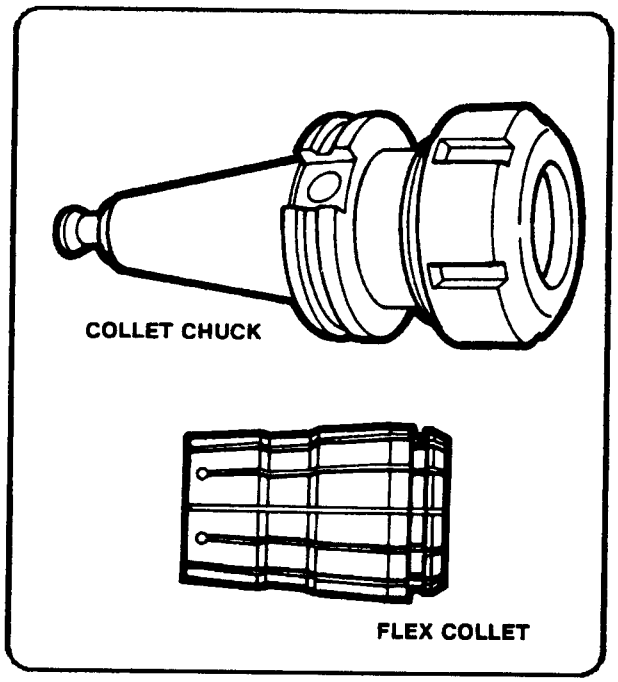

Figure 8-18. Quick-change adaptor and tool holder.

VISES

Either a plain or swivel-type vise is furnished with each milling machine. The plain vise, similar to the machine table vise, is used for milling straight workplaces and is bolted to the milling machine table either at right angles or parallel to the machine arbor. The swivel vise can be rotated and contains a scale graduated in degrees at its base to facilitate milling workplaces at any angle on a horizontal plane. The universal vise, which may be obtained as extra equipment, is designed so that it can be set at both horizontal and vertical angles. This type of vise maybe used for flat and angular milling. The all-steel vise is the strongest setup because the workpiece is clamped closer to the table. The vise can securely fasten castings, forgings, and rough-surfaced workplaces. The jaw can be positioned in any notch on the two bars to accommodate different shapes and sizes. The air or hydraulically operated vise is used more often in production work. This type of vise eliminates tightening by striking the crank with a lead hammer or other soft face hammer. See page 4-13 for examples of various vises.

ADJUSTABLE ANGLE PLATE

The adjustable angle plate is a workpiece holding device, similar to the universal vise in operation. Workpieces are mounted to the angle plate with T-bolts and clamps in the same manner used to fasten workplaces to the worktable of the milling machine. The angle plate can be adjusted to any angle so that bevels and tapers can be cut without using a special milling cutter or an adjustable cutter head.

INDEXING FIXTURE

The index fixture (Figure 8-19) consists of an index head, also called a dividing head, and footstock which is similar to the tailstock of a lathe. The index head and footstock attach to the worktable of the milling machine by T-slot bolts. An index plate containing graduations is used to control the rotation of the index head spindle. The plate is fixed to the index head, and an index crank, connected to the index head spindle by a worm gear and shaft. Workpieces are held between centers by the index head spindle and footstock. Workpieces may also be held in a chuck mounted to the index head spindle or may be fitted directly into the taper spindle recess of some indexing fixtures. There are many variations of the indexing fixture. Universal index head is the name applied to an index head designed to permit power drive of the spindle so that helixes may be cut on the milling machine. Gear cutting attachment is another name applied to an indexing fixture; in this case, one that is primarily intended for cutting gears on the milling machine.

HIGH-SPEED MILLING ATTACHMENT

The rate of spindle speed of the milling machine may be increased from 1 1/2 to 6 times by using the high-speed milling attachment. This attachment is essential when using cutters and twist drills which must be driven at a high rate of speed in order to obtain an efficient surface speed. The attachment is clamped to the column of the machine and is driven by a set of gears from the milling machine spindle.

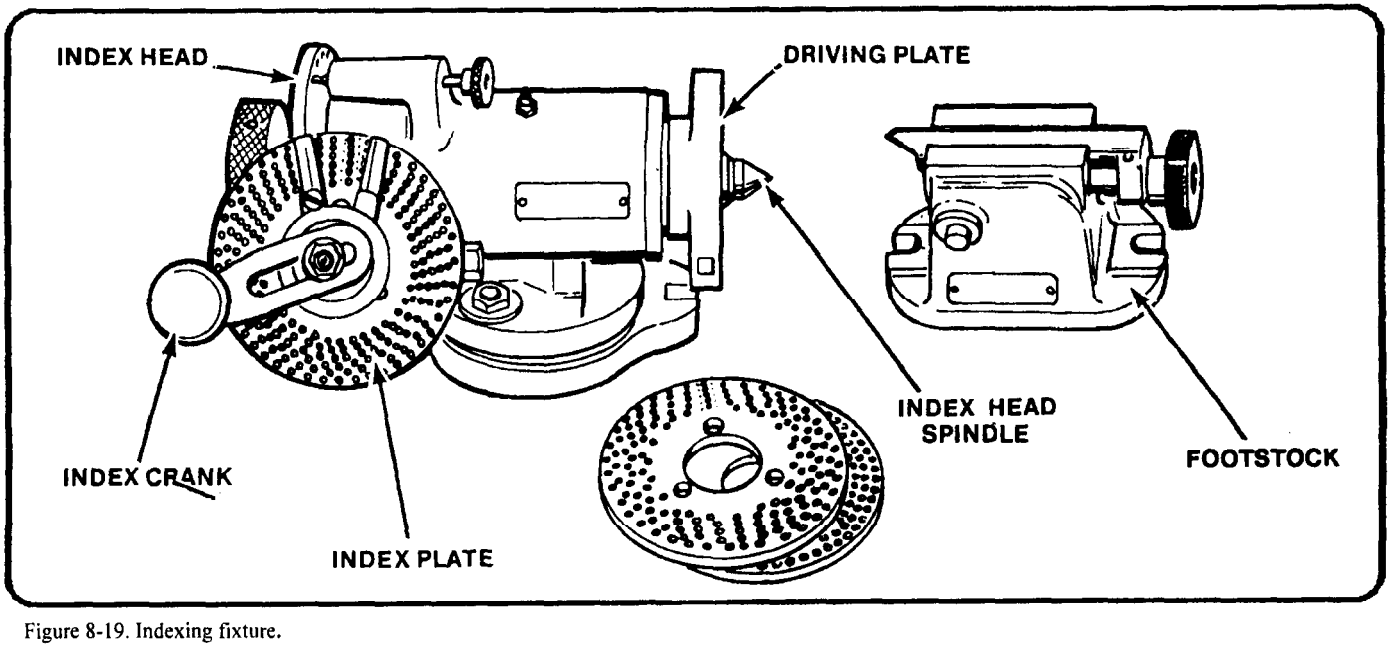

Figure 8-19. Indexing fixture.

VERTICAL SPINDLE ATTACHMENT

This attachment converts the horizontal spindle of a horizontal milling machine to a vertical spindle. It is clamped to the column and driven from the horizontal spindle. It incorporates provisions for setting the head at any angle, from the vertical to the horizontal, in a plane at right angles to the machine spindle. End milling and face milling are more easily accomplished with this attachment, because the cutter and the surface being cut are in plain view.

UNIVERSAL MILLING ATTACHMENT

This device is similar to the vertical spindle attachment but is more versatile. The butterhead can be swiveled to any angle in any plane, whereas the vertical spindle attachment only rotates in one place from horizontal to vertical.

ROTARY TABLE OR CIRCULAR MILLING ATTACHMENT

This attachment consists of a circular worktable containing T-slots for mounting workplaces. The circular table revolves on a base attached to the milling machine worktable. The attachment can be either hand or power driven, being connected to the table drive shaft if power driven. It may be used for milling circles, angular indexing, arcs, segments, circular slots, grooves, and radii, as well as for slotting internal and external gears. The table of the attachment is divided in degrees (Figure 8-20).

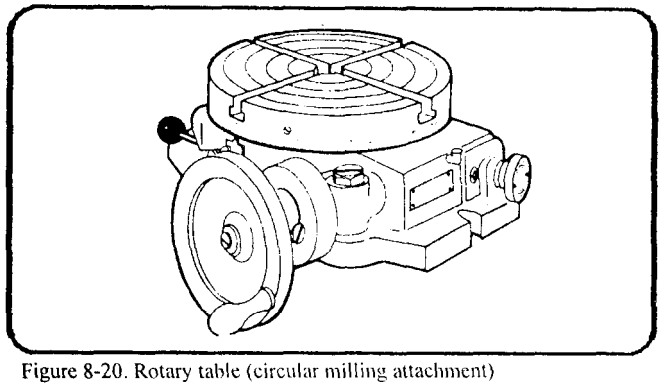

Figure 8-20. Rotary table (circular milling attachment)

OFFSET BORING HEAD

Boring, an operation that is too often restricted to a lathe, can be done easily on a milling machine. The offset boring head is an attachment that fits to the milling machine spindle and permits most drilled holes to have a better surface finish and greater diameter accuracy.

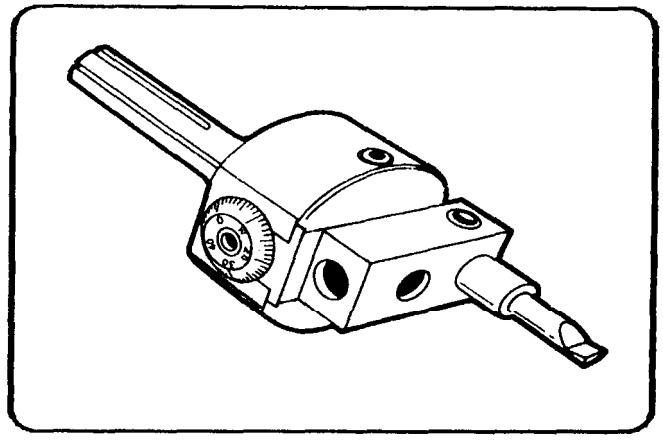

Figure 8-21. Offset boring head.

OFFSET BORING HEAD AND TOOLS

Figure 8-21 shows an offset boring head. Note that the boring bar can be adjusted at a right angle to the spindle axis. This feature makes it possible to position the boring cutter accurately to bore holes of varying diameters.

This adjustment is more convenient than adjusting the cutter in the boring bar holder or changing the boring bar. Another advantage of the offset boring head is the fact that a graduated micrometer collar allows the tool to be moved accurately a specified amount (usually in increments of 0.001) without the use of a dial indicator or other measuring device.

NOTE: On some boring heads, the reading on the tool slide is a direct reading. On other boring heads, the tool slide advances twice the amount shown on the micrometer dial.

MOUNTING AND INDEXING WORK

An efficient and positive method of holding workplaces to the milling machine table is important if the machine tool is to be used to its fullest advantage. The most common methods of holding are clamping a workpiece to the table, clamping a workpiece to the angle plate, clamping the workpiece in fixtures, holding a workpiece between centers, holding the workpiece in a chuck, and holding the workpiece in a vise. Page 4-13 of this manual shows a variety of mounting and holding devices. Regardless of the method used in holding, there are certain factors that should be observed in every case. The workpiece must not be sprung in clamping, it must be secured to prevent it from springing or moving away from the cutter, and it must be so aligned that it may be correctly machined T-slots, Milling machine worktables are provided with several T-slots which are used either for clamping and locating the workpiece itself or for

mounting the various holding devices and attachments. These T-slots extend the length of the table and are parallel to its line of travel. Most milling machine attachments, such as vises and index fixtures, have keys or tongues on the underside of their bases so that they may be located correctly in relation to the T-slots.

METHODS OF MOUNTING WORKPIECES

Clamping Workpieces to the Table

When clamping a workpiece to the worktable of the milling machine, the table and the workpiece should be free from dirt and burrs. Workpieces having smooth machined surfaces may be camped directly to the table, provided the cutter does not come in contact with the table surface during milling. When clamping workplaces with unfinished surfaces in this way, the table face should be protected from damage by using a shim under the workpiece. Paper, plywood, and sheet metal are shim materials. Clamps should be located on both sides of the workpiece if possible to give a full bearing surface. These clamps are held by T-slot bolts inserted in the T-slots of the table. Clamp supports must be the same height as the workpiece. Never use clamp supports that are lower than the workpiece. Adjustable step blocks are extremely useful to raise the clamps, as the height of the clamp bar may be adjusted to ensure maximum clamping pressure. Clamping bolts should be placed as near to the workpiece as possible so that the full advantage of the fulcrum principle may be obtained. When it is necessary to place a clamp on an overhanging part, a support should be provided between the overhang and the table to prevent springing or possible breakage. A stop should be placed at the end of the workpiece where it will receive the thrust of the cutter when heavy cuts are being taken.

Clamping a Workpiece to the Angle Plate

Workpieces clamped to the angle plate may be machined with surfaces parallel, perpendicular, or at an angle to a given surface. When using this method of holding a workpiece, precautions should be taken similar to those mentioned for clamping work directly to the table. Angle plates are either adjustable or nonadjustable and are generally held in alignment by keys or tongues that fit into the table T-slots.

Clamping Workpieces in Fixtures

Fixtures are generally used in production work where a number of identical pieces are to be machined. The design of the fixture depends upon the shape of the piece and the operations to be performed. Fixtures are always constructed to secure maximum clamping surfaces and are built to use a minimum number of clamps or bolts in order to reduce the setup time required. Fixtures should always be provided with keys to assure positive alignment with the table T-slots.

Holding Workpieces Between Centers

The indexing fixture is used to support workplaces which are centered on both ends. When the piece has been previously reamed or bored, it may be pressed upon a mandrel and then mounted between the centers.

Two types of mandrels may be used for mounting workplaces between centers. The solid mandrel is satisfactory for many operations, while one having a shank tapered to fit into the index head spindle is preferred in certain cases.

A jackscrew is used to prevent springing of long slender workplaces held between centers or workplaces that extend some distance from the chuck.

Workpieces mounted between centers are fixed to the index head spindle by means of a lathe dog. The bent tail of the dog should be fastened between the setscrews provided in the driving center clamp in such a manner as to avoid backlash and prevent springing the mandrel. When milling certain types of workpieces, a milling machine dog is held in a flexible ball joint which eliminates shake or spring of the dog or the workpiece. The flexible ball joint allows the tail of the dog to move in a radius along the axis of the workpiece, making it particularly useful in the rapid milling of tapers.

Holding Workpieces in a Chuck

Before screwing the chuck to the index head spindle, it should be cleaned and any burrs on the spindle or chuck removed. Burrs may be removed with a smooth-cut, three cornered file or scraper, while cleaning should be accomplished with a piece of spring steel wire bent and formed to fit the angle of the threads. The chuck should not be tightened on the spindle so tightly that a wrench or bar is required to remove it. Cylindrical workplaces held in the universal chuck may be checked for trueness by using a test indicator mounted upon a base resting upon the milling machine table. The indicator point should contact the circumference of small diameter workpieces, or the circumference and exposed face of large diameter pieces. While checking, the workpiece should be revolved by rotating the index head spindle.

Holding Workpieces in the Vise

As previously mentioned, five types of vises are manufactured in various sizes for holding milling machine workplaces. These vises have locating keys or tongues on the underside of their bases so they may be located correctly in relation to the T-slots on the milling machine table (Figure 8-22).

The plain vise similar to the machine table vise is fastened to the milling machine table. Alignment with the milling machine table is provided by two slots at right angles to each other on the underside of the vise. These slots are fitted with removable keys that align the vise with the table T-slots either parallel to the machine arbor or perpendicular to the arbor.

The swivel vise can be rotated and contains a scale graduated in degrees at its base which is fastened to the milling machine table and located by means of keys placed in the T-slots. By loosening the bolts which clamp the vise to its graduated base, the vise may be moved to hold the workpiece at any angle in a horizontal plane. To set a swivel vise accurately with the machine spindle, a test indicator should be clamped to the machine arbor and a check made to determine the setting by moving either the transverse or the longitudinal feeds, depending upon the position of the vise jaws. Any deviation as shown by the test indicator should be corrected by swiveling the vise on its base.

The universal vise is used for work involving compound angles, either horizontally or vertically. The base of the vise contains a scale graduated in degrees and can rotate 360° in the horizontal plane and 90° in the vertical plane. Due to the flexibility of this vise, it is not adaptable for heavy milling.

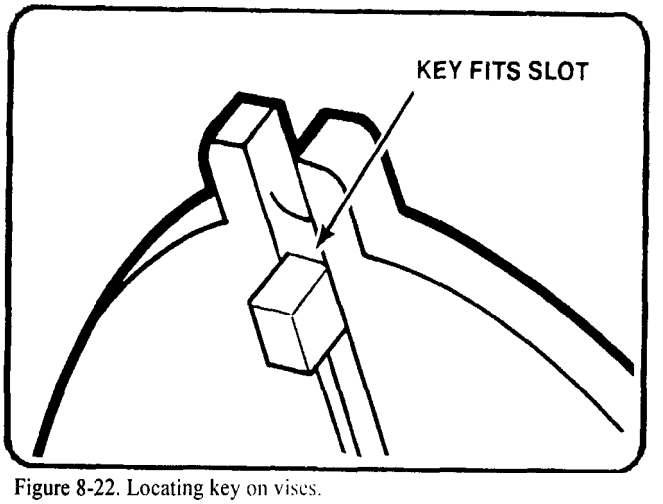

Figure 8-22. Locating key on vises.

The all-steel vise is the strongest setup where the workpiece is clamped close to the table. This vise can securely fasten castings, forgings, and rough-surface workplaces. The jaws can be positioned in any notch on the two bars to accommodate different shapes and sizes.

The air or hydraulically operated vise is used more often in production work. This type of vise eliminates the tightening by striking the crank with a lead hammer or other soft face hammer.

When rough or unfinished workplaces are to be vise mounted, a piece of protecting material should be placed between the vise and the workpiece to eliminate marring by the vise jaws.

When it is necessary to position a workpiece above the vise jaws, parallels of the same size and of the proper height should be used. These parallels should only be high enough to allow the required cut, as excessive raising reduces the holding ability of the jaws. When holding a workpiece on parallels, a soft hammer should be used to tap the top surface of the piece after the vise jaws have been tightened. This tapping should be continued until the parallels cannot be moved by hand. After the workpiece is set, additional tightening of the vise should not be attempted, as such tightening has a tendency to raise the work off the parallels. Correct selection of parallels is illustrated in Figure 8-23.

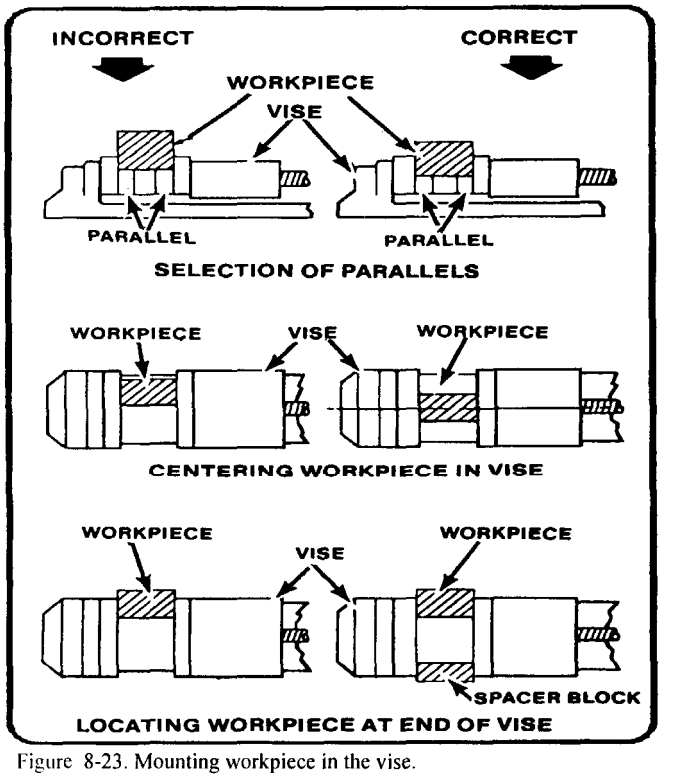

Figure 8-23. Mounting workpiece in the vise.

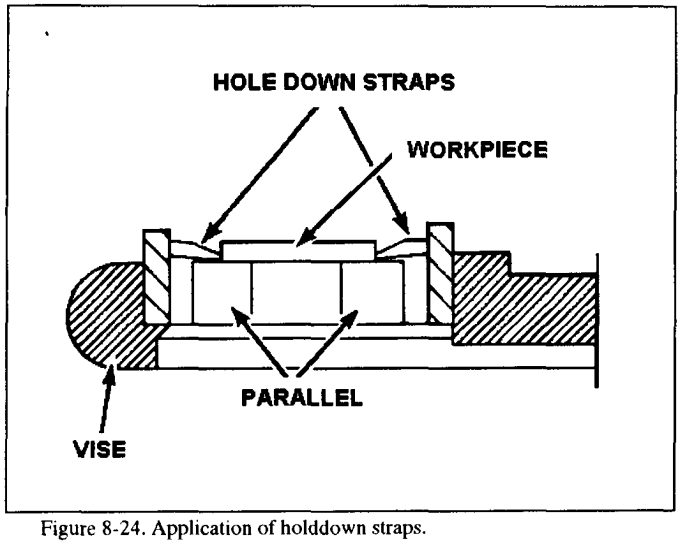

Figure 8-24. Application of holddown straps.

Whenever possible, the workpiece should be clamped in the center of the vise jaws. However, when necessary to mill a short workpiece which must be held at the end of the vise, a spacing block of the same thickness as the piece should be placed at the opposite end of the jaws. This will avoid strain on the movable jaw and prevent the piece from slipping. If the workpiece is so thin that it is impossible to let it extend over the top of the vise, hold down straps are generally used. See Figure 8-24. These straps are hardened pieces of steel, having one vertical side tapered to form an angle of about 92° with the bottom side and the other vertical side tapered to a narrow edge. By means of these tapered surfaces, the workpiece is forced downward into the parallels, holding them firmly and leaving the top of the workpiece fully exposed to the milling cutter.

Indexing

Indexing is the process of evenly dividing the circumference of a circular workpiece into equally spaced divisions, such as in cutting gear teeth, cutting splines, milling grooves in reamers and taps, and spacing holes on a circle. The index head of the indexing fixture is used for this purpose.

Index Head

The index head of the indexing fixture (Figure 8-19) contains an indexing mechanism which is used to control the rotation of the index head spindle to space or divide a workpiece accurately. A simple indexing mechanism consists of a 40-tooth worm wheel fastened to the index head spindle, a single-cut worm, a crank for turning the wormshaft, and an index plate and sector. Since there are 40 teeth in the worm wheel, one turn of the index crank causes the worm, and consequently, the index head spindle to make 1/40 of a turn; so 40 turns of the index crank revolve the spindle one full turn.

Index Plate

The indexing plate (Figure 8-25) is a round plate with a series of six or more circles of equally spaced holes; the index pin on the crank can be inserted in any hole in any circle. With the interchangeable plates regularly furnished with most index heads, the spacing necessary for most gears, boltheads, milling cutters, splines, and so forth can be obtained. The following sets of plates are standard equipment:

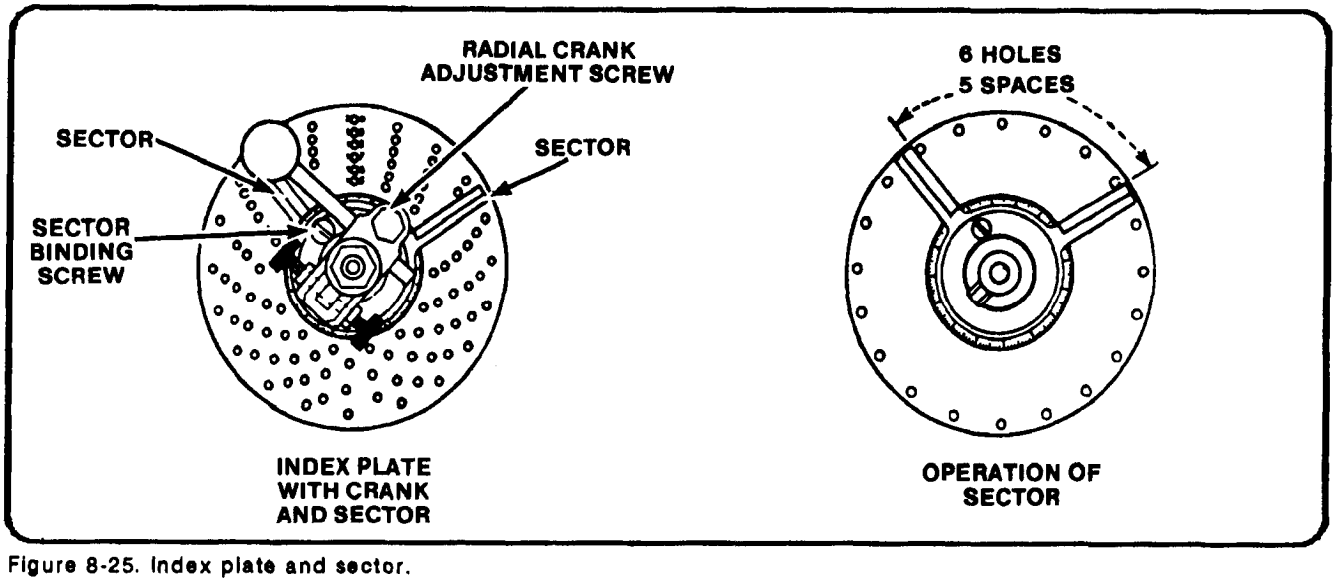

Figure 8-25. Index plate and sector.

Brown and Sharpe type consists of 3 plates of 6 circles each drilled as follows:

Plate I -15, 16, 17, 18, 19, 20 holes

Plate 2-21, 23, 27, 29, 31, 33 holes

Plate 3-37, 39, 41, 43,47,49 holes

Cincinnati type consists of one plate drilled on both sides with circles divided as follows:

First side -24, 25, 28, 30, 34, 37,38, 39,41,42,43 holes

Second side -46, 47, 49, 51, 53, 54, 57, 58, 59, 62, 66 holes

Sector

The sector (Figure 8-25) indicates the next hole in which the pin is to be inserted and makes it unnecessary to count holes when moving the index crank after each cut. It consists of two radial, beveled arms which can be set at any angle to each other and then moved together around the center of the index plate. Suppose that, as shown in Figure 8-25, it is desired to make a series of cuts, moving the index crank 1 1/4 turns after each cut. Since the circle illustrated has 20 holes, turn the crank one full turn plus five spaces after each cut, Set the sector arms to include the desired fractional part of a turn or five spaces between the beveled edges of its arms, as shown. If the first cut is taken with the index pin against the left-hand arm, to take the next cut, move the pin once against the right-hand arm of the sector. Before taking the second cut, move the arms so that the left-hand arm is again against the pin; this moves the right-hand arm another five spaces ahead of the pin. Then take the second cut, and repeat the operation until all the cuts have been completed.

NOTE: It is good practice always to index clockwise on the plate to eliminate backlash.

Plain Indexing

The following principles apply to basic indexing of workpieces:

Suppose it is desired to mill a project with eight equally spaced teeth. Since 40 turns of the index crank will turn the spindle one full turn, l/8th of 40 or 5 turns of the crank after each cut will space the gear for 8 teeth, If it is desired to space equally for 10 teeth, 1/10 of 40 or 4 turns would produce the correct spacing.

The same principle applies whether or not the divisions required divide equally into 40, For example, if it is desired to index for 6 divisions, 6 divided into 40 equals 6 2/3 turns; similarly, to index for 14 spaces, 14 divided into 40 equals 2 6/7 turns. These examples may be multiplied indefinitely and from them the following rule is derived: to determine the number of turns of the index crank needed to obtain one division of any number of equal divisions on the workpiece, divide 40 by the number of equal divisions desired (provided the worm wheel has 40 teeth, which is standard practice).

Direct Indexing

The construction of some index heads permits the worm to be disengaged from the worm wheel, making possible a quicker method of indexing called direct indexing. The index head is provided with a knob which, when turned through part of a revolution, operates an eccentric and disengages the worm.

Direct indexing is accomplished by an additional index plate fastened to the index head spindle. A stationary plunger in the index head fits the holes in this index plate. By moving this plate by hand to index directly, the spindle and the workpiece rotate an equal distance. Direct index plates usually have 24 holes and offer a quick means of milling squares, hexagons, taps, and so forth. Any number of divisions which is a factor of 24 can be indexed quickly and conveniently by the direct indexing method.

Differential Indexing

Sometimes, a number of divisions is required which cannot be obtained by simple indexing with the index plates regularly supplied. To obtain these divisions, a differential index head is used. The index crank is connected to the wormshaft by a train of gears instead of a direct coupling as with simple indexing. The selection of these gears involves calculations similar to those used in calculating change gear ratio for lathe thread cutting.

Indexing in Degrees

Workpieces can be indexed in degrees as well as fractions of a turn with the usual index head. There are 360 degrees in a complete circle and one turn of the index crank revolves the spindle 1/40 or 9 degrees. Therefore, 1/9 turn of the crank rotates the spindle 1 degree. Workpieces can therefore be indexed in degrees by using a circle of holes divisible by 9. For example, moving the crank 2 spaces on an 18-hole circle, 3 spaces on a 27-hole circle, or 4 spaces on a 36-hole circle

will rotate the spindle 1 degree, Smaller crank movements further subdivide the circle: moving 1 space on an 18-hole circle turns the spindle 1/2 degree (30 minutes), 1 space on a 27-hole circle turns the spindle 1/3 degree (20 minutes), and so forth.

Indexing Operations

The following examples show how the index plate is used to obtain any desired part of a whole spindle turn by plain indexing,

- Milling a hexagon. Using the rule previously given, divide 40 by 6 which equals 6 2/3 turns, or six full turns plus 2/3 of a turn or any circle whose number is divisible by 3. Take the denominator which is 3 into which of the available hole circles it can be evenly divided. In this case, 3 can be divided into the available 18-hole circle exactly 6 times. Use this result 6 as a multiplier to generate the proportional fraction required.

Example: $\frac{2 \times 6}{3 \times 6} = \frac{12}{18}$

Therefore, 6 full turns of the crank plus 12 spaces on an 18-hole circle is the correct indexing for 6 divisions.

- Cutting a gear. To cut a gear of 52 teeth, using the rule again, divide 40 by 52. This means that less than one full turn is required for each division, 40/52 of a turn to be exact. Since a 52-hole circle is not available, 40/52 must be reduced to its lowest term which is 10/13. Take the denominator of the lowest term 13, and determine into which of the available hole circles it can be evenly divided. In this case, 13 can be divided into a 39-hole circle exactly 3 times. Use this result 3 as a multiplier to generate the proportional fraction required.

Example: $\frac{10 \times 3}{13 \times 3} = \frac{30}{39}$

Therefore, 30 holes on a 39-hole circle is the correct indexing for 52 divisions. When counting holes, start with the first hole ahead of the index pin.

GENERAL MILLING OPERATIONS

GENERAL

Setup

The success of any milling operation depends, Before setting up a job, be sure that the to a great extent, upon judgment in setting up the job, workpiece, the table, the taper in the spindle, selecting the proper milling cutter, and holding the cutter by the best means under the circumstances Some fundamental practices have been proved by experience to be necessary for and the arbor or cutter shank are all clean and good results on all jobs. Some of these practices are mentioned be low...

- Before setting up a job, be sure that the workpiece, table, the taper in the spindle, and the arbor or cutter shank are free from chips, nicks, or burrs.
- Do not select a milling cutter of larger diameter than is necessary.
- Check the machine to see if it is in good running order and properly lubricated, and that it moves freely, but not too freely in all directions.
- Consider direction of rotation. Many cutters can be reversed on the arbor, so be sure you know whether the spindle is to rotate clockwise or counterclockwise.
- Feed the workpiece in a direction opposite the rotation of the milling cutter (conventional milling).
- Do not change feeds or speeds while the milling machine is in operation.
- When using clamps to secure a workpiece, be sure that they are tight and that the piece is held so it will not spring or vibrate under cut.
- Use a recommended cutting oil liberally.
- Use good judgment and common sense in planning every job, and profit from previous mistakes.
- Set up every job as close to the milling machine spindle as circumstances will permit.

Milling Operations

Milling operations may be classified under four general headings as follows:

- Face milling. Machining flat surfaces which are at right angles to the axis of the cutter,
- Plain or slab milling. Machining flat surfaces which are parallel to the axis of the cutter.
- Angular milling. Machining flat surfaces which are at an inclination to the axis of the cutter.
- Form milling. Machining surfaces having an irregular outline.

Special Operations

Explanatory names, such as sawing, slotting, gear cutting, and so forth have been given to special operations. Routing is a term applied to milling an irregular outline while controlling the workpiece movement by hand feed. Grooving reamers and taps is called fluting. Gang milling is the term applied to an operation in which two or more milling cutters are used together on one arbor. Straddle milling is the term given to an operation in which two milling cutters are used to straddle the workpiece and mill both sides at the same time.

SPEEDS FOR MILLING CUTTERS

The speed of milling is the distance in FPM at which the circumference of the cutter passes over the work. The spindle RPM necessary to give a desired peripheral speed depends on the size of the milling cutter. The best speed is determined by the kind of material being cut and the size and type of cutter used, width and depth of cut, finish required, type of cutting fluid and method of application, and power and speed available are factors relating to cutter speed.

Factors Governing Speed

There are no hard and fast rules governing the speed of milling cutters; experience has shown that the following factors must be considered in regulating speed:

- A metal slitting saw milling cutter can be rotated faster than a plain milling cutter having a broad face.
- Cutters having undercut teeth (positive rake) cut more freely than those having radial teeth (without rake); hence, they may run at higher speeds.
- Angle cutters must be run at slower speeds than plain or side cutters.
- Cutters with inserted teeth generally will stand as much speed as a solid cutter.
- A sharp cutter may be operated at greater speeds than a dull one.
- A plentiful supply of cutting oil will permit the cutter to run at higher speeds than without cutting oil

Selecting Proper Cutting Speeds

The approximate values given in Table 8-1 in Appendix A may be used as a guide for selecting the proper cutting speed. If the operator finds that the machine, the milling cutter, or the workpiece cannot be handled suitably at these speeds, immediate readjustments should be made.

Table 8-1 lists speeds for high-speed steel milling cutters. If carbon steel cutters are used, the speed should be about one-half the recommended speed in the table. If carbide-tipped cutters are used, the speed can be doubled.

If a plentiful supply of cutting oil is applied to the milling cutter and the workpiece, speeds can be increased 50 to 100 percent. For roughing cuts, a moderate speed and coarse feed often give best results; for finishing cuts, the best practice is to reverse these conditions, using a higher speed and lighter feed.

Speed Computation

The formula for calculating spindle speed in revolutions per minute is as follows:

$$\mathbf{RPM} = \frac{\mathbf{CSx4}}{\mathbf{D}}$$

Where **RPM** = Spindle speed (in revolutions per minute).

CS = cutting speed of milling cutter (in SFPM)

D = diameter of milling cutter (in inches)

For example, the spindle speed for machining a piece of steel at a speed of 35 SFPM with a cutter 2 inches in diameter is calculated as follows:

$$\text{RPM} = \frac{\text{CSx4}}{\text{D}} = \frac{35\text{x}4}{2} = \frac{140}{2} = 70 \text{ RPM}$$

Therefore, the milling machine spindle would be set for as near 70 RPM as possible.

Table 8-2 in Appendix A is provided to facilitate spindle speed computations for standard cutting speeds and standard milling cutters.

FEEDS FOR MILLING

The rate of feed, or the speed at which the workpiece passes the cutter, determines the time required for cutting a job. In selecting the feed. there are several factors which should be considered.

Forces are exerted against the workpiece, the cutter, and their holding devices during the cutting process. The force exerted varies directly with the amount of feed and depth of cut. and in turn are dependent upon the rigidity and power of the machine. Milling machines are limited by the power they can develop to turn the cutter and the amount of vibration they can resist when using coarse feeds and deep cuts. The feed and depth of the cut also depend upon the type of milling cutter being used. For example. deep cuts or coarse feeds should not be attempted when using a small diameter end milling cutter. Coarse cutters with strong cutting teeth can be fed at a faster rate because the chips maybe washed out more easily by the cutting oil.

Coarse feeds and deep cuts should not be used on a frail workpiece if the piece is mounted in such a way that its holding device is not able to prevent springing or bending.

Experience and judgment are extremely valuable in selecting the correct milling feeds. Even though suggested rate tables are given. remember that these are suggestions only. Feeds are governed by many variable factors, such as the degree of finish required. Using a coarse feed, the metal is removed more rapidly but the appearance and accuracy of the surface produced may not reach the standard desired for the finished product. Because of this fact. finer feeds and increased speeds are used for finer. more accurate finishes. while for roughing. to use a comparatively low speed and heavy feed. More mistakes are made on overspeeding and underfeeding than on underspeeding and overfeeding.

Overspeeding may be detected by the occurrence of a squeaking. scraping sound. If vibration (referred to as chattering) occurs in the milling machine during the cutting process. the speed should be reduced and the feed increased. Too much cutter clearance. a poorly supported workpiece, or a badly worn machine gear are common causes of chattering.

Designation of Feed

The feed of the milling machine may be designated in inches per minute or millimeters per minute The milling feed is determined by multiplying the chip size (chip per tooth) desired (see Table 8-3 in Appendix A), the number of teeth on the cutter, and the revolutions per minute of the cutter.

Example: the formula used to find the workfeed in inches per minute.

IPM = CPTxNxRPM
IPM = Feed rate in inches per minute.
CPT = Chip pert
N = Number of teeth per minute of the milling cutter.

The first step is to calculate the spindle speed before the feed rate can be calculated,

$$\text{RPM} = \frac{\text{CSD 4}}{\text{D}} = \frac{300 \text{ x } 4}{1/2} = \frac{1{,}200}{0.5} = 2{,}400$$

The second step is to calculate the feed rate.

$$\begin{aligned}\text{IPM} &= \text{CPT x N x RPM}\\ &= 0.005 \text{ x } 2 \text{ x } 2{,}400\\ &= 24\end{aligned}$$

Therefore, the RPM for a l/2-inch-diameter end mill machining aluminum revolves at 2.400 RPM and the feed rate should be 24 inches per minute.

The formula used to find workfeed in millimeters per minute is the same as the formula used to find the feed in IPM, except that mm/min is substituted for IPM.

Direction of Feed

It is usually regarded as standard practice to feed the workpicce against the milling cutter. When the workpiece is fed against the milling cutter. the teeth cut under any scale on the workpiece surface and any backlash in the feed screw is taken up by the force of the cut. See Figure 8-26.

As an exception to this recommendation. it is advisable to feed with the milling cutter when cutting off stock or when milling comparatively deep or long slots.

The direction of cutter rotation is related to the manner in which the workplace is held. The cutter should rotate so that the piece springs away from the cutter; then there will be no tendency for the force of the cut to loosen the piece. No milling cutter should ever be rotated backward; this will break the teeth. If it is necessary to stop the machine during a finishing cut, the power feed should never be thrown out, nor should the workpiece be fed back under the cutter unless the cutter is stopped or the workpiece lowered. Never change feeds while the cutter is rotating.

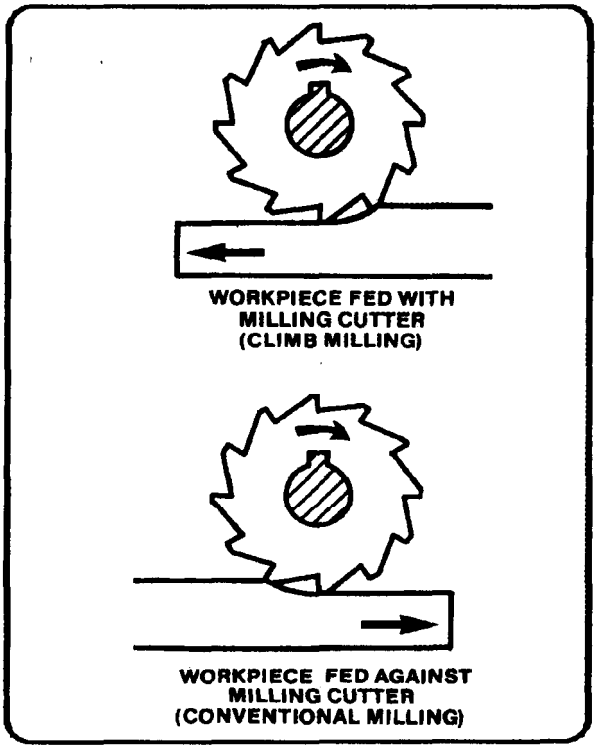

Figure 8-26. Direction of feed.

CUTTING OILS

The major advantage of using a coolant or cutting oil is that it dissipates heat, giving longer life to the cutting edges of the teeth. The oil also lubricates the cutter face and flushes away the chips, consequently reducing the possibility of marring the finish.

Types

Cutting oils are basically water-based soluble oils, petroleum oils, and synthetic oils. Water-based coolants have excellent heat transfer qualities; other oils result in good surface finishes. The cutting oil compounds for various metals are given in Table 4-3 in Appendix A. In general, a simple coolant is all that is required for roughing. Finishing requires a cutting oil with good lubricating properties to help produce a good finish on the workpiece. Plastics and cast iron are almost always machined dry.

Method of Use

The cutting oil or coolant should be directed by means of coolant drip can, pump system, or coolant mist mix to the point where the cutter contacts the workpiece. Regardless of method used, the cutting oil should be allowed to flow freely over the workpiece and cutter.

PLAIN MILLING

General

Plain milling, also called surface milling or slab milling, is milling flat surfaces with the milling cutter axis parallel to the surface being milled. Generally, plain milling is done with the workpiece surface mounted parallel to the surface of the milling machine table and the milling cutter mounted on a standard milling machine arbor. The arbor is well supported in a horizontal plane between the milling machine spindle and one or more arbor supports.

Mounting the Workpiece

The workpiece is generally clamped directly to the table or supported in a vise for plain milling. The milling machine table should be checked for alignment before starting to cut. If the workpiece surface to be milled is at an angle to the base plane of the piece, the workpiece should be mounted in a universal vise or on an adjustable angle plate. The holding device should be adjusted so that the workpiece surface is parallel to the table of the milling machine.

Selecting the Cutter

A careful study of the drawing must be made to determine what cutter is best suited for the job. Flat surfaces may be milled with a plain milling cutter mounted on an arbor. Deeper cuts may generally be taken when using narrow cutters than with wide cutters. The choice of milling cutters should be based on the size and shape of the workpiece. If a wide area is to be milled, fewer traverses will be required using a wide cutter. If large quantities of metal are to be removed, a coarse tooth cutter should be used for roughing and a finer tooth cutter should be used for finishing. A relatively slow cutting speed and fast table feed should be used for roughing, and a relatively fast cutting speed and slow table feed used for finishing. The surface should be checked for accuracy after each completed cut.

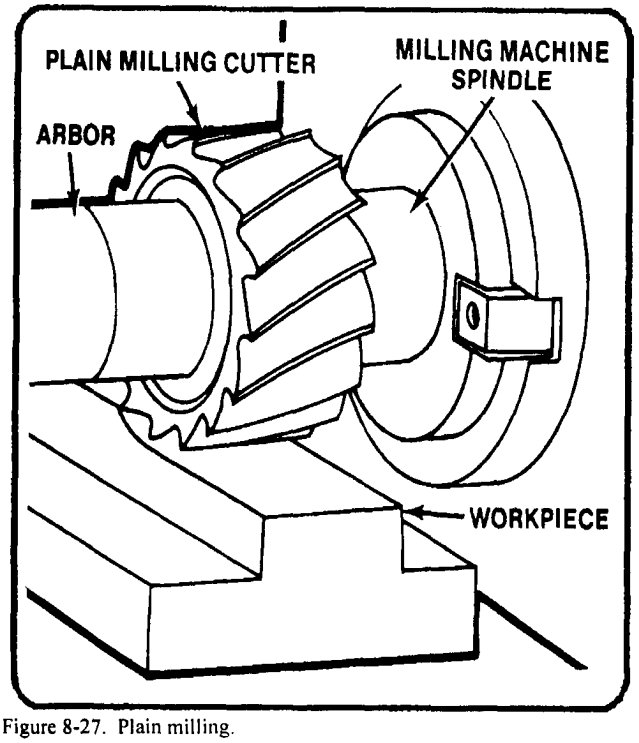

Figure 8-27. Plain milling.

Setup

A typical setup for plain milling is illustrated in Figure 8-27. Note that the milling cutter is positioned on the arbor with sleeves so that it is as close as practical to the milling machine spindle while maintaining sufficient clearance between the vise and the milling machine column. This practice reduces torque in the arbor and permits more rigid support for the cutter.

ANGULAR MILLING

General

Angular milling, or angle milling, is milling flat surfaces which are neither parallel nor perpendicular to the axis of the milling cutter. A single angle milling cutter is used for angular surfaces, such as chamfers, serration's, and grooves.
Milling dovetails (Figure 8-28) is a typical example of angular milling.

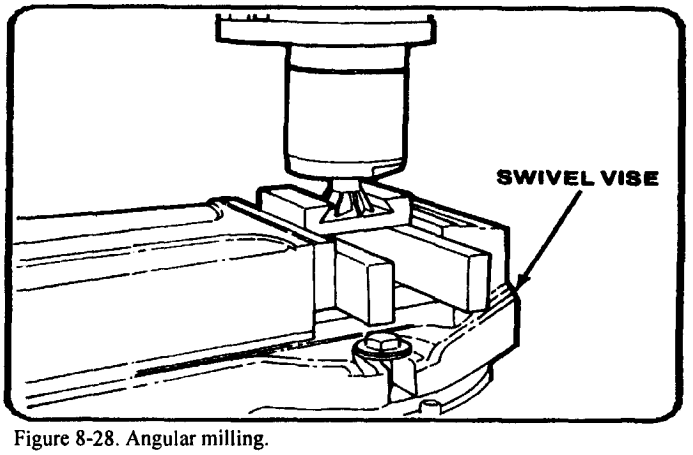

Figure 8-28. Angular milling.

Milling Dovetails

When milling dovetails, the usual angle of the cutter is 45°, 50°, 55°, or 60° based on common dovetail designs.

When cutting dovetails on the milling machine, the workpiece may be held in a vise, clamped to the table, or clamped to an angle plate. The tongue or *groove is* first roughed out using a side milling cutter, after which the angular sides and base are finished with an angle milling cutter.

In general practice, the dovetail is laid out on the workpiece surface before the milling operation is started. To do this, the required outline should be inscribed and the line prick-punched. These lines and punch marks may then be used as a guide during the cutting operation.

STRADDLE MILLING

When two or more parallel vertical surfaces are machined at a single cut, the operation is called straddle milling. Straddle milling is accomplished by mounting two side milling cutters on the same arbor, set apart at an exact spacing. Two sides of the workpiece are machined simultaneously and final width dimensions are exactly controlled.

MILLING A HEXAGON

Straddle milling has many useful applications introduction machining. Parallel slots of equal depth can be milled by using straddle mills of equal diameters. Figure 8-29 illustrates a typical example of straddle milling. In this case a hexagon is being cut, but the same operation may be applied to cutting squares or splines on the end of a cylindrical workpiece. The workpiece is usually mounted between centers in the indexing fixture or mounted vertically in a swivel vise. The two side milling cutters are separated by spacers, washers, and shims so that the distance between the cutting teeth of each cutter is exactly equal to the width of the workpiece area required. When cutting a square by this method, two opposite sides of the square are cut, and then the spindle of the indexing fixture or the swivel vise is rotated 90°, and the other two sides of the workpiece are straddle milled.

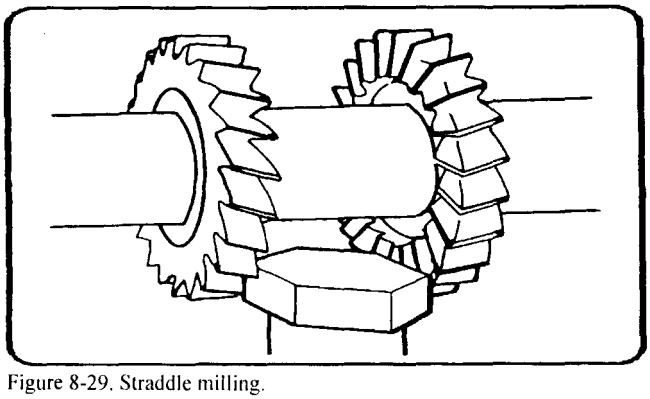

Figure 8-29. Straddle milling.

FACE MILLING

General

Face milling is the milling of surfaces that are perpendicular to the cutter axis, as shown in Figure 8-30. Face milling produces flat surfaces and machines work to the required length. In face milling, the feed can be either horizontal or vertical.

In face milling, the teeth on the periphery of the cutter do practically all of the cutting. However, when the cutter is properly ground, the face teeth actually remove a small amount of stock which is left as a result of the springing of the workpiece or cutter, thereby producing a finer finish.

It is important in face milling to have the cutter securely mounted and to see that all end play or sloppiness in the machine spindle is eliminated.

Mounting the Workpiece

When face milling, the workpiece may be clamped to the table or angle plate or supported in a vise, fixture, or jig.

Large surfaces are generally face milled on a vertical milling machine with the workpiece clamped directly to the milling machine table to simplify handling and clamping operations.

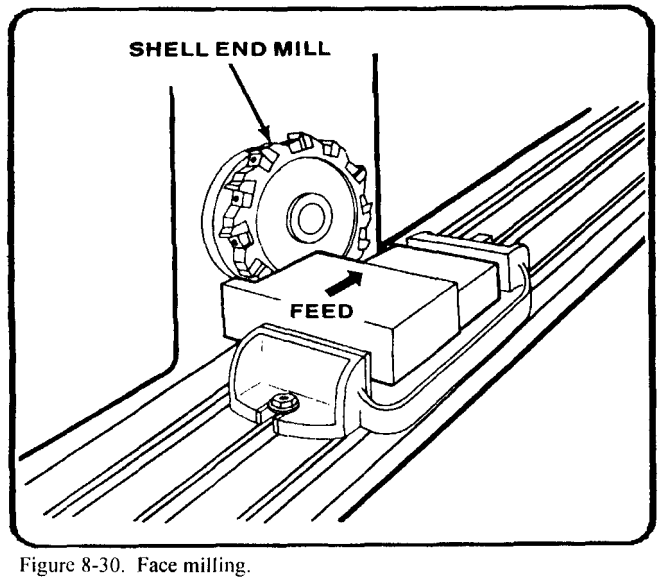

Figure 8-30. Face milling.

Angular surfaces can also be face milled on a swivel cutter head milling machine (Figure 8-31). In this case, the workpiece is mounted parallel to the table and the cutter head is swiveled to bring the end milling cutter perpendicular to the surface to be produced.

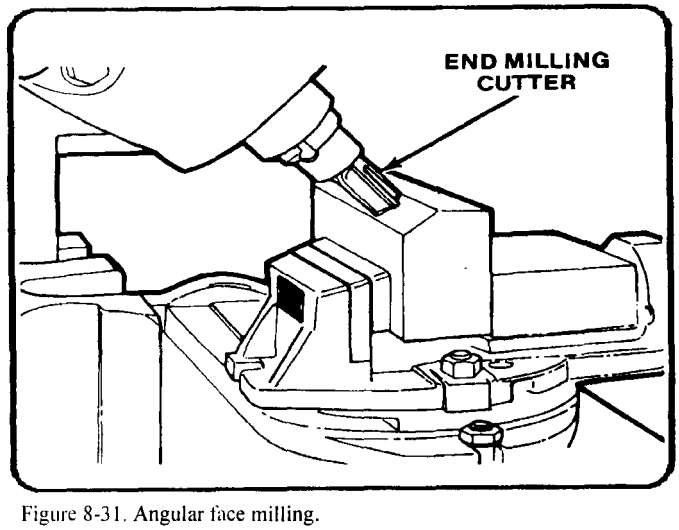

Figure 8-31. Angular face milling.

During face milling operations, the workpiece should be fed against the milling cutter so that the pressure of the cut is downward, thereby holding the piece against the table.Whenever possible, the edge of the workpiece should be in line with the center of the cutter. This position of the workpiece in relation to the cutter will help eliminate slippage.

Depth of Cut

When setting the depth of cut, the workpiece should be brought up to just touch the revolving cutter. After a cut has been made from this setting, measurement of the workpiece is taken. At this point, the graduated dial on the traverse feed is locked and used as a guide in determining the depth of cut.

When starting the cut, the workpiece should be moved so that the cutter is nearly in contact with its edge, after which the automatic feed may be engaged.

When a cut is started by hand, care must be taken to avoid pushing the corner of the workpiece between the teeth of the cutter too quickly, as this may result in cutter tooth breakage. In order to avoid wasting time during the operation, the feed trips should be adjusted to stop the table travel just as the cutter clears the workpiece.

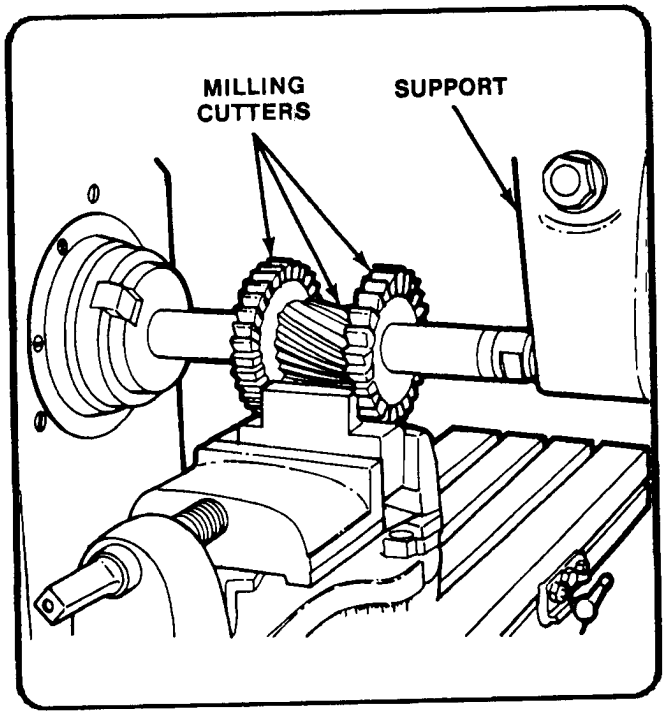

Figure 8-32. Gang milling.

GANG MILLING

Gang milling is the term applied to an operation in which two or more milling cutters are mounted on the same arbor and used when cutting horizontal surfaces. All cutters may perform the same type of operation or each cutter may perform a different type of operation. For example, several workplaces need a slot, a flat surface, and an angular groove. The best method to cut these would be gang milling as shown in Figure 8-32. All the completed workplaces would be the same. Remember to check the cutters carefully for proper size.

FORM MILLING

Form milling is the process of machining special contours composed of curves and straight lines, or entirely of curves, at a single cut. This is done with formed milling cutters, shaped to the contour to be cut. The more common form milling operations involve milling half-round recesses and beads and quarter-round radii on workplaces (Figure 8-33), This operation is accomplished by using convex, concave, and corner rounding milling cutters ground to the desired circle diameter. Other jobs for formed milling cutters include milling intricate patterns on workplaces and milling several complex surfaces in a single cut such as are produced by gang milling.

FLY CUTTING

General

Fly cutting, which is also called single point milling, is one of the most versatile milling operations. It is done with a single-point cutting tool shaped like a lathe tool bit. It is held and rotated by a fly cutter arbor. You can grind this cutter to almost any form that you need, as shown in Figure 8-34. Formed cutters are expensive. There are times when you need a special form cutter for a very limited number of parts. It is more economical to grind the desired form on a lathe-type tool bit than to buy a preground form cutter, which is very expensive and usually suitable only for one particular job.

Gear Cutting

The single-point or fly cutter can be used to great advantage in gear cutting. A II that is needed is enough of the broken gear to grind the cutting tool to the proper shape. It can also be used in the cutting of splines and standard and special forms.

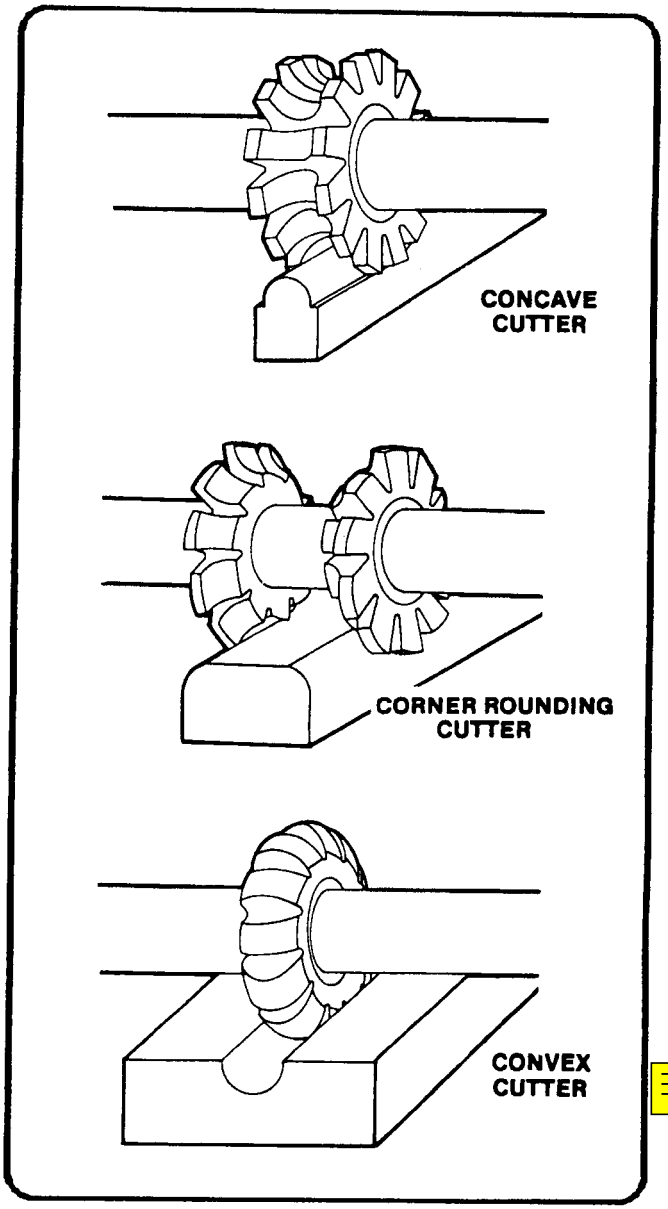

Figure 8-33. Form milling.

Flat Surfaces

Another type of fly cutter, which differs mainly in the design of the arbor, can be used to mill flat surfaces as in plain or face milling (Figure 8-34). The arbor can easily be manufactured in the shop using common lathe tool bits. This type of fly cutter is especially useful for milling flat surfaces on aluminum and other soft nonferrous metals, since a high quality finish can be easily obtained. Boring holes with this type of fly cutter is not recommended. The arbor is so short that only very shallow holes can be bored.

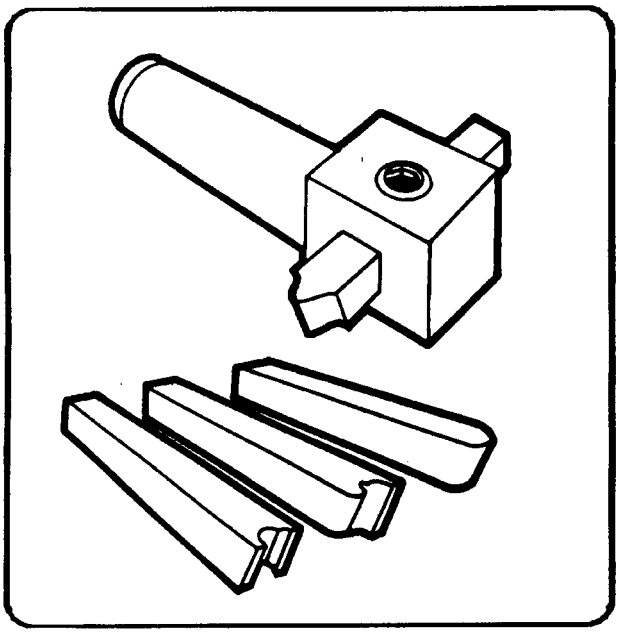

Figure 8-34. Fly cutter arbor and special-formed cutters.

KEYWAY MILLING

Keyways are grooves of different shapes cut along the axis of the cylindrical surface of shafts, into which keys are fitted to provide a positive method of locating and driving members on the shafts. A keyway is also machined in the mounted member to receive the key.

The type of key and corresponding keyway to be used depends upon the class of work for which it is intended. The most commonly used types of keys are the Woodruff key, the square-ends machine key, and the round-end machine key (Figure 8-35).

Woodruff Key

The Woodruff keys are semicylindrical in shape and are manufactured in various diameters and widths. The circular side of the key is seated into a keyway which is milled in the shaft. The upper portion fits into a slot in a mating part, such as a pulley or gear. The Woodruff key slot milling cutter (Figure 8-36) must have the same diameter as that of the key.

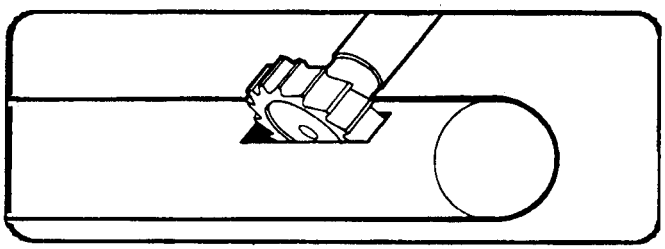

Figure 8-36. Woodruff keyslot.

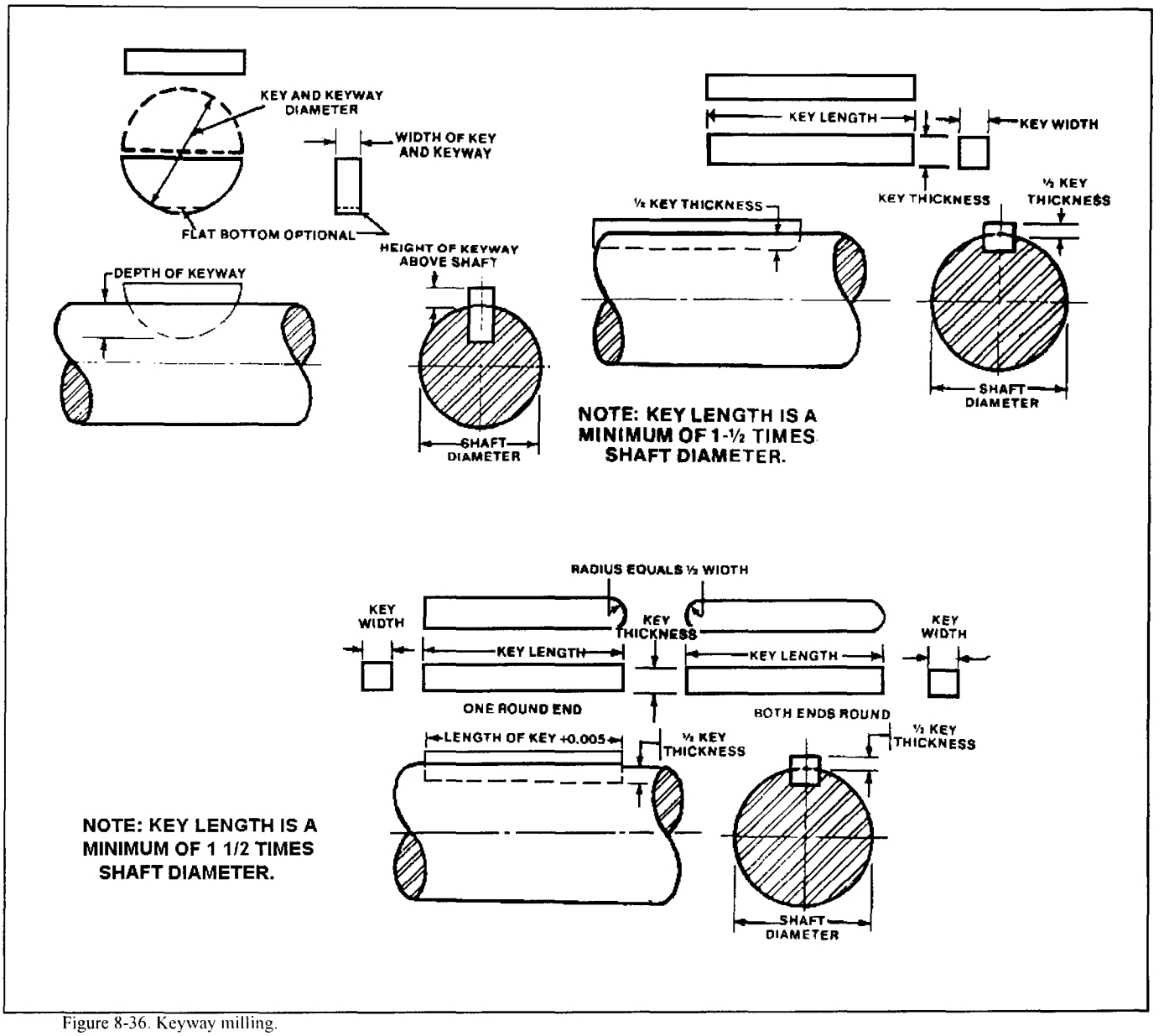

Figure 8-36. Keyway milling.

Woodruff key sizes are designated by a code number in which the last two digits indicate the diameter of the key in eighths of an inch, and the digits preceding the last two digits give the width of the key in thirty-seconds of an inch. Thus, a number 204 Woodruff key would be 4/8 or 1/2 inch in diameter and 2/32 or 1/16 inch wide, while a number 1012 Woodruff key would be 12/8 or 1 1/2 inches in diameter and 10/32 or 5/16 inch wide. Table 8-4 in Appendix A lists Woodruff keys commonly used and pertinent information applicable to their machining.

For proper assembly of the keyed members to be made, a clearance is required between the top surface of the key and the keyway of the bore. This clearance may be from a minimum of 0.002 inch to a maximum of 0.005 inch. Positive fitting of the key in the shaft keyway is provided by making the key 0.0005 to 0.001 inch wider than the keyway.

Square-End Machine Key

Square-ends machine keys are square or rectangular in section and several times as long as they are wide. For the purpose of interchangeability and standardization, these keys are usually proportioned with relation to the shaft diameter in the following method:

- Key width equals approximately one-quarter of the shaft diameter.
- Key thickness for rectangular section keys (flat keys) equals approximately 1/6 of the shaft diameter.
- Minimum length of the key equals 1 1/2 times the shaft diameter.
- Depth of the keyway for square section keys is 1/2 the width of the key.
- Depth of the keyway for rectangular section keys (flat keys) is 1/2 the thickness of the key,

Table 8-5 in Appendix A lists common sizes for square-end machine keys. The length of each key is not included because the key may be of any length as long as it equals at least 1 1/2 times the shaft diameter.

Round-end machine keys (Figure 8-35). The round-ends machine keys are square in section with either one or both ends rounded off. These keys are the same as square-ends machine keys in measurements (see Table 8-5 in Appendix A).

Milling Cutters Used for Milling Keyways

Shaft keyways for Woodruff keys are milled with Woodruff keyslot milling cutters (Figure 8-35). The Woodruff keyslot milling cutters are numbered by the same system employed for identifying Woodruff keys, Thus, a number 204 Woodruff keyslot cutter has the proper diameter and width for milling a keyway to fit a number 204 Woodruff key.

Square-end keyways can be cut with a plain milling cutter or side milling cutter of the proper width for the key

Round-end keyways must be milled with end milling cutters (Figure 8-37) so that the rounded end or ends of the key may fit the ends of the keyway. The cutter should be equal in diameter to the width of the key.

Alignment of Milling Cutters

When milling keyways. the shaft may be supported in the vise or chuck, mounted between centers. or clamped to the milling machine table. The cutter must be set centrally with the axis of the workpiece. This alignment is accomplished by using one of the following methods:

When using a Woodruff keyslot milling cutter, the shaft should be positioned so that the side of the cutter is tangential to the circumference of the shaft. This is done by moving the shaft transversely to a point that permits the workpiece to touch the cutter side teeth. At this point the graduated dial on the cross feed is locked and the milling machine table is lowered. Then, using the cross feed graduated dial as a guide, the shaft is moved transversely a distance equal to the radius of the shaft plus 1/2 the width of the cutter.

End mills may be aligned centrally by first causing the workpiece to contact the periphery of the cutter, then proceeding as in the paragraph above.

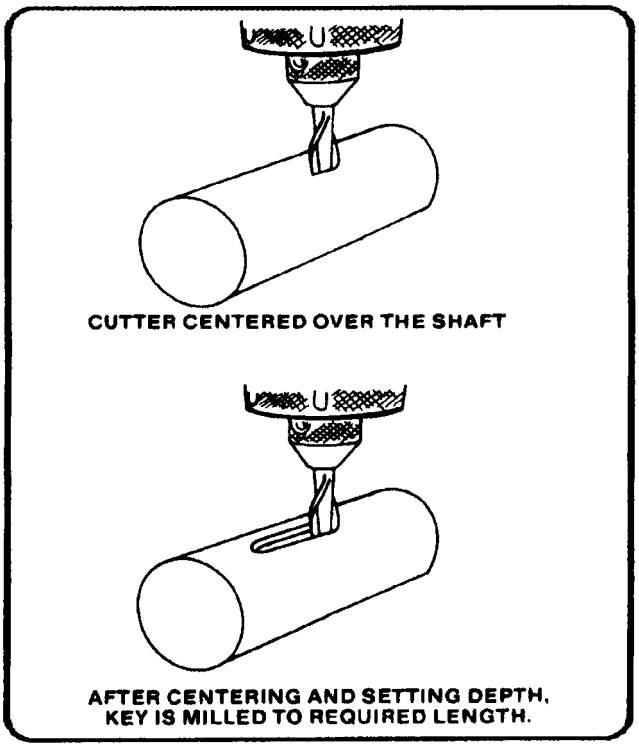

Figure 8-37. Round-end keyway.

Milling Woodruff Key Slot

The milling of a Woodruff keyslot is relatively simple since the proper sized cutter has the same diameter and thickness as the key. With the milling cutter located over the position in which the keyway is to be cut, the workpiece should be moved up into the cutter until you obtain the desired keyseat depth. Refer to Table 8-4 in Appendix A for correct depth of keyslot cut for standard Woodruff key sizes. The work may be held in a vise. chuck. between centers. or clamped to the milling machine table. Depending on its size, the cutter is held in an arbor or in a spring collet or drill chuck that has been mounted in the spindle of the milling machine.

Milling Keyslot for Square-End Machine Key

The workpiece should be properly mounted, the cutter centrally located, and the workpiece raised until the milling cutter teeth come in contact with the workpiece. At this point, the graduated dial on the vertical feed is locked and the workpiece moved longitudinally to allow the cutter to clear the workpiece. The vertical hand feed screw is then used to raise the workpiece until the cutter obtains the total depth of cut. After this adjustment. the vertical adjustment control should be locked and the cut made by feeding the table longitudinally.

Milling Keyway for Round-End Machine Key

Rounded keyways are milled with an end milling cutter Of the proper diameter. As in the case of square-ends machine key keyways, the workpiece should be properly mounted and the cutter centrally located with respect to the shaft. The shaft or cutter is then positioned to permit the end of the cutter to tear a piece of thin paper held between the cutter and the workpiece. At this point the graduated feed dial should be locked and used as a guide for setting the cutter depth. The ends of the keyway should be well marked and the workpiece moved back and forth making several passes to eliminate error due to spring of the cutter.

T-SLOT MILLING

Cutting T-slots in a workpiece holding device is a typical milling operation. The size of the T-slots depends upon the size of the T-slot bolts which will be used. Dimensions of T-slots and T-slot bolts are standardized for specific bolt diameters. The dimensions for bolt diameters commonly used are given in Table 8-6 (Appendix A).

Selection of Milling Cutters

Two milling cutters are required for milling T-slots, a T-slot milling cutter and either a side milling cutter or an end milling cutter. The side milling cutter (preferably of the staggered tooth type) or the end milling cutter is used to cut a slot in the workpiece equal in width to the throat width of the T-slot and equal in depth to slightly less than the head space depth plus the throat depth). The T-slot milling cutter is then used to cut the head space to the prescribed dimensions.

Milling the T-Slot

The position of the T-slot is laid out on the workpiece. The throat depth is determined by considering the thickness of the workpiece and the maximum and minimum dimensions allowable (Table 8-6. Appendix A).

A side milling cutter or an end milling cutter is then selected. The cutter should be of proper size to mill a slot equal in width to the throat width prescribed for the T-slot size desired. Cut a plain groove equal to about 1/16 inch less than the combined throat depth and head space depth.

Select a T-slot milling cutter for the size T-slot to be cut. T-slot milling cutters are identified by the T-Slot bolt diameter and remanufactured with the proper diameter and width to cut the head space to the dimensions given in Table 8-6 in Appendix A. Position the T-slot milling cutter over the edge of the workpiece and align it with the previously cut groove. Feed the table longitudinally to make the cut. Flood the cutter and workpiece with cutting oil during this operation. Figure 8-38 shows a T-slot milling cutter and dimension locations for T-slots.

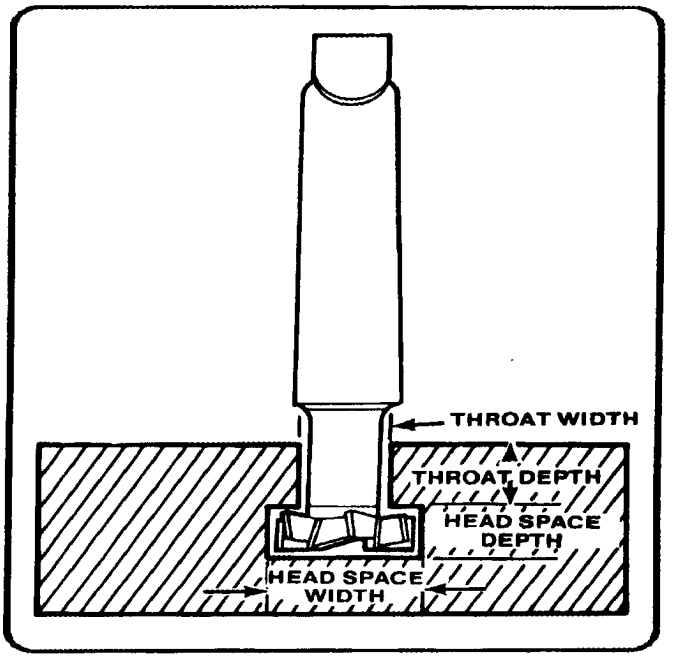

Figure 8-38. T-slot. milling.

SAWING AND PARTING

Metal slitting saw milling cutters are used to part stock on a milling machine. Figure 8-39 illustrates parting solid stock. The workpiece is being fed against the rotation of the cutter. For greater rigidity while parting thin material such as sheet metal, the vworkpiece may be clamped directly to the table with the line of cut over one of the table T-slots. In this case, the workpiece should be fed with the rotation of the milling cutter (climb milling) to prevent it from being raised off the table. Every precaution should be taken to eliminate backlash and spring in order to prevent climbing or gouging the workpiece.

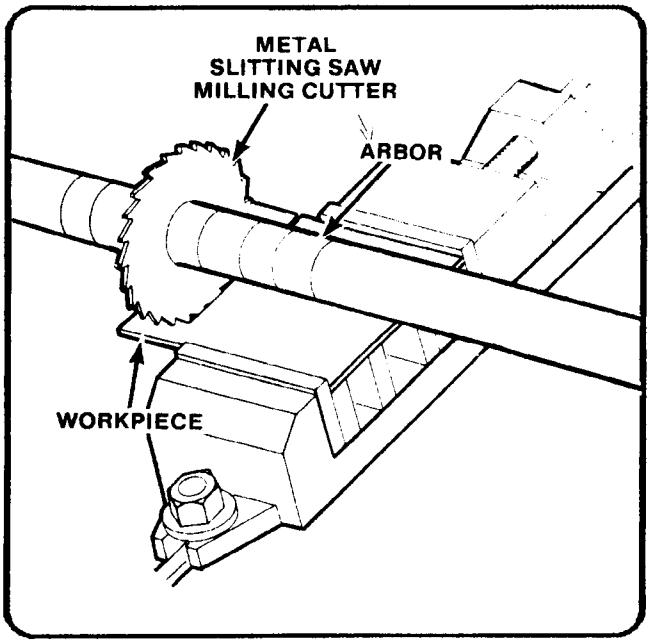

Figure 8-39. Parting solid stock.

HELICAL MILLING

A helix may be defined as a regular curved path. such as is formed by winding a cord around the surface of a cylinder. Helical parts most commonly cut on the milling machine include helical gears. spiral flute milling cutters, twist drills. and helical cam grooves. When milling a helix. a universal index head is used to rotate the workpiece at the proper rate of speed while the piece is fed against the cutter. A train of gears between the table feed screw and the index head serves to rotate the workpiece the required amount for a given longitudinal movement of the table. Milling helical parts requires the use of special formed milling cutters and double-angle milling cutters, The calculations and formulas necessary to compute proper worktable angles, gear adjustments. and cutter angles and positions for helical milling are beyond the scope of this manual,

GEAR CUTTING

Gear teeth are cut on the milling machine using formed milling cutters called involute gear cutters. These cutters are manufactured in many pitch sizes and shapes for different numbers of teeth per gear (Table 8-7, Appendix A).

If involute gear cutters are not available and teeth must be restored on gears that cannot be replaced. a lathe cutter bit ground to the shape of the gear tooth spaces may be mounted in a fly cutter for the operation. The gear is milled in the following manner:

NOTE: This method of gear cutting is not as accurate as using an involute gear cutter and should be used only for emergency cutting of teeth which have been built up by welding,

Fasten the indexing fixture to the milling machine table. Use a mandrel to mount the gear between the index head and footstock centers. Adjust the indexing fixture on the milling machine table or adjust the position of the cutter to make the gear axis perpendicular to the milling machine spindle axis. Fasten the cutter bit that has been ground to the shape of the gear tooth spaces in the fly cutter arbor. Adjust the cutter centrally with the axis of the gear. Rotate the milling machine spindle to position the cutter bit in the fly cutter so that its cutting edge is downward.

Align the tooth space to be cut with the fly cutter arbor and cutter bit by turning the index crank on the index head.

Proceed to mill the tooth in the same manner as milling a keyway.

SPLINE MILLING

Splines are often used instead of keys to transmit power from a shaft to a hub or from a hub to a shaft. Splines are. in effect. a series of parallel keys formed integrally with the shaft. mating with corresponding grooves in the hub or fitting (Figure 8-40). They are particularly useful where the hub must slide axially on the shaft, either under load or freely. Typical applications for splines are found in geared transmissions, machine tool drives. and in automatic mechanisms.

Splined Shafts and Fittings

Splined shafts and fittings are generally cut by bobbing and broaching on special machines. However. when spline shafts must be cut for a repair job. the operation may be accomplished on the milling machine in a manner similar to that described for cutting keyways. Standard spline shafts and splint fittings have 4, 6, 10, or 16 splines, and theirdimensions depend upon the class of tit for the desired application: a permanent fit, a sliding fit when not under load, and a sliding fit under load. Table 8-8 in Appendix A lists the standard dimensions for 4, 6, 10, and 16-spline shafts.

Milling Splines

Spline shafts can be milled on the milling machine in a manner similar to the cutting of keyways.

The shaft to be splined is set up between centers in the indexing fixture.

Two side milling cutters are mounted to an arbor with a spacer and shims inserted between them. The spacer and shims are chosen to make space between the inner teeth of the cutters equal to the width of the spline to be cut (Table 8-8, Appendix A).

The arbor and cutters are mounted to the milling machine spindle. and the milling machine is adjusted so that the cutters are centered over the shaft.

The splines are cut by straddle milling each spline to the required depth (Table 8-8. Appendix A) and using the index head of the indexing fixture to rotate the workpiece the correct distance between each spline position.

After the splines are milled to the correct depth, mount a narrow plain milling cutter in the arbor and mill the spaces between the splines to the proper depth. It will be necessary to make several passes to cut the groove uniformly so that the spline fitting will not interfere with the grooves. A formed spline milling cutter, if available, can be used for this operation.

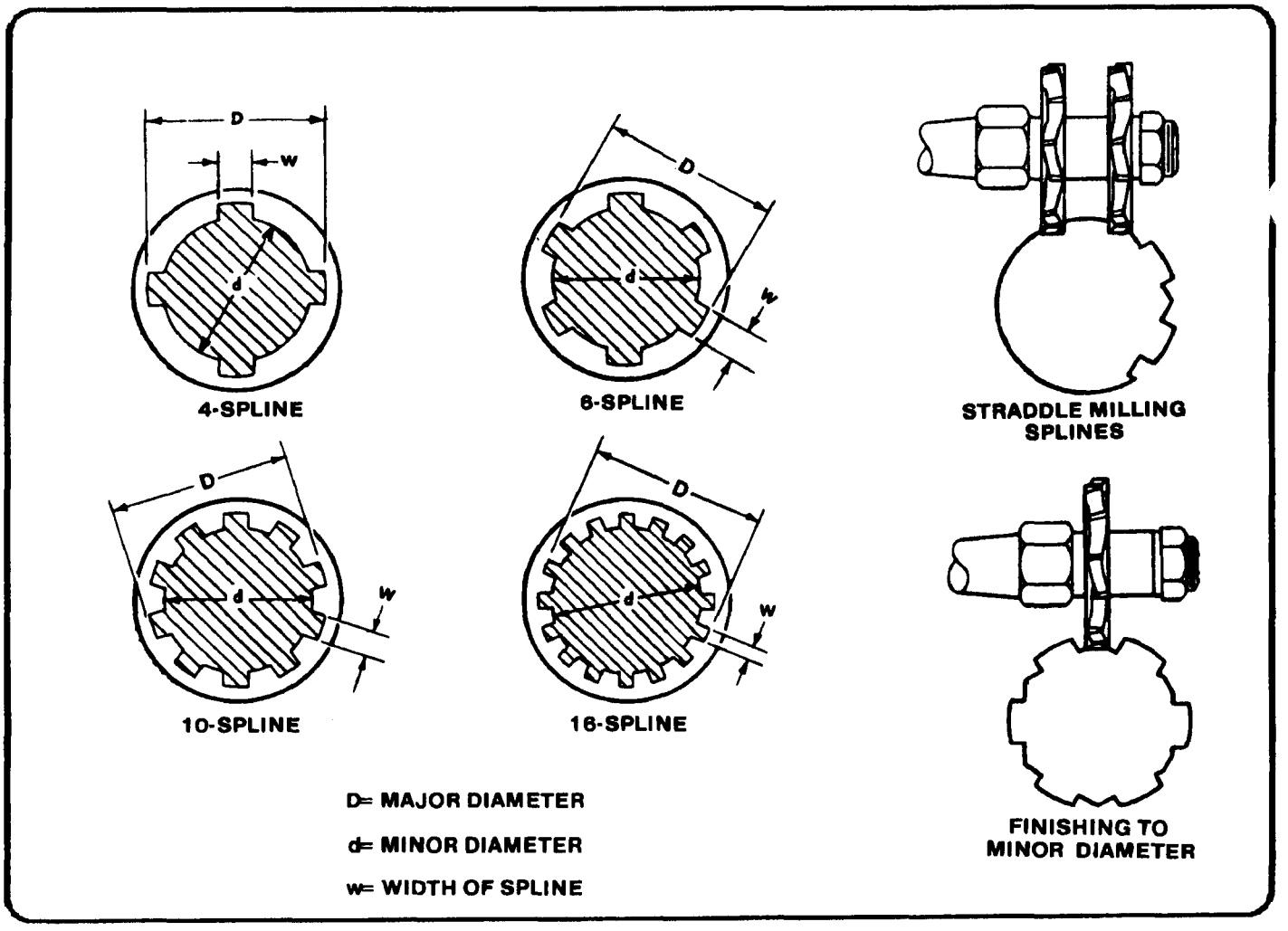

Figure 8-40. Milling spline shafts.

DRILLING

The milling machine may be used effectively for drilling, since accurate location of the hole may be secured by means of the feed screw graduations. Spacing holes in a circular path, such as the holes in an index plate, may be accomplished by indexing with the index head positioned vertically.

Twist drills may be supported in drill chucks fastened in the milling machine spindle or mounted directly in milling machine collets or adapters. The workpiece to be drilled is fastened to the milling machine table by clamps, vises, or angle plates.

BORING

Various types of boring tool holders may be used for boring on the milling machine. the boring tools being provided with either straight shanks to be held in chucks and holders or taper shanks to fit collets and adapters. The two attachments most commonly used for boring are the fly cutter arbor and the offset boring head.

The single-edge cutting tool used for boring on the milling machine is the same as a lathe cutter bit. Cutting speeds, feeds, and depth of cut should be the same as that prescribed for lathe operations.

Chapter 9

MILLING-GRINDING-DRILLING AND SLOTTING ATTACHMENT

(VERSA-M IL)

GENERAL

DESCRIPTION

The milling-grinding-drilling and slotting attachment is commonly referred to as a Versa-Mil. It is a compact, portable unit capable of doing many machining operations that normally require expensive single-purpose machines. With the different attachments that are available with the unit, drilling, shaping, milling, and grinding can be performed quickly and inexpensively. This self-powered, vertical-feed, variable-speed precision tool may be mounted in any position on the carriage, table, ram, turret, or tool arm of other machine tools. With a two-directional feed table, the Versa-Mil unit becomes a complete machining tool for bench or inplace machining of parts too large to be moved or held in conventional machine tools.

USES

An important factor in the efficiency of the Versa-Mil is that machine tools already in the shop area provide the power for feeds, a means of holding and moving the work, and the rigidity needed for machining. Faced with unusual machining problems, the Versa-Mil offers many solutions either as a separate tool or combined with other machine tools and machinery already in the shop to create special machines. The Versa-Mil increases the capabilities of standard machines by doing secondary operations without changing setups. The Versa-Mil provides power to interchangeable attachments allowing the unit to be used on site to perform different machining operations on equipment being repaired or rebuilt. Where space is limited, as in a shop area, floor space is needed only for the lathe. Different sizes of the Versa-Mil unit are available for light, medium, and heavy machining. This chapter will be limited to the Series 31 (light machining unit).

SAFETY PRECAUTIONS

Safety in the shop area or around power equipment cannot be overemphasized. Each piece of equipment has safety procedures unique to that particular piece of equipment. Listed below are safety procedures that pertain to the Versa-Mil.

- Avoid dangerous environments. Do not use the Versa-Mil in damp or wet locations. Do not expose the Versa-Mil to rain.
- Keep visitors away from running equipment. Keep visitors a safe distance from the Versa-Mil while it is in operation.
- Store tools when not in use. Store or lock tools and equipment in the Versa-Mil cabinet.
- Do not force the equipment. The Versa-Mil will do the job better and safer at the rate for which it was designed.
- Wear proper apparel. Keep shirt sleeves above the elbow. Remove ID tags, watches, rings, and any other jewelry when working around the Versa-Mil.
- Use safety glasses. Wear safety glasses when operating any type of machine shop equipment.
- Do not abuse the electrical cord. Never carry the Versa-Mil by the electrical cord or pull on the cord to disconnect it from the receptacle. Keep the cord away from excessive heat, oil, and sharp edges. Replace end connectors or cords when excessive wear or damage is apparent.
- Maintain tools with care. Keep tools and cutters sharp and clean for the best performance. Follow instructions in the Versa-Mil Operation and Service Manual for lubricating the basic unit and changing accessories.
- Disconnect equipment not in use. Ensure the Versa-Mil is disconnected when not in use, before servicing, and when changing attachments, speeds, cutters, or arbors.
- Remove chuck keys and wrenches. Form a habit of checking to see that chuck keys and wrenches are removed from the unit prior to operating the equipment. Remove all tools from the area that may vibrate off the equipment and into moving parts.

- Avoid accidental starting. Place protective cover around the switch to help prevent accidental starting of the Versa-Mil. Ensure switch is off before connecting the unit to a power supply.
- Outdoor use of extension cords. When using the Versa-Mil outdoors, use only extension cords designed and marked for outdoor use.
- Reversing switch. Ensure that the reversing switch is in the correct position for proper cutter rotation. Failure to do this could result in damage or injury by having a cutter or arbor dislodged from the basic unit.
- Pulley guard. The pulley guard must be in place before operating the Versa-Mil. This prevents fingers or clothing from getting caught between the belt and pulleys.
- Handle cutters with care. Handle all cutters with a cloth to prevent accidental cutting of fingers or hands.
- Grinding wheels. Use grinding wheels with the safe speed at least as high as the no-load RPM rating of the Versa-Mil grinding attachment.

TOOLS AND EQUIPMENT

VERSA-MIL BASIC UNIT

The Versa-Mil basic unit (Figure 9-1) has a powered machining head which moves vertically on four hardened ground guide posts by means of a precision-ground lead screw calibrated to 0.001 inch. Thirteen different speeds are available to the head through the use of different size pulleys to accommodate all types of machining and cutter sizes within the range of the unit. The circular T-slot on the face of the basic unit accommodates a variety of attachments. The graduation marks on the basic unit indicate the degree angle an attachment is to be positioned for various machining operations.

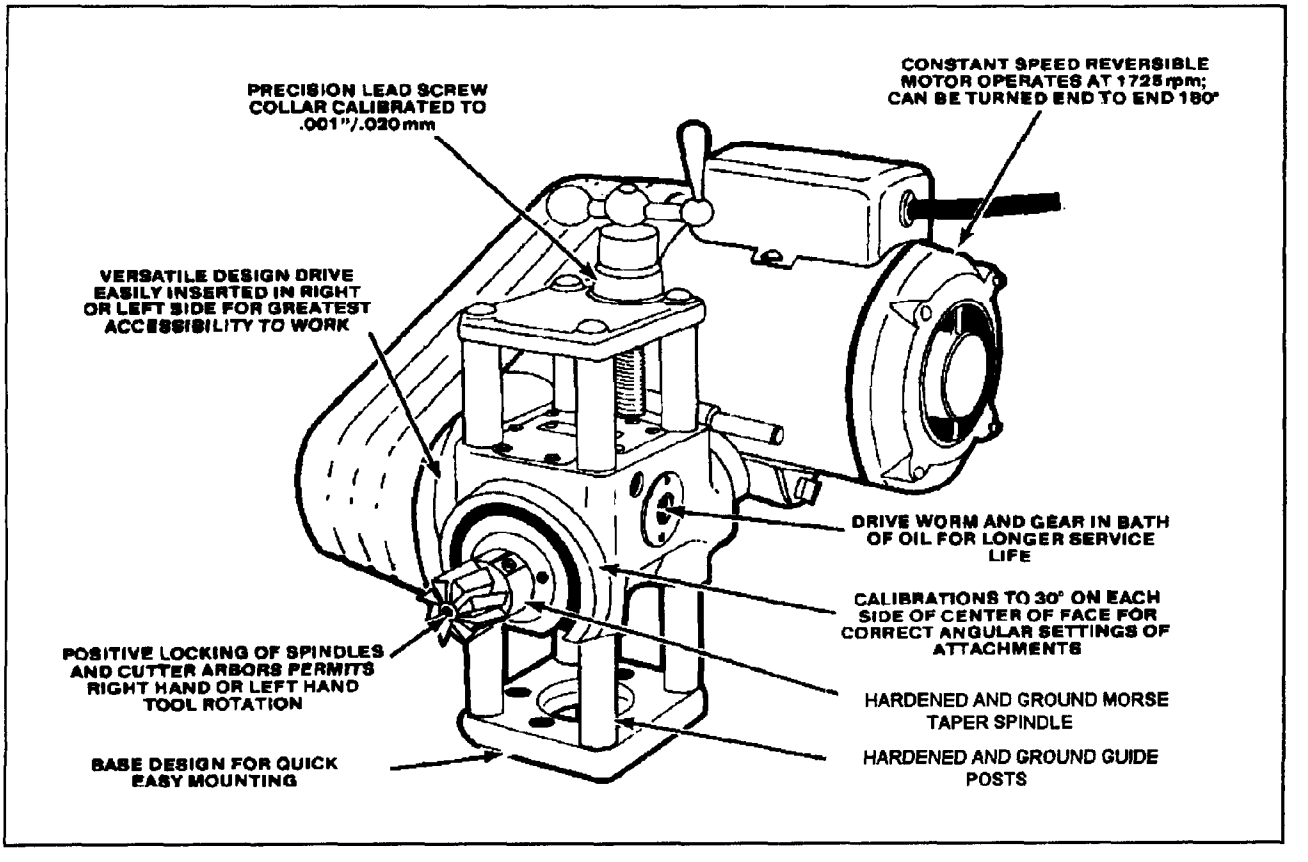

Figure 9-1. Versa-Mil basic unit.

ATTACHMENTS

External Grinding Attachment

The external grinding head (Figure 9-2) bolts to the face of the Versa-Mil making the unit a precision external grinder. The head adjusts to 30 degrees range of angle to either side. A flat belt from the motor provides power to the head for smooth operation. Different pulley diameters allow matching spindle speeds to the grinding wheel size and rating. A wheel guard on the head offers protection to the operator from debris coming off the wheel during grinding.

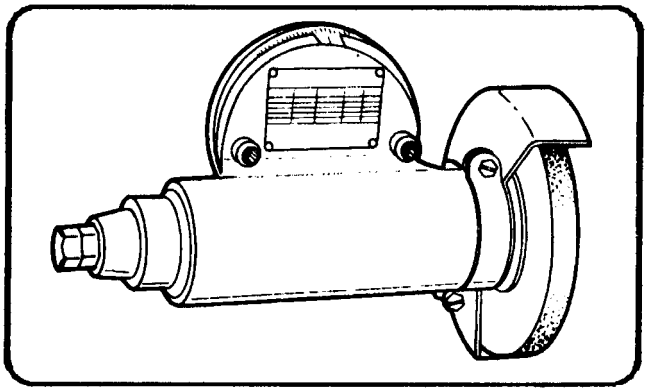

Figure 9-2. External grinding attachment.

Internal Grinding Attachment

A wide variety of internal grinding jobs can be handled on a lathe with the Versa-Mil basic unit and the internal grinding unit (Figure 9-3). The internal grinding attachment bolts to the face of the basic unit and is driven by a flat belt from the motor. The internal grinder handles grinding wheels from 5/8 inch to 2 1/2 inches in diameter and grinds to a depth of 4 inches. Five different speeds are available to match the spindle speed to the grinding wheel diameter and rating.

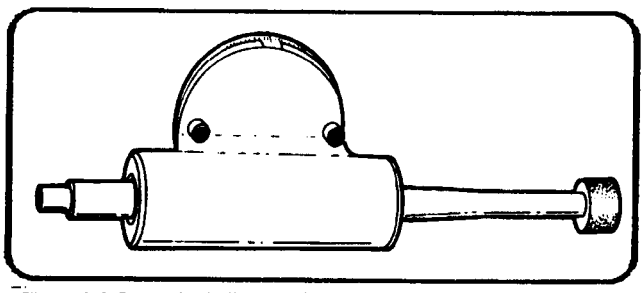

Figure 9-3. Internal grinding attachment.

Heavy-Duty Deep-Hole Grinder

The heavy-duty deep-hole grinder (Figure 9-4) may be attached to the face of the Versa-Mil for deep internal grinding. The deep-hole grinder accommodates grinding wheels 3 to 5 inches in diameter and grinds to a depth of 10 inches. A flat belt from the motor drives the deep-hole grinder for smooth operation. Six spindle speeds are available to match the spindle speed to the grinding wheel diameter and rating.

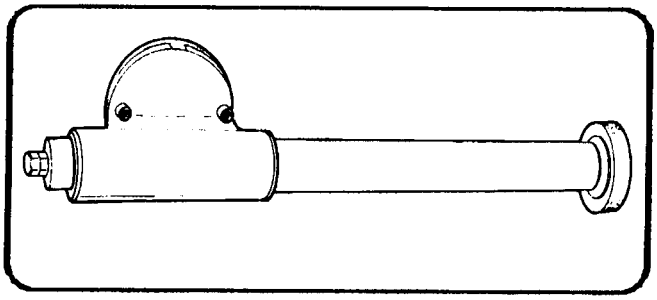

Figure 9-4. Heavy-duty, deep-hole grinder.

Tooth Stop Rest

Cutters held in the lathe chuck, collet, or between lathe centers can be ground quickly and accurately with the Versa-Mil unit equiped with an external or internal grinding head. The tooth stop rest (Figure 9-5) assures uniform grinding of cutter teeth because the finger on the gage ratchets over the teeth stopping each tooth in the exact same position. The tooth stop rest is completely adjustable for height and position.

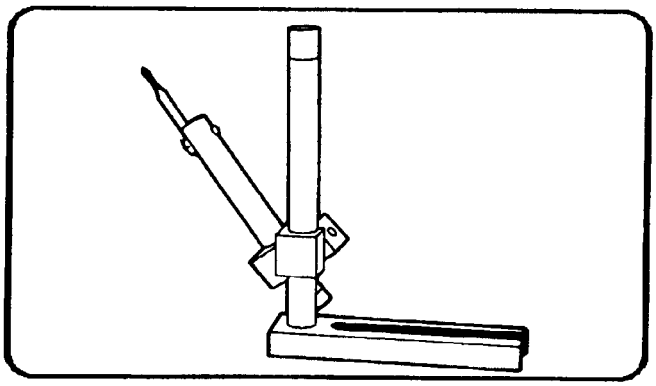

Figure 9-5. Tooth stop rest.

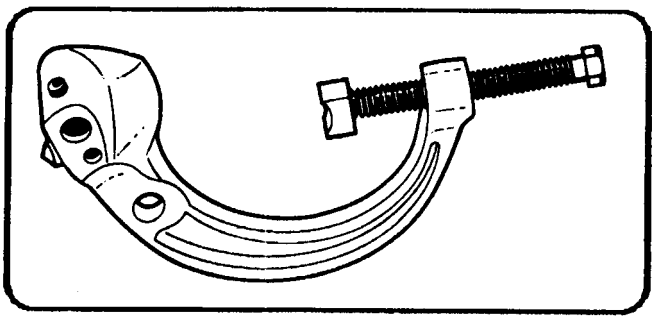

Figure 9-6. Diamond dresser.

Diamond Dresser

The diamond dresser (Figure 9-6) is used with all Versa-Mil grinding attachments and clamps to the workpiece, tailstock, or lathe face plate to true the grinding wheel. A 0.35-karat industrial diamond mounts in either of two positions to dress the face or side of the grinding wheel. The cast-iron frame with V-notch clamps securely to round shapes up to 3 1/2 inches in diameter.

Universal Milling Head

The universal milling head (Figure 9-7) mounts to the face of the Versa-Mil and is driven by the spindle of the basic unit. This feature eliminates the need for special belts and permits the head to operate at any angle. The milling head and the basic unit have the same spindle taper and use the same arbors. With the universal head, machining can be performed along the side of the work, allowing the machining of much larger parts. Angular operations such as thread milling can easily be performed on large diameter material using the universal head.

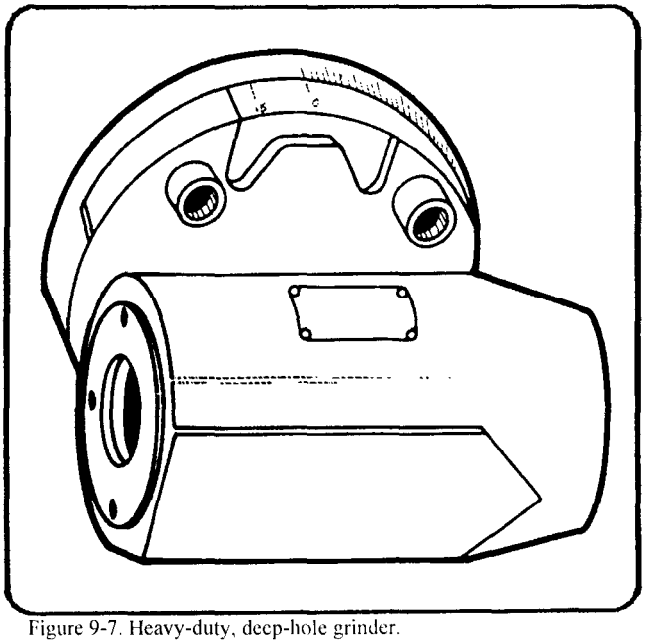

Figure 9-7. Heavy-duty, deep-hole grinder.

Internal Keyseater and Slotter

This unit bolts to the face of the Versa-Mil and is driven by the basic unit spindle. The An internal keyseater and slotter (Figure 9-8) commonly called a "Versa-Shaper," bolts to the face of the Versa-Mil Versa-Shaper operates in any angular position and in either direction of stroke for cutting internal keyways, slotting, or shaping. Thestroke length adjusts from 0 to 4 inches with a speed of 44 to 450 strokes per minute. Tool holders for l/8", 3/16", 1/4", 5/16", and 1/2" cutters are available for use in the Versa-Shaper.

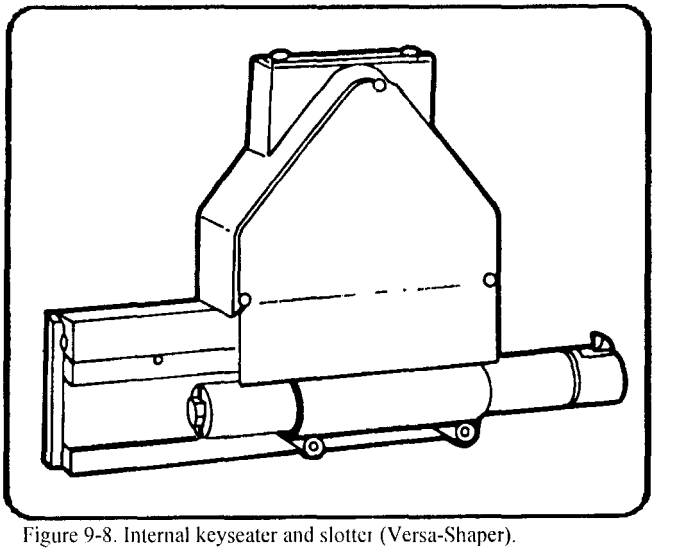

Figure 9-8. Internal keyseater and slotter (Versa-Shaper).

HIGH-SPEED END MILLING

For speeds higher than the basic unit can provide, a high-speed end milling and drilling head (Figure 9-9) bolts to the face of the Versa-M il. The head rotates 30° in either direction from center. Graduation marks on the face of the basic unit indicate the angle setting. Thirteen spindle speeds are available to the head directly from the motor through the use of a V-belt and pulleys. Arbors may be mounted in either end of the high-speed head. The spindle taper is the same as the basic unit. The high-speed head is used mostly for small diameter work such as end milling, drilling, or other related operations.

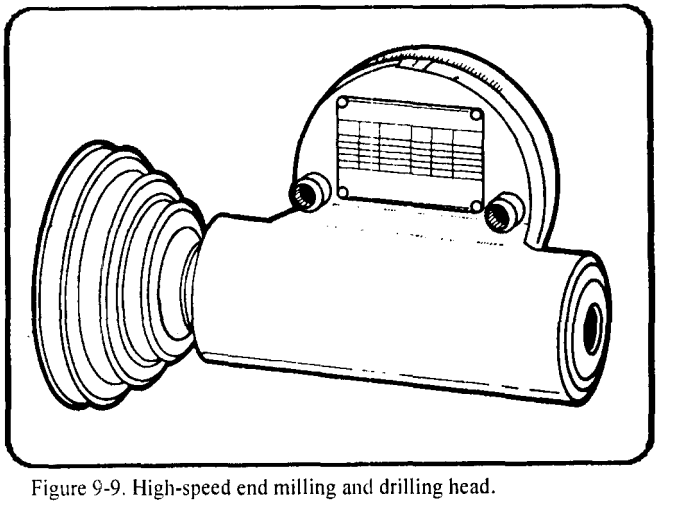

Figure 9-9. High-speed end milling and drilling head.

Indexing Head

The indexing head (Figure 9-10) mounts in the lathe head stock spindle to index work held in the lathe chuck, collet, or between lathe centers. The indexing head mandrel locks into a 1 1/8-inch or larger spindle bore; however, adapters for other bores are available. Forty turns of the dividing head crank rotates the lathe spindle one revolution. The indexing plate has 18 circles of holes allowing for divisions to be made in degrees, number of sides, or the number of teeth on gears or splines.

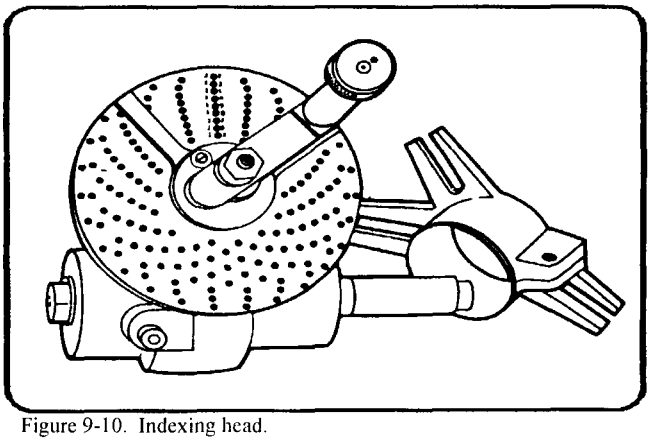

Figure 9-10. Indexing head.

T-Slot Mounting Adapter

Versa-Mil units are furnished with an adapter (Figure 9-11) that fits the T-slot of the compound rest on most conventional lathes to lock the Versa-Mil unit to the compound rest with two hex-head bolts. Four holes in the base of the Versa-Mil unit allow mounting the basic unit in any of four positions 90° apart. Mounting the basic unit by this method permits the use of the compound rest for angular movement where low mounting of the Versa-Mil is not required. Any operation normally done above the centerline of the workpiece is usually accomplished by using the T-slot adapter and the compound rest. Such operations include milling keyways, slots, and splines, angle milling, and gear cutting. Other operations such as drilling or boring may also be accomplished if they are performed above the center line of the work.

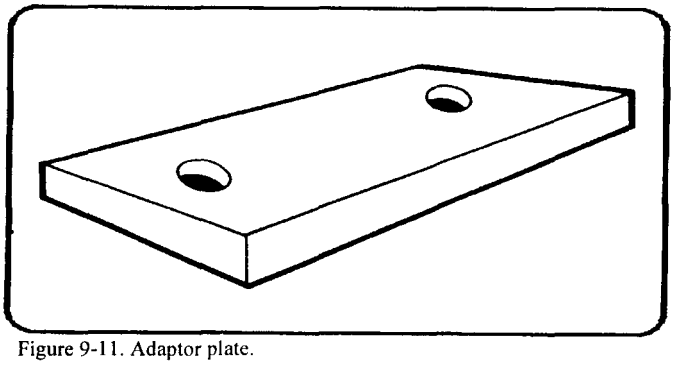

Figure 9-11. Adaptor plate.

Adapter Base Mounting

When a lower mounting of the Versa-Mil unit is required, the compound rest can be removed and replaced with a special adapter base (Figure 9- 12) that mounts directly on the cross-slide. The base plates are semifinished and may require drilling two mounting bolt holes and a pivot pin hole. The location of these holes depends upon the lathe model and size. The base plate adapter should be used for operations on or below the centerline of the workpiece. Such operations include milling keyways along the side of a shaft, surface milling with a shell end mill, and drilling or boring on the centerline of the workpiece. The compound rest must be removed prior to mounting the base plate adapter.

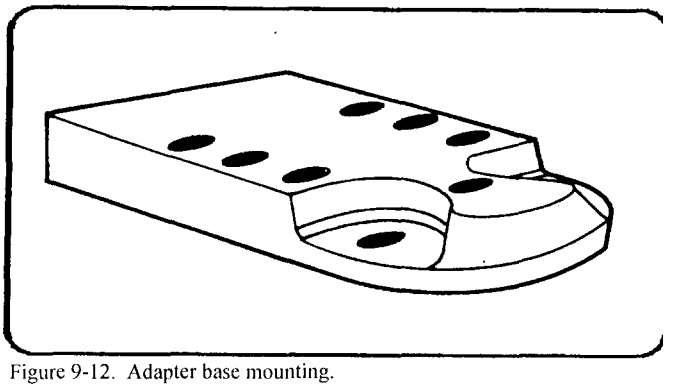

Figure 9-12. Adapter base mounting.

FEED TABLES

Although not part of the basic unit accessories, the feed table may be found in some shop sets. Rigid accurate feed tables (Figure 9-13) make the Versa-Mil unit a portable machine tool by providing two additional directions of. travel. Precision finished ways, adjustable gibs. and accurate lead screws calibrated to 0.001 inch assure accurate positioning and feed for the most precise machining. Feed tables for Versa-Mil units are available in four different models and all feed tables can be quickly converted to reduce table height when only one direction of travel is required.

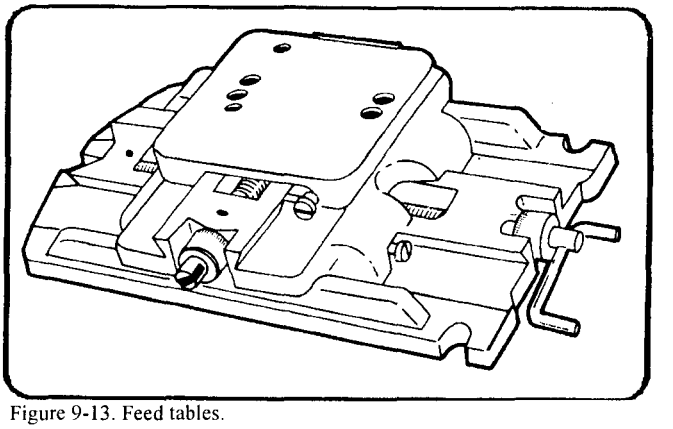

Figure 9-13. Feed tables.

Machining done on the lathe with a Versa-Mil allows the cutter to move along three different axes: vertical, lateral, and longitudinal (x, y, z). However, not all machining can be done using the lathe. Because the lathe allows longitudinal and lateral movement, mounting the Versa-Mil directly to a bench or piece of equipment would severely restrict its machining capabilities. Feed tables eliminate that restriction by providing those two additional directions of travel. Feed tables mounted directly to a bench or piece of equipment allow the Versa-Mil to perform machining in all three directions.

SELECTION OF ARBORS

When the basic unit is to be used independently or with an attachment other than the grinding attachments, an arbor and cutter must be selected and mounted. The cutter should be mounted onto the arbor first. The arbor should be secured in a vise to properly mount the cutter.

This ensures a properly torqued cutter and prevents the arbor from bending or causing damage to the Versa-Mil basic unit. When tightening the arbor nut, the pressure applied to the wrench should always be in the direction of the operator in case of slippage. Listed in the following paragraphs are various arbor styles and some of their uses. Note that they are similar to, but smaller than those used on a milling machine. Refer to chapter 8 for illustrations not listed.

Taper Arbors

Taper arbors (Figure 9-14) are designed primarily for use with Brown and Sharpe, or Morse standard taper shank tools.

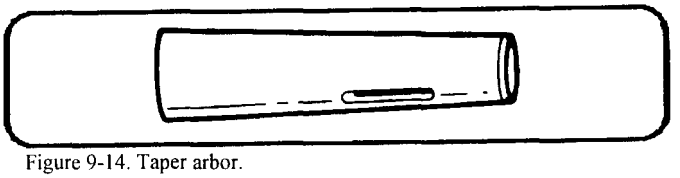

Figure 9-14. Taper arbor.

Fly-Cutting Arbor

The fly-cutting arbor may be used for boring, facing, gear repair, keyway milling, and form milling. This type of arbor allows the tool bit to be positioned at either 45° or 90° to the arbor axis.

Side-Milling Arbor

The side-milling arbor (Figure 9-15) is used with arbor-type cutters and slitting saws. This arbor is supplied with 1/8” and 3/8” spacing collars.

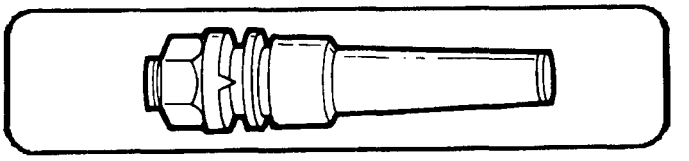

Figure 9-15. Side milling arbor.

Shell End Mill Arbor

The shell end milling arbor is used primarily for facing; however, milling a wide slot with a shell end mill can be accomplished.

Geared Chuck Arbor

This type of arbor is used for mounting chucks with a #3 Jacobs taper. The chuck itself is used primarily for drilling.

Straight Shank Arbor

The straight shank arbor with setscrews is used with straight shank drills of the correct size, end mills, and Woodruff key seat cutters.

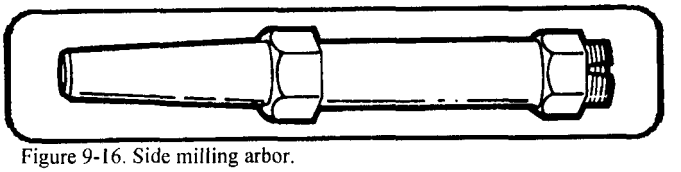

Figure 9-16. Side milling arbor.

Straddle Mill Arbor

The straddle mill arbor is used for milling splines on a shaft, milling hexagon or square shapes, and large keyways. Six spacers come with the Versa-Mil accessories, allowing milling of areas from 1/8 to 3 inches wide in 1/16 inch increments.

Threaded Angle Mill Arbor

The threaded angle mill arbor is used for milling angular grooves and dovetails.

SELECTION OF CUTTERS

After selecting the arbor, select the desired cutter for the machining process, mount the cutter on or in the arbor, and mount the arbor in the Versa-Mil unit or attachment. Ensure the arbor and spindle are free of dirt and burrs.

Woodruff Key Slot Cutters

This cutter has a 1/2-inch straight shank and is used for cutting Woodruff keyslots in a shaft. This cutter may also be used for cutting straight keyways in a shaft or similar operations.

Side Cutters

Side cutters are available in two basic styles. The stagger tooth side milling cutter should be selected for milling keyways and deeply milled slots, while the straight side milling cutters are usually used in matched sets for straddle milling or individually for side milling.

Shell End Mill Cutter

This cutter is used for slabbing or surfacing cuts and end or face milling.

Form Cutters

Form cutters are manufactured in a variety of shapes. Selection of the cutter depends upon the desired shape or form to be machined.

Fly Cutters

Fly cutters are usually square tool bits ground with the proper clearances for boring, facing, or counterboring. Fly cutters can also be ground to particular shapes for special jobs such as gear repair or spline milling.

END MILLS

End mills are manufactured in a variety of shapes and styles and should be selected in accordance with the job to be performed. The two fluted end mills are recommended for cutting keyways and for deep milling while the multiple flute end mills are designed for end milling and routing work.

SLITTING SAWS

Slitting saws are manufactured in a variety of styles and sizes and should be selected in accordance with the job to be performed. Use slitting saws to cut deep slots in the work and for cutting slots.

SELECTION OF GRINDING WHEELS

When the external grinding head, internal grinding head, or deep-hole grinding head is selected and mounted on the Versa-Mil, a wide range of grinding operations is made available. The data books published by the leading abrasive manufactures should be referred to for proper selection of grinding wheels as the variety of grinding done by Versa-Mil is to great for complete coverage of wheels in this manual.

WARNING

Use only abrasive wheels designed for the external or internal grinding heads that have been tested and found to be safe when operating at the speeds attained by these heads. Using incorrect untested wheels may result in breaking the abrasive wheel causing wheel fragments to be projected into the work area endangering personnel and equipment.

Straight Abrasive Wheels

Straight abrasive wheels are furnished in 46 and 60 grit sizes. The 46 grit wheel is a general-purpose wheel and should be selected for rough-grinding cylindrical parts, face plate grinding, and so forth. Select the 60 grit wheel for finishing and for tool and cutter grinding where finer finishes are required.

Straight Cup Wheels

Select a straight cup wheel should be selected for tool and cutter grinding, face plate grinding, and internal grinding of large holes.

Flare Cup Wheels

Select a flare cup wheel for general tool and cutter grinding.

Dish Wheels

Select a dish wheel for tool and cutter grinding such as grinding flutes and individual teeth of milling cutters.

VERSA-MIL OPERATIONS

SETUP

The Versa-Mil adds important machining functions to a lathe. With built-in power and vertical feed, it adds a third machining dimension, allowing the operator to mill, drill, bore, slot, shape, grind, and perform other special operations. The success of any Versa-Mil operation depends largely upon the judgment of the operator in setting up the Versa-Mil, selecting the proper cutter, and holding the cutter by the best means possible under the circumstances.

Preoperational Checks

Gibs should be as snug as possible and still allow the movement needed. Tighten all gibs not required for the operation being done to prevent movement and chatter. The adjusting bar on the back of the lathe carriage that holds the carriage onto the lathe bed should be snug enough to still allow a slight drag when feeding the lathe carriage. If the work is held between centers, they should be tight against the work and long pieces should be supported at the point where machining is being done. Unless both the Versa-Mil and the work are rigidly supported, it is difficult to obtain accurate results.

Mounting on a Lathe

The Versa-Mil may be mounted on the front or the rear of the lathe carriage. On the front, it may be set on the compound rest or directly on the cross slide. A more permanent and generally more useful mounting is at the rear of the lathe carriage, where it may be left until it is needed.

Squaring the Versa-Mil to the Lathe

For accurate milling cuts, it is necessary to square the Versa-Mil to the lathe (Figure 9-17). The front compound face of the Versa-Mil is a reference surface machined in relation to the spindle. A square can be set across this face and squared to the chuck or face plate of the lathe. For work between centers, the Versa-Mil can be squared to the workpiece. After the machine has been squared on the compound rest of the lathe, the compound rest can be loosened for adjusting the spindle to various angles using the graduated scale on the compound rest. For extremely precise adjustments and settings, use the dial indicator or vernier protractor.

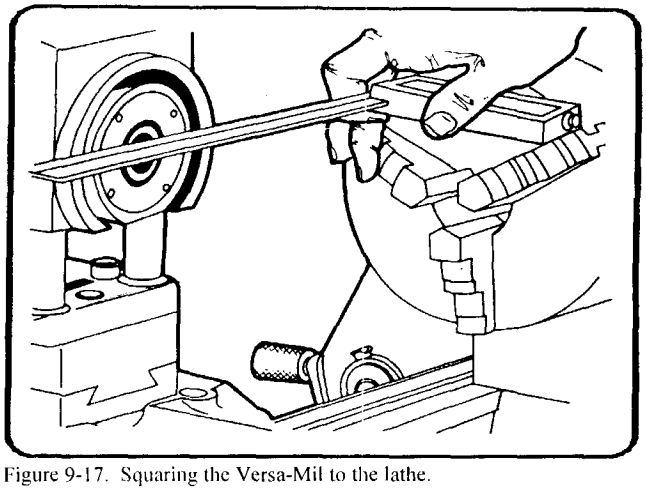

Figure 9-17. Squaring the Versa-Mil to the lathe.

MILLING SQUARE END KEYWAYS

Conventional milling is recolmmended when using the Versa-Mil on a lathe as the lathe's feeds and bearings are not designed for upward pressure on the carriage. Cutting square end keyways (Figure 9-18) can be accomplished with the Versa-Mil using a variety of different cutters and speeds. The Versa-Mil is usually set on top of the compound rest with the spindle of the Versa-Mil parallel with the travel of the compound rest. Select and mount the cutter to the appropriate arbor. A stagger tooth side milling cutter the width of the keyway is the most satisfactory cutter to use for square end keyway milling operations; however, plain milling cutters may be used. Mount the arbor into the Versa-Mil spindle and tighten.

CAUTION Do not over tighten as the pin in the back of the Versa Mil may shear

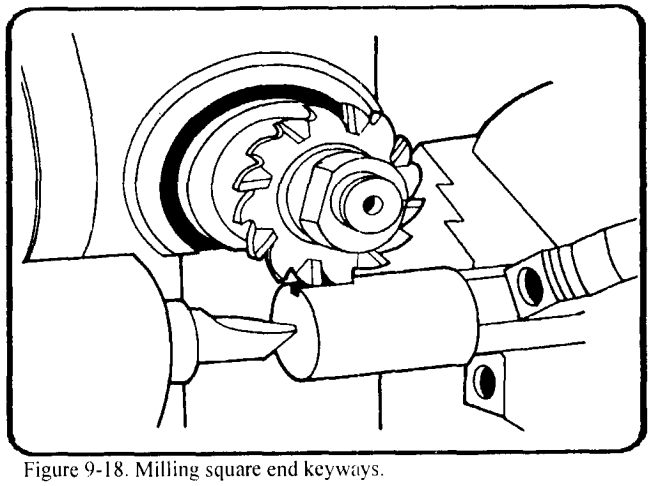

Figure 9-18. Milling square end keyways.

Speed Selection

If a good flow of coolant is available to the cutter, choose or select speeds near the top of the recommended cutting speeds for the operation being performed, type of cutter used, and material being milled. If milling is to be done dry, then use a speed at the lower end of the recommended cutting speeds.

Centering the Cutter

To center the cutter over the work, tirst ensure the backlash is removed from the cross slide. Next, start the Versa-Mil and reference the cutter to the side of the work using a paper shim. Zero the cross feed dial; then, raise the Versa--Mil above the top of the work. To determine the distance the cutter must move, add one-half of the diameter of the cutter plus one-half the diameter of the workpiece plus the thickness of the paper shim. Keep in mind some latches only move half the distance shown on the crossfeed dial. After the cutter has been moved over the center of the work lock the cross slide to prevent movement during milling. See Figure 9-19.

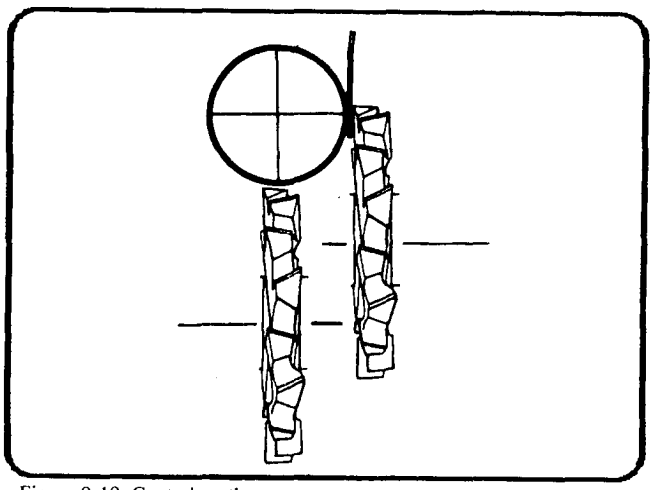

Figure 9-19. Centering the cutter.

Depth of Cut

Start the Versa-Mil and reference the cutter to the top of the workpiece using a paper shim. The depth of cut equals one-half the key thickness plus the chordal height plus the thickness of the paper shim. Tables for chordal height may be found in the new American Machinist's Handbook or Machinery's Handbook. A simple approximate formula for chordal height is key thickness squared, divided by four times the shaft diameter. After the depth of cut is determined and set, tighten the post binding setscrew to prevent the basic unit from moving during machining.

Feed Rate

The rate of feed will vary from 0.001-inch chip thickness per tooth to as much as 0.008 inch per tooth. Determine the feed rate by multiplying the number of teeth on the cutter times the desired chip thickness times the RPM of the cutter. A chip thickness of 0.001 to 0.004 is considered a finishing cut while a chip thickness heavier than 0.004 is considered a roughing cut. Most milling operations involving the Versa-Mil are fed by hand. The operator should attempt to feed the cutter at a consistent rate with each tooth taking the same chip thickness. Power feeding is recommended when long cuts along a shaft or workpiece are necessary. To do this, mount the steady rest on the lathe close to the headstock and clamp the steady rest tightly against the workpiece. Lubricate the headstock center or use a ball bearing type center to allow the headstock spindle to rotate freely while the workpiece remains stationary. If a ball bearing center is not used, maintain low spindle speeds to prevent overheating the work. Feed rates during power feeding are adjusted using of the quick change gearbox on the lead screw.

INTERNAL KEYWAY AND SPLINE CUTTING

After the internal diameter of gears or sleeves have been machined to size, keyways or splines may be cut into the work with the Versa-Shaper without removing the work from the lathe chuck (Figure 9-20). This has a major advantage of saving time by not having to change setups.

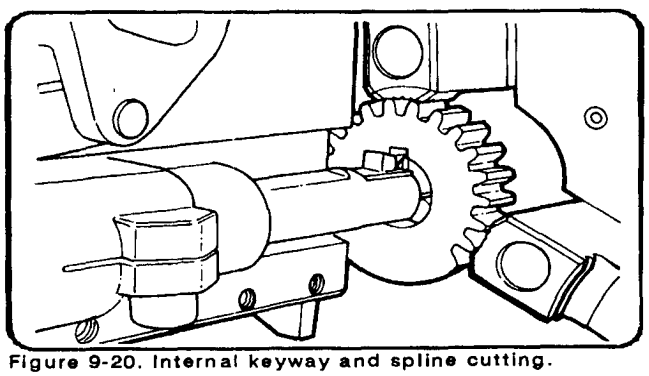

Figure 9-20. Internal keyway and spline cutting.

Sizes of Keyways

Each of the standard widths of keyways from 1/8 to 1/2 inch may be cut with one of the standard keyway cutters available with the Versa-Mil. Wider keyways may be cut with one of the standard cutters by cutting the slot to the proper depth and enlarging it by feeding the cutter first to one side and then the other through the use of the cross slide lead screw.

Depth of Cut

Determine the depth of cut by the amount of feed applied to the basic unit lead screw. However, it is necessary to allow the Versa-Shaper to take additional cuts (free cuts) until no further material is removed before taking a measurement. This will assure accurate keyways or splines being machined in the gear or sleeve.

Direction of Feed

Whenever practical, mill keyways and splines by feeding upward with the Versa-Shaper. This will cause the lathe carriage to be held more firmly in contact with the lathe ways and the lathe bed, permitting heavier cuts to be taken.

Clearance

After the Versa-Shaper is set up, run through the entire stroke cycle turning the worm sheave by hand. This will ensure that the cutter clears the work at both ends and does not strike the lathe chuck or encounter any other obstructions.

PLAIN MILLING

Plain milling or slabbing (Figure 9-21) is a term applied to many operations such as face milling, milling a hex or square shape, or milling flat surfaces along the side of a workpiece. The process of plain milling normally involves removing large amounts of material with either a shell end mill or side milling cutters to form a flat surface. Work may be held either in the lathe chuck or between centers for plain milling.

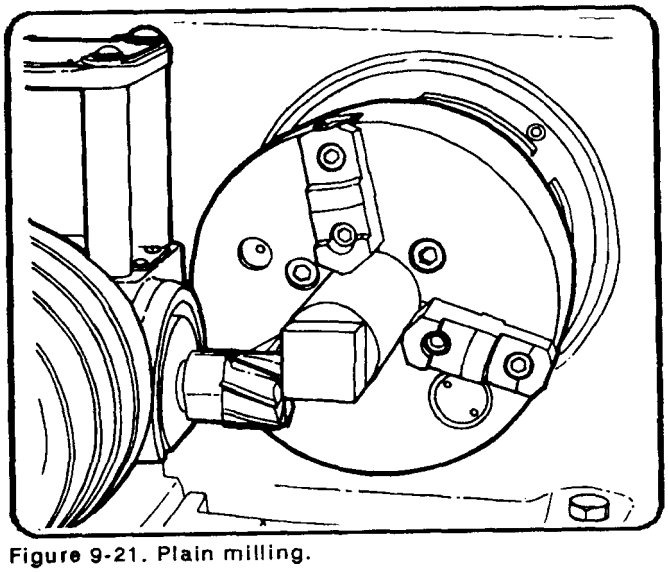

Figure 9-21. Plain milling.

Depth of Cuts

In the case of shell end mills, the depth of cut should not exceed the depth of the teeth or flutes. With side milling cutters, the depth of cut is controlled by the diameter of the cutter. For deep cuts, a staggered tooth, side milling cutter is recommended. Extremely light cuts should be avoided if possible as the cutter tends to slide over the work, heating and dulling the cutter which may result in putting undo pressure on the arbor and carriage causing excessive chatter.

Milling Feeds

The best milling performance is obtained when each tooth of the cutter takes a full chip. When milling steel, for example, the ideal feed is 0.005 inch. Depending on the width of the cutter and machinability of the material, it may be desirable to reduce the depth of cut and increase the rate of feed to maintain chip thickness. Chatter is likely to result when chips are too thin, causing cutter life between grindings to be reduced.

DRILLING

Many drilling and boring operations not ordinarily possible on the lathe are easily performed with the Versa-Mil mounted on the lathe. The Versa-Mil is usually fed by hand using either the either carriage, cross slide, or compound rest. Check the operators manual supplied with the Versa-Mil for information concerning power feeding when drilling.

Off-Center Drilling

Off-center drilling and boring may be performed by positioning the Versa-Mil spindle parallel with the lathe axis and maneuvering the drill by means of the cross slide and the Versa-Mil lead screw. This allows the complete machining of irregularly-shaped items without removing them from the lathe chuck. See Figure 9-22.

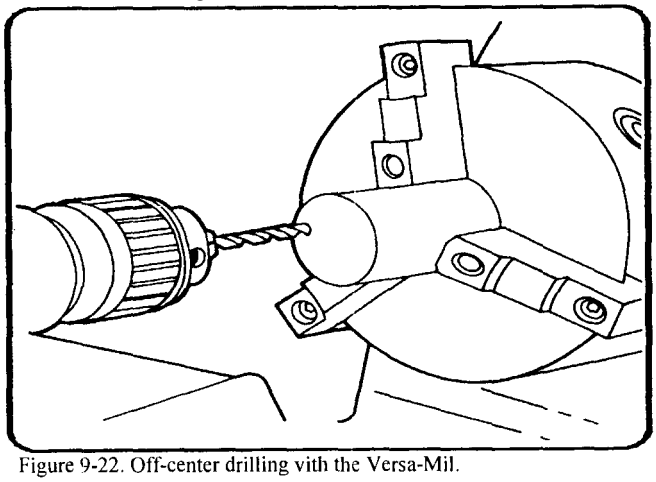

Figure 9-22. Off-center drilling vith the Versa-Mil.

Angular Drilling

With the Versa-Mil mounted on the compound rest, holes may be drilled at any angle in relation to the lathe axis by setting the compound rest at the desired angle and feeding the drill into the work with the compound rest lead screw. To use power feeding with the taper attachment, set the taper attachment and Versa-Mil spindle parallel with the hole to be drilled. The work must be held in position to prevent turning when the lathe carriage feed and head stock spindle are engaged. See Figure 9-23.

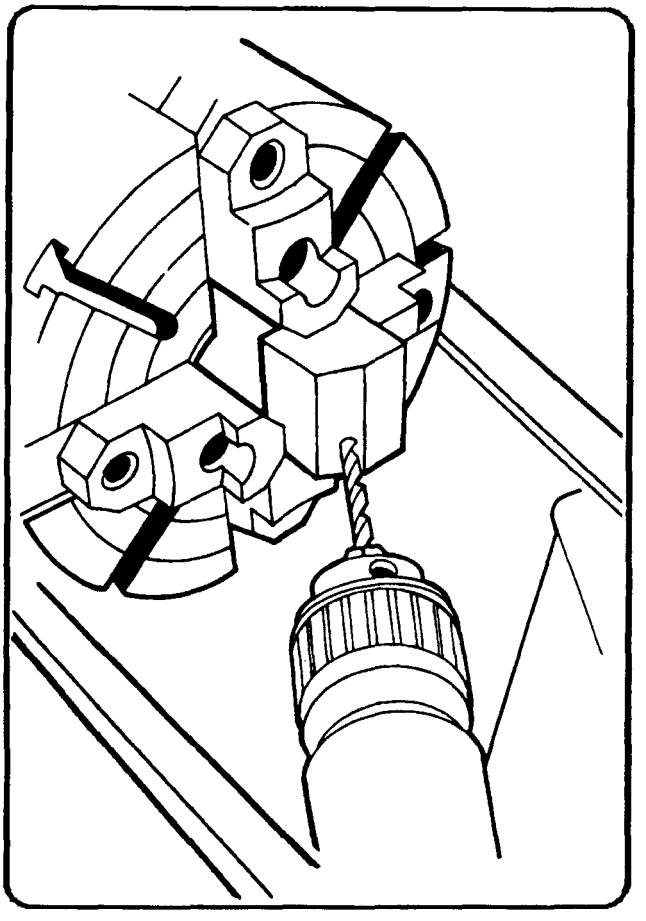

Figure 9-23. Angular drilling with the Versa-Mil.

Index Drilling

Stock held in the lathe chuck or between centers can be drilled at regular intervals around the center or perimeter of a workpiece by using the indexing head to position the work. A considerable amount of setup time and effort is saved after positioning the drill for the first hole to be drilled.

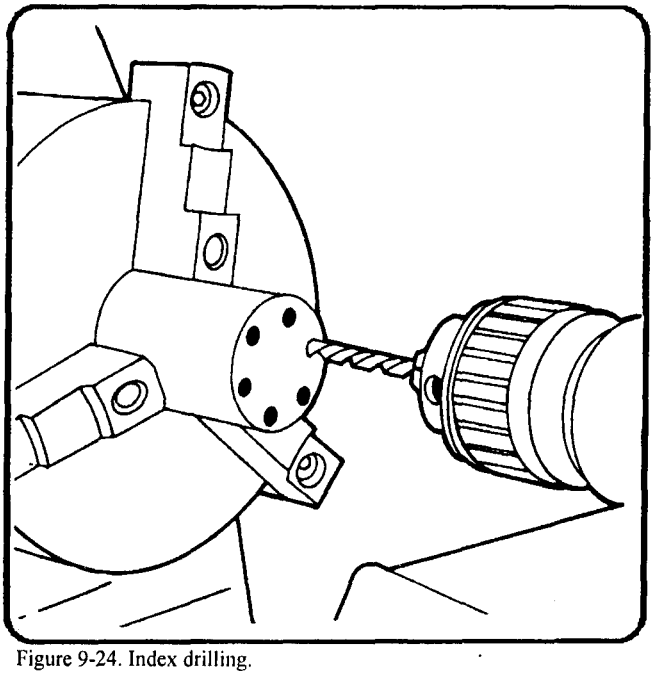

Figure 9-24. Index drilling.

Additional Drilling Applications

Drilling with the Versa-Mil attached to a feed table, turret lathe, or vertical boring mill is unique. Special drilling operations with these pieces of equipment are covered in the operator's manual on the Versa-Mil. See Figure 9-24.

WOODRUFF KEYSLOT MILLING

Milling Woodruff keyslots (Figure 9-25) in shafts is very similar to milling straight keyways in the basic setup, centering the cutter, and feed rate. The only difference in milling a Woodruff keyslot is that the carriage must be locked down in addition to the cross slide, if cutting from the top of the workpiece, to prevent the basic unit from moving during milling. Cutting a Woodruff keyslot is relatively simple since the proper size cutter has the same diameter and width of the key to be inserted. The work may be held in the lathe chuck or between centers and the cutter may be on an arbor or in a drill chuck. After the cutter has been centered on the work, the cutter is fed directly into the work until the proper depth of cut has been achieved.

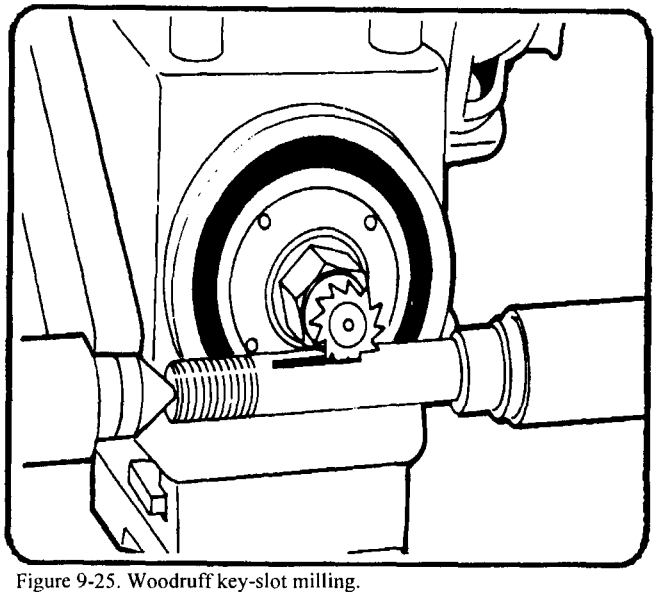

Figure 9-25. Woodruff key-slot milling.

INDEXING

An indexing head comes with the Versa-Mil and is installed on the headstock of the lathe to permit indexing a workpiece. Even though the workpiece is mounted in a conventional manner in the lathe, the headstock spindle should never be allowed to rotate under power with the indexing head attached as this would cause severe damage to the equipment. It is always a good practice to unplug or turn off the main power switch on the lathe in this situation.

Mounting the Workpiece

A workpiece may be supported in the lathe between centers, against the faceplate, or in the lathe chuck. If the work is mounted between centers, a lathe dog is mounted on the work and used to transfer movement from the faceplate to the work.

Indexing the Work

Indexing is the process of controlling the rotational position of a workpiece during machining. The indexing head attaches to the left end of the lathe headstock and locks into the headstock spindle using an expansion adapter. With the indexing head mounted to the lathe, the work will not rotate unless the crank arm of the indexing head is moved. Forty complete turns of the crank arm move the lathe spindle one revolution. The indexing plate contains a series of concentric rings with each ring containing a different number of holes. The workpiece is indexed by moving the crank arm from one hole to another through a calculated pattern of turns and holes. To determine the correct pattern of turns and holes and which ring to use, refer to Chapter 8, Indexing a Workpiece.

FORM MILLING

Form milling is the process of machining special contours, composed of curves and straight lines or entirely of curves, in a single cut. Gear cutting may be considered form milling by definition; however, the definition is usually restricted to the use of convex, concave, or corner rounding cutters. These form cutters are manufactured in a variety of radii and sizes and may be grouped or ganged together on an arbor to mill intricate shapes. Convex (curved or rounded outward) cutters mill concave (curved or rounded inward) shapes while concave cutters are used to mill convex shapes.

ANGLE MILLING

Angle milling is milling flat surfaces which are neither parallel nor perpendicular to the work. Angular milling can be divided into several different types of setups.

Single Angle Milling Cutters

Single angle milling cutters are mounted on an arbor and the arbor is then mounted to the basic unit or universal head. The unit is then squared to the workpiece and the work is milled in a conventional manner. This type of cutter is manufactured in a variety of angles with the most common angles being 45°, 50°, 55°, or 60°.

Dovetail Milling

When cutting dovetails with the Versa-Mil, the workpiece is usually held in the lathe chuck or mounted on a face plate. The tongue or groove of the dovetail is first roughed out using a side milling cutter, after which the angular sides and base are finished with the dovetail cutter. See Figure 9-26.

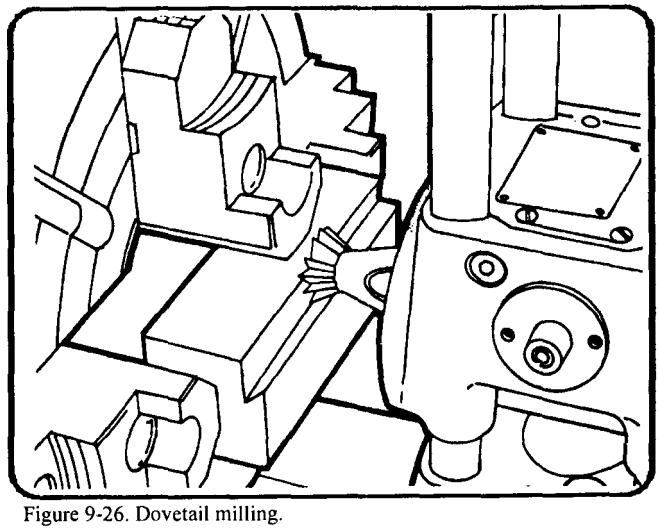

Figure 9-26. Dovetail milling.

Compound Rest

Angular milling may also be accomplished on the Versa-Mil by squaring the Versa-Mil on the compound rest and setting the compound rest to the desired angle. With this method of angular milling, the cutter is usually a shell end mill and the work is either held in the lathe chuck or mounted on the faceplate.

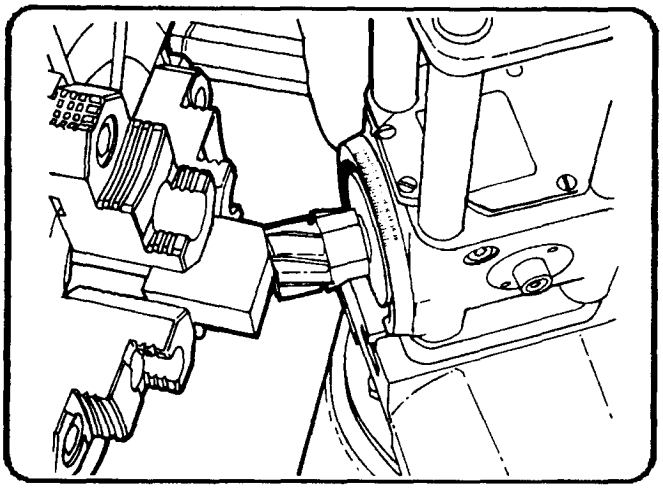

Figure 9-27. Compound rest.

Universal Head

Angles may also be milled on a workpiece using the universal head. This head may be tilted to 180° in either direction of center. Complex angles may be machined with the universal head used in conjunction with the compound rest or the tailstock offset method. See Figure 9-28.

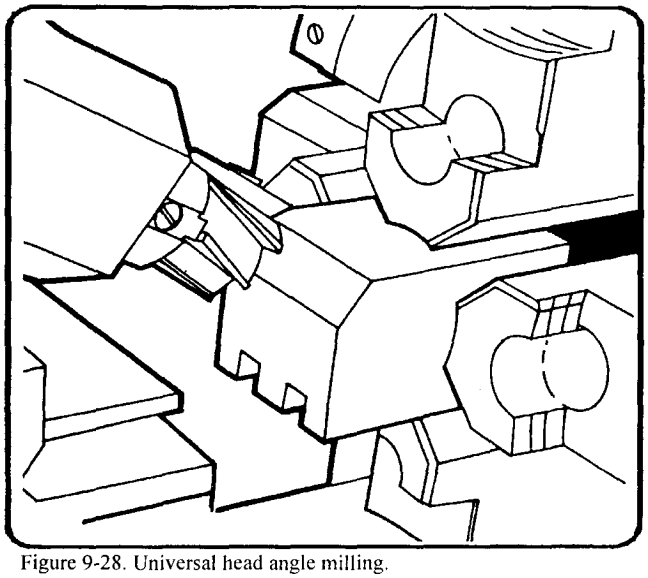

Figure 9-28. Universal head angle milling.

Tailstock Offset

This type of angular milling is accomplished by squaring the unit to the tailstock spindle or faceplate. Normally, a shell end mill is used in this type of milling. Work is mounted between centers and the tailstock is offset to the desired angle for milling. The work may be rotated with the indexing head to mill additional surfaces on the workpiece. See Figure 9-29.

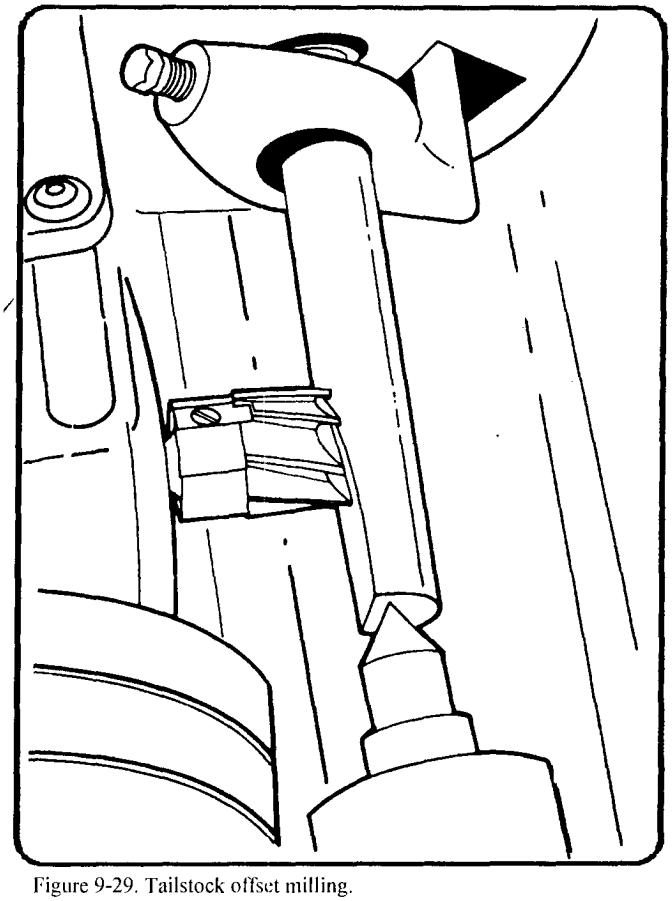

Figure 9-29. Tailstock offset milling.

STRADDLE MILLING

Straddle milling (Figure 9-30) is the machining of two parallel surfaces in a single cut by using two cutters separated by spacers, washers, or shims. Use straddle milling in spline milling or the cutting of squares or hexagons on the end of a cylindrical workpiece. The workpiece is mounted between centers to mill splines on a shaft and mounted in the lathe chuck to mill squares or hexagons. In both cases, the indexing head is used to rotate the work after each cut.

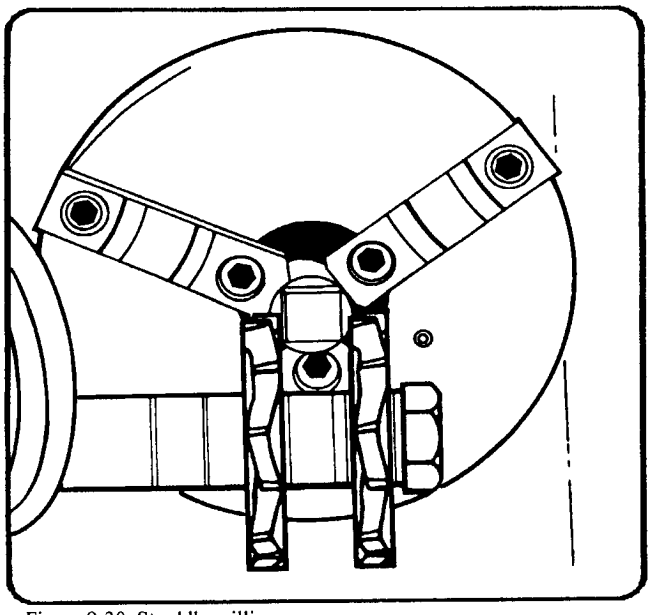

Figure 9-30. Straddle milling.

GANG MILLING

Gang milling differs from straddle milling in that two or more cutters of different diameters or shapes are mounted on the same arbor to mill horizontal surfaces. Cutter combinations in gang milling are virtually unlimited and are determined by the desired shape of the finished product.

SPLINE MILLING (EXTERNAL)

Splines are often used instead of keys and keyways to transmit power from the shaft to a hub or gear. Splines are a series of parallel keys and keyways evenly spaced around a shaft or interior of a hub. Splines allow the hub to slide on the shaft either under load or freely. This feature is found in transmissions, automotive mechanisms, and machine tool drives. Manufactured splines are generally cut by bobbing and broaching; however, this discussion will be limited to field expedient methods. Standard splines on shafts and spline fittings are cut with 4, 6, 10, or 16 splines.

The dimensions depend upon the class of fit and the shaft diameter. The class of fit may be permanent, sliding fit not under load, and sliding fit under load. Table 8-8 in Appendix A lists the standard dimensions for the different classes of fits. Shafts may be milled several different ways.

The most common way is to use two side milling cutters separated by spacers, with the width of the spacers equal to the width of the spline. The splines are cut by straddle milling each spline to the proper depth and indexing around the shaft for each spline. A narrow plain milling cutter is used to mill the spaces between the splines to the proper depth. It may be necessary to make several passes to mill the groove uniformly around the shaft. A formed cutting tool or cutter may also be used for this operation.

SPLINE MILLING (INTERNAL)

After a hub or gear has been drilled and bored to the finished internal minor diameter, internal splines may be cut into the hub or gear by using the Versa-Shaper (Figure 9-31). The indexing head provides the means to locate each spline to be cut. For this operation, the milling is continued until the desired class of fit is obtained. For field expedience, it is best to machine the mating parts to match if possible.

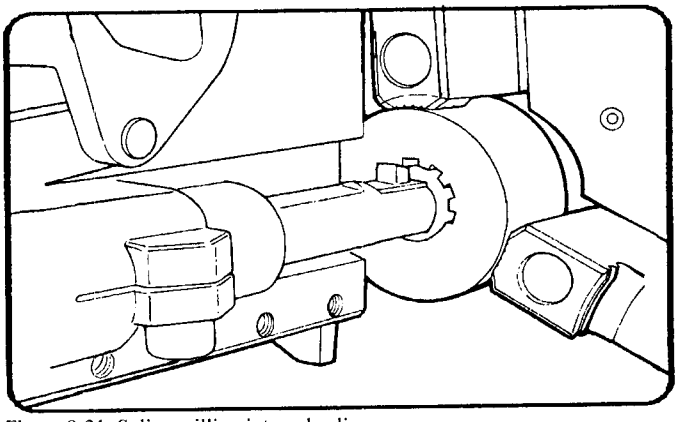

Figure 9-31. Spline milling internal splines.

SLOTTING

Slotting with the Versa-Mil (Figure 9-32) covers a wide variety of operations from milling long wide slots in material to cutting curved or thin slots. Workpieces may be mounted in the lathe chuck or between centers for slotting operation.

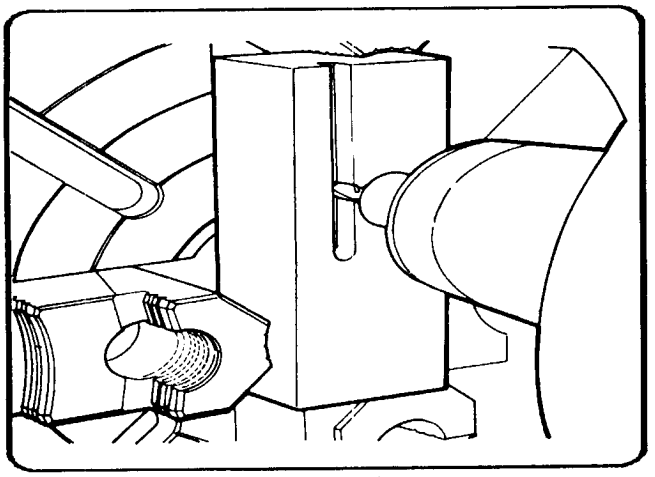

Figure 9-32. Slotting with the Versa-Mil.

Longitudinal Slots

Longitudinal slots along a shaft or other large piece may be cut in the material in the same manner as milling keyways with end mills. It is often desirable to use a cutter smaller than the width of the slot. The reason for this is, when the cutter is as wide as the slot, one side of the cutter is climb milling while the opposite side of the milling cutter is performing conventional milling. This causes a difference in the finish between the two sides of the slot. A roughing out of the slot should be made first, followed by a finishing cut down one side of the slot and returning on the other side.

Narrow Slots

For narrow slots, use slitting saws rather than end milling cutters. When using slitting saws, reduce speeds and feeds to extend the life of the cutter.

FLY CUTTING

Fly cutting (Figure 9-33), also called single-point milling, is one of the most versatile milling operations available to the machinist. Fly cutting is done with a single-point cutting tool, like the lathe or shaper cutting tool, held in a fly cutting arbor. Formed cutters are not always available and there are times when special form cutters are needed only for a very limited number of parts or operations; therefore, it is moreeconomical to grind the desired form on a lathe cutter bit rather than order a special form cutter. The fly cutter is used to great extent in the reshaping of repaired gears because the tool bit can be ground to the shape of gear teeth available. Fly cutting can also be used in cutting standard and special forms of splines.

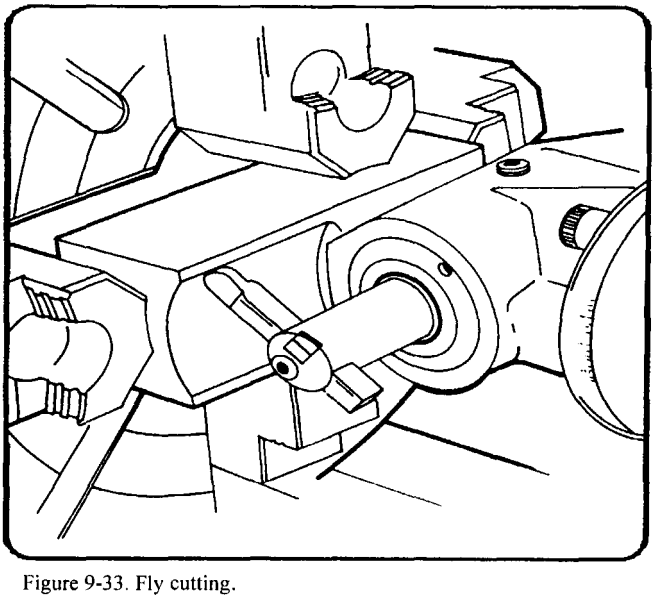

Figure 9-33. Fly cutting.

Plain or Face Milling of Soft Nonferrous Metals

Plain or face milling of soft nonferrous" metals such as aluminum, with a fly cutter produces a high quality finish. Boring holes with a fly cutter is generally not desirable because of the difficulty in positioning the cutter and controlling the diameter. The short arbor allows boring of only very shallow holes.

Gear Cutting

A variety of gears, pinions, and sprockets can be fabricated on the lathe using the Versa-M il. By referring to various texts and references for detailed data and instructions on gears and gear cutting, the operator can develop different methods of mounting the Versa-Mil to the lathe to perform gear cutting. The basic unit and the indexing head are the two basic elements needed to cut gears. When large diameter gears need to be cut, the universal head is used to mill the side of the gear.

Spur gears are the most common type of gear used in the field and the correct cutter to use for this type of gear is determined by the pitch of the teeth and the number of teeth required. Standard cutter catalogs supply the data necessary to select the correct cutter.

Gear Cutting with the Basic Unit and an Involute Gear Cutter

In this setup, Figure 9-34, the gear blank is first turned to the correct diameter using a mandrel mounted between centers. The blank should remain on the mandrel after turning. The lathe dog should be wedged against the faceplate to eliminate backlash and the indexing head mounted to the lathe spindle to position the individual teeth. The basic unit is mounted on the compound rest with the faceplate parallel to the lathe center and an arbor with an involute gear cutter, stamped with the correct pitch and number of teeth, is installed in the basic unit. After the cutter is positioned, lock down the cross feed by tightening the gibs. When the correct depth is reached, tighten the post locking screw on the basic unit. The cutter is then fed into the blank by hand using the lathe carriage wheel.

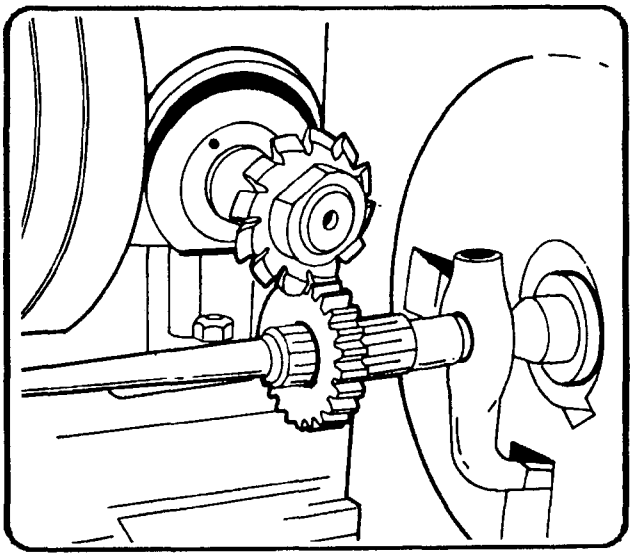

Figure 9-34. Gear cutting with an involute gear cutter.

Gear Cutting with the Basic Unit and a Fly Cutter

When an involute gear cutter is not available or delay in obtaining one is too great, a fly cutter is used. The only difference is that a fly cutter with a 5/16-inch square tool bit, ground to the correct shape, is used instead of an involute gear cutter. See Figure 9-35.

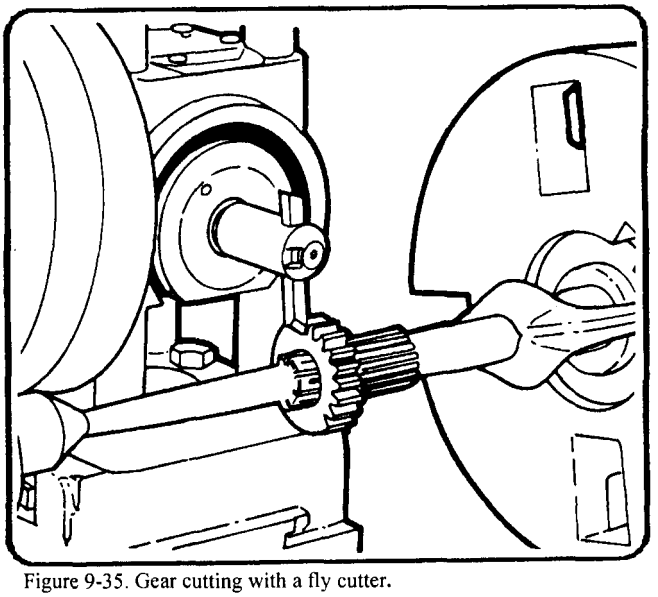

Figure 9-35. Gear cutting with a fly cutter.

Gear Cutting with a Universal Head

Used this setup with either a fly cutter or an involute gear cutter on gear blanks larger than 8 inches in diameter. See Figure 9-36.

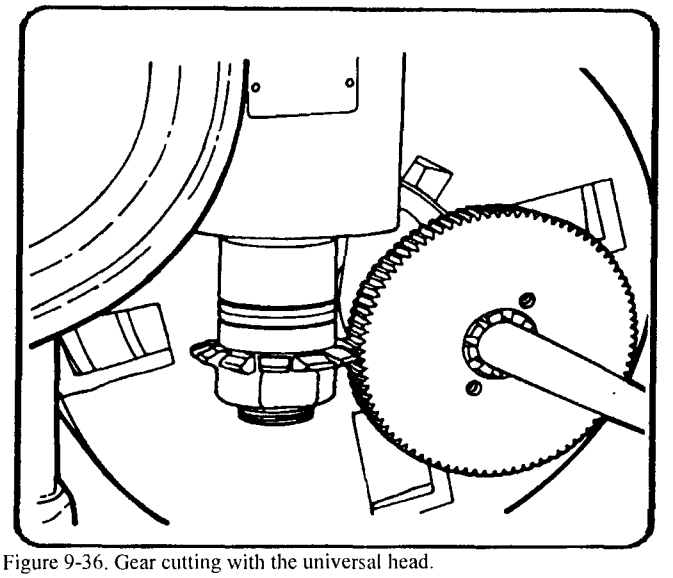

Figure 9-36. Gear cutting with the universal head.

WHEEL DRESSING

Wheel dressing (Figure 9-37) with the diamond dresser is a must for accurate precision grinding. Dress wheels before starting any grinding job and again prior to the finishing cut. The diamond dresser is the most efficient type of wheel dresser for truing wheels used in precision grinding. The diamond point is the only usable part of the diamond and must be inspected frequently for wear. Rotate the diamond slightly in the holder between dressings to keep the point sharp. A dull diamond will press the wheel cuttings into the bonded ores of the wheel, increasing the wheel's hardness. When truing the wheel, the diamond should be centered on the wheel and slanted between 5° and 15° in the direction of wheel rotation to prevent chatter and gouging.

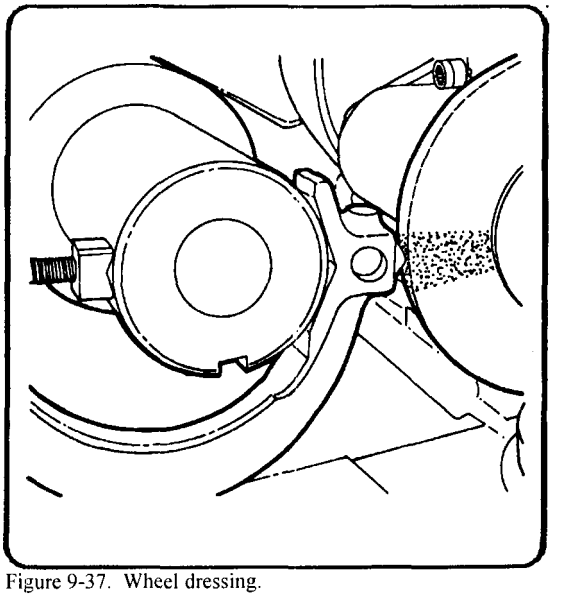

Figure 9-37. Wheel dressing.

The grinding wheel should rotate at or slightly less than operating speed when truing or dressing, never at a higher speed After truing, slightly round the edges of the wheel with an oilstone to prevent the wheel from chipping, unless the work requires sharp comers. Start the dressing process at the highest spot on the wheel, normally the center, and feed at a uniform rate with a 0.002 inch depth of cut per pass. Too slow a feed will glaze the wheel while too fast a feed rate will leave dresser marks on the wheel.

GRINDING

A wide range of grinding is made available to the machinist by using the Versa-Mil and the different grinding heads supplied with the unit. Refer to references published by the leading abrasive manufacturers when selecting the proper wheel for the job being performed. For maximum metal removal and minimum wheel wear, surface speeds of the grinding wheel should be near the highest allowable speed for the wheel size. Light cuts at full speed will remove metal faster than deep cuts at slow speeds. In general, rough cuts average 0.002 inch per pass, while finishing cuts average 0.0005 inch. The spindle rotation should be selected to throw wheel and metal debris away from the operator. When movement of the work is required during grinding, the work and the wheel should rotate in the same direction. This allows the wheel and work to move in opposite directions at the point of contact. The precision grinding may be done either wet or dry.

GRINDING LATHE CENTERS

Before grinding work between centers takes place the centers should be ground true (Figure 9-38). With the center mounted in the lathe headstock, mount the Versa-Mil on the compound rest and set the compound rest at one-half the included angle of the center. Grind the center by feeding the compound lead screw by hand at a uniform rate of feed.

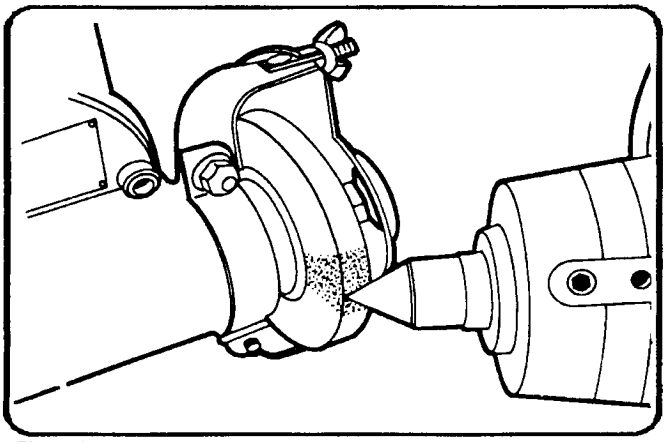

Figure 9-38. Grinding lathe centers.

CYLINDRICAL GRINDING

The lengths and diameters of shafts ground on a lathe are determined by the lathe swing and the distance between the lathe centers. Mount the Versa-Mil on the compound rest with the face of the basic unit parallel to the work surface. In cylindrical grinding (Figure 9-39), the work rotates slowly while the wheel rotates close to the highest allowable speed. The wheel should never leave the work at either end of the cut in order to produce a smooth surface free of wheel marks. Direct the spark pattern downward onto a dampened cloth to prevent very small particles of material from getting into and destroying machined surfaces. A spark pattern directed downward and away from the operator indicates the wheel is too low on the work, while a spark pattern that is directed downward and toward the operator indicates the wheel is too high on the work. Conical grinding can be accomplished with either the taper attachment or by the tailstock offset method.

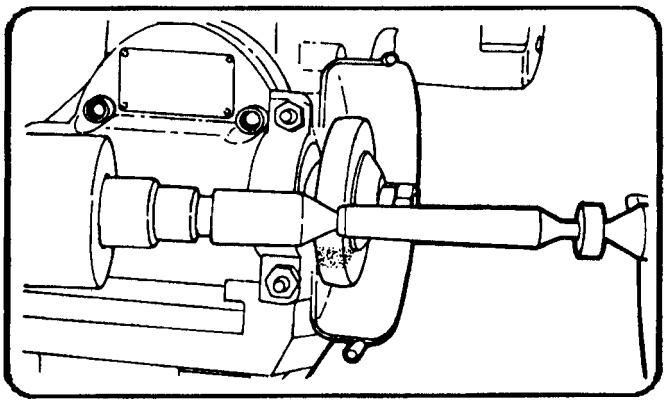

Figure 9-39. Cylindrical grinding.

INTERNAL GRINDING

Holes and bores as deep as 18 inches may be internally ground using the Versa-Mil. The diameter of the hole may be any size larger than 3/4 inch. Either the internal grinder with the taper spindle or the deep-hole grinder may be used, depending on the hole dimensions. Internal grinding differs from external grinding basically in one area. The surface contact between the work and the wheel is much greater in internal grinding, causing the wheel to load and glaze much more quickly. This loading or glazing will cause unnecessary vibration and produce a poor surface finish. A coarser wheel grain structure, which provides better chip clearance, or a softer wheel that will break down more easily, should be used for internal grinding. While grinding, the wheel should clear the end of the work at least one half the wheel thickness but not more than two thirds. If the wheel is allowed to clear the end of the work entirely, a bell-shaped effect will be produced.

Tapered Spindle Grinder

For shallow and small diameter holes up to 6 inches in depth, use the tapered spindle internal grinder. Tapers may also be ground on the work by using either the taper attachment or the compound rest. See Figure 9-40.

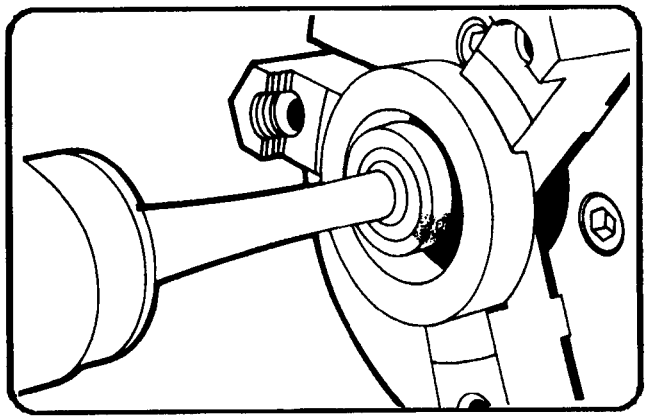

Figure 9-40. Tapered spindle grinder.

Deep Hole Grinder

The deep-hole grinder with the extended housing offers a rigid precision grinder for holes as deep as 18 inches. Tapers may also be ground with the deep-hole grinder. See Figure 9-41.

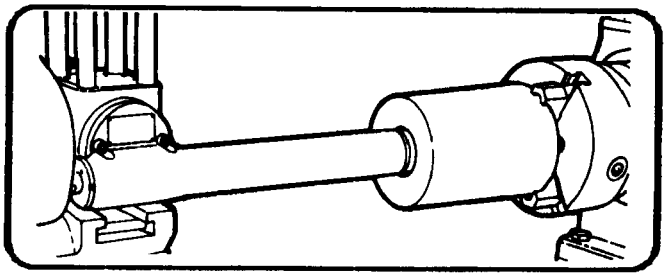

Figure 9-41. Deep-hole grinder.

Versa Grinder Head

The Versa-Mil external grinder with the wheel guard removed may be used for internal grinding of large bored pieces if a considerable amount of stock must be removed and the hole depth does not exceed the unit clearance. This setup permits the operator to grind internally, externally, and face in one setup, assuring a true relation between the three different surfaces. See Figure 9-42.

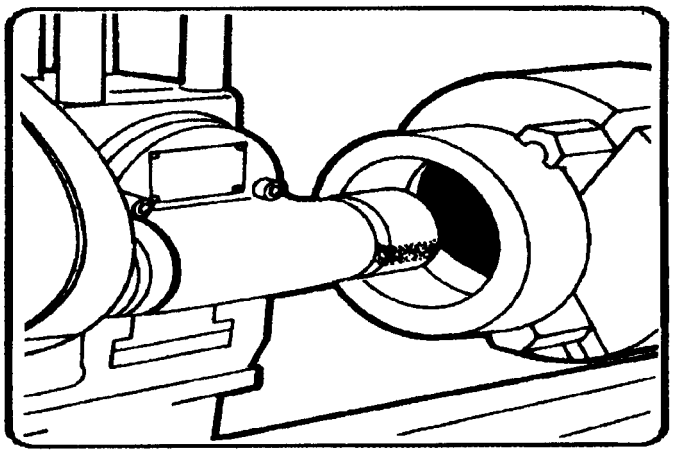

Figure 9-42. Versa grinder head.

SPECIAL OPERATIONS

TOOL GRINDING

The Versa-Mil mounted on the compound rest of a lathe will duplicate the full range of tool and cutter grinding offered by conventional tool grinders. For successful results, the lathe should be in excellent operating condition and preferably small in size to permit the close setting of feeds and angles. Versa-Mil spindles use precision, spring-loaded duplex bearings to eliminate play in the grinding wheel forsuccessful tool grinding. The Versa-Mil tool rest is solidly constructed to provide rigid support with a tip that is designed for smooth, solid contact under the teeth or flutes of the tool being ground. The operator familiar with tool grinding and the use of the Versa-Mil soon develops methods for grinding the various types and forms of cutters. Tool grinding cannot be completely covered in this manual, and it is suggested that reference material covering tool grinding be consulted for complete detailed instructions.

Selection of Grinding Wheels

Grinding wheels should be in the medium grit range for tool and cutter grinding. The shape of the cutting tool will determine which wheel design to use. Abrasive manufacturers' catalogs should be referred to for proper wheel selection.

Depth of Cut

Light traversed cuts should be used to avoid overheating and burning the cutting edge of the tool. Dry grinding is recommended for sharpening high speed steel because coolant removes heat from the cutting edge too quickly causing cracking.

Direction of Wheel Rotation

It is generally safer to have the wheel rotate off and away from the tool cutting edge. This allows the tooth rest to position the tooth and prevent the cutter from turning. This method, however, has some drawbacks, in that the heat from grinding is directed toward the tool cutting edge and leaves a burr which must be removed with an oilstone.

TOOL SHARPENING

The efficiency of a cutter is determined by the sharpness of its cutting edge. Therefore, it is important to sharpen a cutter at the first sign of dullness. A dull cutter not only produces a poorly finished surface, but if used continuously, the cutter will need excessive sharpening to restore it to its original efficiency.

Grinding Cutters Cylindrically

Certain types of cutting tools, such as reamers and plain milling cutters, are ground cylindrically to remove warpage from heat treating, to remove nicks, to obtain a specific diameter, or to produce a cutting edge with a slight clearance. When grinding tools or cutters, the work rotates in the opposite direction from that used in conventional grinding. This allows movement in the same direction at the point of contact. Mount the cutter so that the heel of the tooth makes contact with the grinding wheel first, allowing the heel of the tooth to be ground slightly lower than the cutting edge. This clearance will vary slightly depending on the rigidity of the tool being ground and the job setup. The tool to be ground can be held in one of three ways: between centers, on a mandrel, or on a short arbor mounted in the lathe headstock spindle. There are actually two methods of sharpening the cutting edges of individual teeth or flutes found on cutters.

Down Method

In this method, the rotation of the wheel is from the body of the tooth off and away from the cutting edge. The direction of wheel rotation holds the cutter on the tooth but will raise a burr on the cutting edge, which must be removed by stoning. This method has a tendency to draw temper from the metal. See Figure 9-43.

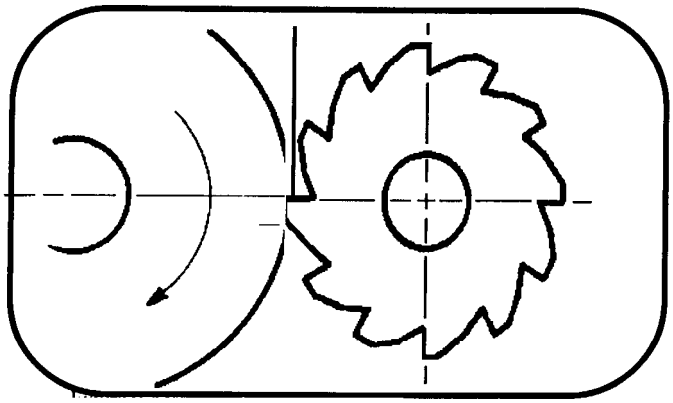

Figure 9-43. Down method.

Up Method

In this method, the wheel rotation is from the cutting edge towards the body of the tooth. With this method, there 'is less danger of burning the tooth. However, the operator must ensure that the cutter is held firmly against the tool rest. If the cutter turns during grinding, the cutter will be ruined.

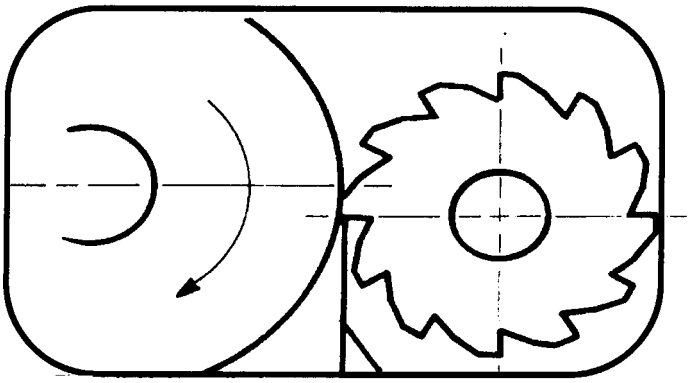

Figure 9-44. Up method.

Cutting Tool Clearance

Correct clearance on the cutting edge of any tool is essential for heat distribution, resistance to wear, and cutting efficiency. Not enough clearance will cause the teeth on the cutter to drag, producing heat caused by friction, and slow cutting. Too much clearance produces chatter and dulls the teeth rapidly. Primary clearance angles are determined by the type of material the cutter wil1 be used on. Secondary clearance angles are usually 3° to 5° more than primary clearance angles. This produces a strong tooth that provides easy control over the width of the cutting land. The width of the land depends on the diameter of the cutter and varies between 1/64 inch to 1/16 inch. When the width of the land becomes too wide after several sharpening, the secondary clearance angle must be ground to restore the land to its original width.

Clearance angles are produced by positioning the wheel, cutter, and tooth rest in different locations. When using the Versa-Mil, it is easier to reposition the wheel by raising or lowering the basic unit. To determine the distance in thousands of an inch, multiply the desired clearance angle by the diameter of the cutter times the constant 0.0088. The constant 0.0088 is the decimal equivalent of the distance moved 10 on the circumference of a l-inch-diameter circle.

EXAMPLE: Using the following formula clearance angle x cutter diameter x 0.0088, a clearance angle of 7° on a 1 1/2-inch-diameter cutter would be 7 x 1.5 x 0.0088, or a movement of 0.0924 of an inch.

Grinding Form Cutters

Formed or eccentricity relieved cutters (such as gear cutters) and concave and convex cutters cannot be sharpened in the same manner as profile cutters. Form cutters have a definite shape that must be retained, even after several sharpening. To retain this shape, only the face of the cutter is ground. Increasing or decreasing the rake on these cutters alters the final shape of the cutter, so care must be taken to ensure that the rake remains at the original angle. The indexing head may be used to assure even spacing of the teeth faces.

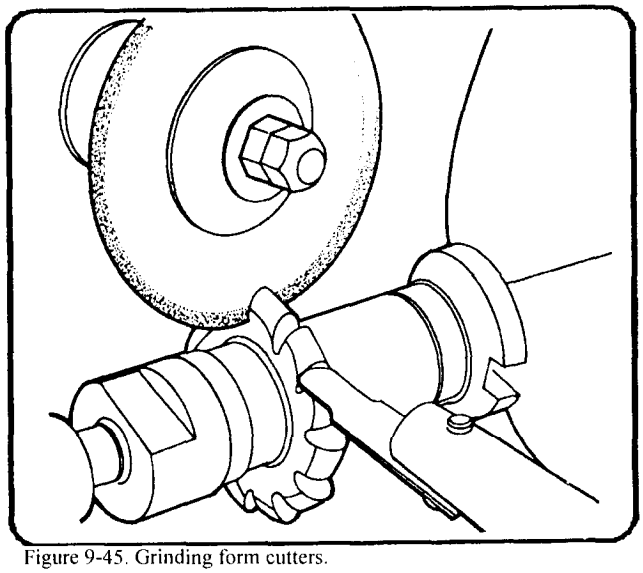

Figure 9-45. Grinding form cutters.

THREAD MILLING

The Versa-Mil with the universal head will enable a lathe to mill threads to full depth and complete profile in a single pass (Figure 9-46). Milling threads saves time and reduces the chance for error over single pointing. USS threads may be cut with standard 60° included angle cutters.

Acme and special form threads are cut with cutters designed for the pitch diameter required. The Versa-Mil will cut internal, external, right-handed, or left-handed threads. Square threads can be cut with an end mill mounted in either the basic or the milling and drilling head.

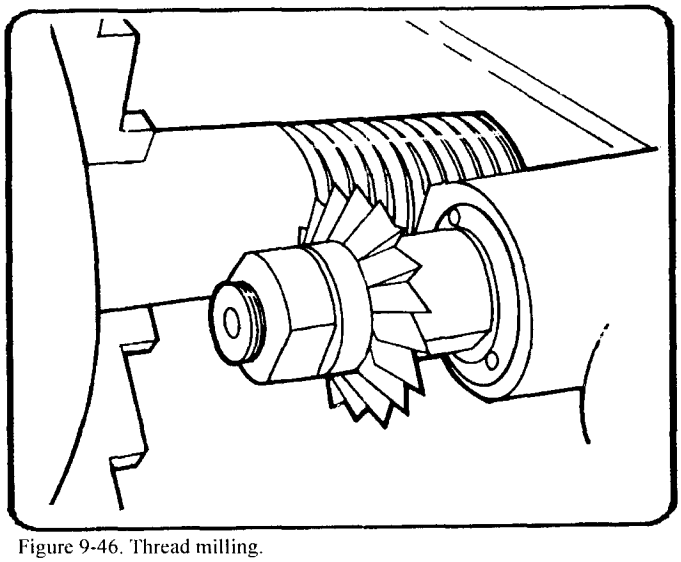

Figure 9-46. Thread milling.

Lathe Preparation

Thread milling speeds and feeds are approximately the same as those used for keyway millillg and slotting. The lathe spindle speeds needed for thread milling are generally lower than those available on standard lathes. It is usually necessary to use a reduction unit mounted to the lathe to obtain the required lathe spindle speed. Large diameter workplaces may require speeds as low as 1/2 or 1/3 RPM. Other than lathe spindle reduction, no other modification of the lathe is needed for thread milling. The quick change gearbox and lead screw are set the same as for single point threading. The indexing head may be mounted to the lathe and used to rotate the lathe spindle when a reduction unit is not available.

Mounting the Versa-Mil

Even though the cutter is at or below the centerline of the work when the basic unit is mounted on the compound rest, it is advisable to mount the unit directly to the cross slide for rigidity.

Supporting the Work

Work of sufficient diameter and rigidity may be supported easily between centers. For long or small diameter work, a steady rest or follower should be used to prevent the work from bending away from the cutter thereby reducing the depth of cut.

Depth of Cut

For external threads, the cutter is fed into the work with the cross feed lead screw. For internal threads, the cutter is fed into the work with the basic unit lead screw. Because thread milling with the Versa-Mil is a one-pass operation, total depth of cut is calculated and set before cutting the thread.

Cutter Rotation

Consideration should be taken when mounting the cutter and selecting the spindle rotation. Conventional milling should be used to put pressure downward onto the carriage. A key may have to be inserted in the arbor to prevent the cutter from loosening the spindle nut.

Accessibility to Work

Because the universal head spindle may be operated in either direction and mounted on either side of the basic unit, threads may be milled at either end of the work and very close to shoulders and flanges.

Helix Angles

The graduations on the basic unit faceplate and the mounting plate of the universal head are used to set the approximate helix angle. Refer to the Versa-Mil operator's manual for helix angles of different threads.

Thread Milling Cutters

Cutters as small as 2 3/4-inches in diameter may be used with the universal head for external thread milling. The cutter diameter for internal threads is governed by the internal diameter of the work. Standard 60° included angle cutters may be modified for use for American Standard Threads by grinding a flat on the point. The width of the flat equals 1/8 the thread pitch and must have relief clearance the same as other cutting tools.

APPENDIX A

TABLES

TABLE 3-1. Proper wire gages for extension cords.

AMPERAGE RATING ON NAMEPLATE	3.5-5.0	5.1-7.0	7.1-12.0	12.1-16.0	16.1-20.0
EXTENSION CORD LENGTH		WIRE GAGES			
25 ft.	18	18	16	14	12
50 ft.	18	16	14	12	10
75 ft.	16	14	12	10	
100 ft.	14	12	10		
150 ft.	12	12			
200 ft.	12	10			
300 ft.	10				

Sizes smaller than wire gage 10 are not normally available as flexiable extension cord.

TABLE 3-2. Selection of abrasive disks.

OPERATION	ABRASIVE DISK	
	GRAIN NO.	TYPE OF COAT
REMOVING RUST	16 to 30	OPEN
REMOVING PAINT	16 to 36	OPEN
SANDING METAL (ROUGH CUTS)	24 to 36	CLOSED
SANDING METAL (MEDIUM CUTS)	36 to 60	CLOSED
SANDING METAL (FINISHING CUTS)	36 to 80	CLOSED
SANDING WOOD (ROUGH CUTS)	16 to 24	OPEN
SANDING WOOD (MEDIUM CUTS)	24 to 50	OPEN
SANDING WOOD (FINISHING CUTS)	60 to 120	OPEN

TABLE 3-3. Recommended use of bandsaw blades.

RECOMENDED USE	THICKNESS OF MATERIAL TO BE CUT	TEETH PER INCH	RECOMENDED USE	THICKNESS OF MATERIAL TO BE CUT	TEETH PER INCH
CARBON STEEL			**ALLOY STEEL**		
High speed cutting of aluminum, brass, copper, soft bronze, magnesium, wood, mild steel and tougher steels at slow speed.	1/2"-3 3/8"	6	High speed cutting of aluminum, brass iron, cast iron, bronze, brass, copper, galvanized pipe, mild steel and tougher steel including chrome and tungsten steels at slower speed.	3/16"-1"	10
High speed cutting of aluminum, brass copper, magnesium, mild steels and tougher steels at slow speed.	3/8"-1"	8	High speed cutting of aluminum, angle iron, cast iron, bronze, brass, copper galvanized pipe, mild steel and tougher steels including chrome, tungsten steels and electric cable at slow speed.	5/32"-3/4"	14
High speed cutting of aluminum, angle iron, cast iron, bronze, brass, copper galvanized pipe, mild steel and tougher steels at slow speed.	3/16"-3/4"	10	High speed cutting of angle iron,bronze brass, copper, galvanized pipe, thin wall tubing, mild steel and tougher steels including chrome and tungsten steels at slow speed.	1/8"-1/2"	18
High speed cutting of aluminum, angle iron, cast iron, bronze, brass, copper, galvanized pipe, mild steel and tougher steels and electric cable at slow speed.	5/32"-1/2"	14	High speed cutting of angle iron,bronze brass, copper, galvanized pipe, thin wall tubing, mild steel and tougher steels at slow speed.	3/32"-1/8"	24
High speed cuting of angle iron,bronze brass, copper, galvanized pipe, thin wall tubing, mild steel and tougher steels at slow speed.	1/8"-1/4" 3/32"-1/8"	18 24	**HIGH SPEED STEEL**		
			High speed cutting of aluminum, angle iron, bronze, brass, copper, galvanized pipe, mild steel and tougher steels including stainless, chrome, tungsten steels plus other problem material at slow speed.	7/32"-7/8" 3/16"-5/8" 5/32"-3/8"	10 14 18

TABLE 4-1 Common Twist Drill Sizes

Drill Designation	Decimal Equivalent	Drill Designation	Decimal Equivalents	Drill Designation	Decimal Equivalents	Drill Designation	Decimal Equivalents	Drill Designation	Decimal Equivalents
No. 80	.0135	No. 49	.0730	4.10mm	.1614	6.80.mm	.2877	27/64	.4219
35mm	.0138	1.90mm	.0748	4.20mm	.1654	6.90mm	.2717	11.00mm	.4331
No. 79	.0145	No. 48	.0760	No. 19	.1660		.2720	7/16	.4375
1/64	.0156	1.95mm	.0768	4.25mm	.1673	7.00mm	.2756	11.50mm	.4528
.40mm	.0158	5/64	.0781	4.30mm	.1693	i	.2770	29/64	.4531
								11.80mm	.4646
No. 78	.0160	No. 47	.0785	No. 18	.1695	7.10mm	.2795	15/32	.4888
.45mm	.0177	2.00mm	.0787	11/64	.1719	K	.2810	12.00mm	.4724
No. 77	.0180	2.05mm	.0807	No. 17	.1730	9/32	.2812	31/64	.4844
.50mm	.0197	No. 46	.0810	4.40mm	.1732	7.20rom	.2835	12.50mm	.4921
No. 76	.0200	No. 45	.0820	No. 16	.1770	7.25nim	.2854	1/2	.5000
								12.80mm	.5039
No. 75	.0210	2.10mm	.0827	4.50mm	.1772	7.30fhm	.2874	13.Omm	.5118
.55mm	.0217	2.15mm	.0846	No. 15	.1800	L	.2900	33/64	.5156
No. 74	.0225	No. 44	.0860	4.60mm	.1811	7.40mm	.2913	17/32	.5312
.60mm	.0236	2.20mm	.0866	No. 14	.1820	m	.2950	13.5mm	.5315
.61 mm	.0240	2.25mm	.0886	No. 13	.1850	7.50mm	.2953	35/64	.5469
No. 73	.0240	No. 43	.0890	4.70mm	.1850	19/64	.2969	14.Omm	.5512
No. 72	.0250	2.30mm	.0906	4.75mm	.1870	7.60mm	2992	9/16	.5625
.65mm	.0256	2.35mm	.0925	3/16	.1875	N	.3020	14.5mm	.5709
No. 71	.0260	No. 42	.0935	4.80mm	.1890	7.70mm	.3031	37/64	.5781
.70mm	.0276	3/32	.0938	No. 12	.1890	7.75mm	.3051	15.Omm	5906
No. 70	.0280	2.40mm	.0945	No. 1 1	.1910	7.80mm	.3071	19/32	.5938
No.69	.0292	No. 41	.0960	4.90mm	.1929	7.90mm	.3110	39/64	.6094
.75mm	.0295	2.45mm	.0965	No. 10	.1935	5/18	.3125	15.5mm	.6102
No. 68	.0310	No. 40	.0980	No. 9	.1960	8.00mm	.3150	5/8	.6250
1/32	.0312	2.50mm	.0984	5.00mm	.1968	0	.3160	16.Omm	.6299
								1625mm	.6388
.80mm	.0315	No. 39	.0995	No. 8	.1990	8.10mm	.3189	41/64	.6406
No. 67	.0320	No. 38	.1015	5.10mm	.2008	8.20mm	.3228	16.5mm	.6496
No. 68	.0330	2.60mm	.1024	No. 7	.2010	p	.3230	21/32	.6562
.85mm	.0335	No. 37	.1040	13/64	.2031	8.25mm	.3248	17.Omm	.6693
No. 65	.0350	2.70mm	.1063	No. 6	.2040	8.30mm	.3268	43/64	.6719
								17.25mm	.6791
.90mm	.0354	No. 36	.1065	5.20mm	.2047	21/64	.3281	11/16	.6875
No. 64	.0360	2.75mm	.1083	No. 5	.2055	8.40mm	.3307	17.5mm	.6890
No. 63	.0370	7/64	.1094	5.25mm	.2067	n	.3320	45/64	.7031
.95mm	.0374	No. 35	.1100	5.30mm	.2087	8.50mm	.3346	ls.Omm	.7087
No. 62	.0380	2.80mm	.1102	No. 4	.2090	8.60mm	.3386	23/32	.7188
No.61	.0390	No. 34	.1110	5.40mm	2126	R	.3390	18.5mm	.7283
1.00mm	.0394	No. 33	.1130	No. 3	.2130	8.70mm	.3425	47/64	.7344
No. W	.0400	2.90mm	.1142	5.50mm	.2165	11/32	.3437	19.Omm	.7480
No. 59	.0410	No. 32	.1160	7/32	.2187	8.75mm	.3445	3/4	.7500
1.05mm	.0413	3.00mm	.1181	5.60mm	.2205	S.Somm	.3465	49/64	.7656
No. 58	0420	No: 31	1200	No. 2	.2210	S	.3480	19.5mm	.7677
No. 57	.0430	3.10mm	.1220	5.70mm	.2244	8.90mm	.3504	25/32	.7812
1.10mm	.0433	1/8	.1250	5.75mm	.2264	9.00mm	.3543	20.Omm	.7874
1.15mm	.0453	3 '20mm	.1260	No. 1	.2280	T	.3580	51/64	.7969
No. 56	.0465	3.25mm	.1280	5.80mm	2283	9.10mm	.3583	20.5mm	.8071
3/64	.0469	No. 30	.1285	5.90mm	.2323	23/64	.3594	13/16	.8125
1.20mm	.0472	3.30mm	.1299	A	.2340	9.20mm	.3622	21.Omm	.8268
1.25mm	.0492	3.40mm	.1339	15/64	.2344	9.25mm	.3642	53/64	.8281
1.30mm	.0512	No. 29	.1360	6.00mm	2362	9.30mm	.3661	27/32	.8438
No. 55	.0520	3.50mm	1378	8	.2380	u	.3680	21.5mm	.8465
1.35mm	0531	No.28	.1405	6.10mm	.2402	9.40mm	.3701	55/64	.8594
No. 54	.0550	9/54	.1406	c	.2420	9.50mm	.3740	22.Omm	.8861
1.40mm	.0551	3.Wmm	.1417	6.20mm	.2"1	3/8	.3750	7/8	.8750
1.45mm	.0571	No. 27	.1440	D	.2460	v	.3770	22.5mm	.8858
1.50mm	0591	3.70mm	1457	6.25mm	.2461	9.60mm	.3780	57/64	.8906
No. 53	.0595	No. 26	.1470	6.30mm	.2480	9.70mm	.3819	23.Omm	.9055
1.55mm	.0610	3.75mm	.1476	1/4	.2500	9.75mm	3839	29/32	.9063
1/16	.0625	No. 25	1495	E	.2500	9.Wmm	.3858	59/64	.9219
1.60mm	.0630	3.80mm	.1496	6.40mm	.2520	w	.3860	23.5mm	.9252
No. 52	.0635	No. 24	.1520	6.50mm	.2559	9.90mm	.3898	15/16	.9375
1.65mm	.0650	3.90mm	.1535	F	.2570	25/64	.3906	24.Omm	.9"0
1.70mm	.0669	No. 23	.1540	6.60mm	.2598	10.Omm	.3937	61/64	.9531
No. 51	.0670	5/32	.1562	G	.2610	x	.3970	24.5mm	.9646
1.75mm	.0689	No. 22	.1570	6.70mm	.2638	y	.4040	31/32	.9688
No. 50	.o7o	4.00mm	.1575	17/64	.2686	13/32	.4062	25.0mm	.9843
1.Somm	.0709	No. 21	.1590	6.75mm	.2657	z	.4130	63/64	.9844
1.85mm	.0728	No. 20	.1610	H	.2860	10.5mm	.4134	1	1.0000

TABLE 4-2 Drill Information

Drill information for different materials (High Speed Drills)

MATERIAL	CUTTING SPEEDS 1. (METERS/MINUTE) MPM	(FEET/MINUTE) FPM	POINT ANGLE	LIP CLEARANCE	COOLANTS
Aluminum And Alloys	61.00 - 91.50	200 - 300	90 - 130 deg	12 - 15 deg	Kerosene/Kerosene & Lard Oil/ Soluble Oil
Armor Plate	12.20 - 18.25	40 - 50	135 - 140 deg	6 - 9 deg	Light Machine Oil
Brass	61.00 - 91.50	200 - 300	118 - 118 deg	12 - 15 deg	Dry/ Soluble Oil/Kerosene/Lard Oil
Bronze	61.00 - 91.50	200 - 300	110 - 118 deg	12 - 15 deg	Dry/ Soluble Oil/Mineral Oil/Lard Oil
Bronze, High Tensile	21.35 - 45.75	70 - 150	100 - 110 deg	12 - 15 deg	Dry/ Soluble Oil/Mineral Oil/Lard Oil
Cast Iron, Soft	30.50 - 45.75	100 - 150	90 - 100 deg	12 - 15 deg	Air Jet Dry/ Soluble Oil
Cast Iron, Medium	21.35 - 30.50	70 - 100	100 - 110 deg	12 - 15 deg	Air Jet Dry/ Soluble Oil
Cast Iron, Hard	21.35 - 3O.50	70 - 100	100 - 118 deg	8 - 12 deg	Air Jet Dry/ Soluble Oil
Cast Iron, Chilled	9.15 - 12.20	30 - 40	118 - 135 deg	5 - 9 deg	Air Jet Dry/ Soluble Oil
Copper	61.00 - 91.50	200 - 300	100 - 118 deg	12 - 15 deg	Air Jet Dry/ Soluble Oil
Copper Graphite Alloy (Carbon Drills)	18.30 - 21.35	60 - 70	**--**	**----**	Soluble Oil/Dry/Mineral Oil/Kerosene
Glass (Carbon Drills)	6.10 - 9.15	20 - 30	**--**	**--**	Soluble Oil/Dry/Mineral Oil/Kerosene
Iron, Malleable	15.25 - 27.45	50 - 90	90 - 100 deg	12 - 15 deg	Light Machine Oil
Magnesium And Alloys	76.25 - 122.0	250 - 400	70 - 118 deg	12 - 15 deg	Soluble Oil
Monel Nickel	4.15 - 15.28	30 - 50	118 - 125 deg	10 - 12 deg	Compressed Air/Mineral Oil
Nickel Alloys	12.20 - 18.30	40 - 60	135 - 140 deg	5 - 7 deg	Lard Oil/Soluble Oil
Plastic, Hot Set	30.50 - 91.50	100 - 300	60 - 90 deg	10 - 12 deg	Lard Oil/Soluble Oil
Plastic, Cold Set	30.50 - 91.50	100 - 300	118 - 135 deg	12 - 20 deg	Soap Solution
Steel, Low Carbon, 0.2-0.3ct	24.40 - 33.55	80 - 110	110 - 118 deg	7 - 9 deg	Soap Solution
Steel, Medium Carbon 0.4-0.5c	21.35 - 24.40	70 - 80	118 - 125 deg	7 - 9 deg	Soluble Oil/Mineral Oil/Sulfur Oil/Lard Oil
Steel (High Carbon 1.2c)	15.25 - 18.30	50 - 60	118 - 145 deg	7 - 9 deg	Soluble Oil/Mineral Oil/Sulfur Oil/Lard Oil
Steel, Forged	15.25 - 18.30	50 - 60	118 - 145 deg	7 - 12 deg	Soluble Oil/Mineral Oil/Sulfur Oil/Lard Oil
Steel, Alloy	15.25 - 21.35	50 - 70	118 - 125 deg	10 - 12 deg	Mineral Lard Oil
Steel, Alloy 300 To 400 Brinnel	6.10 - 9.15	20 - 30	130 - 140 deg	7 - 10 deg	Soluble Oil
Steel, Stainless, Free Machining	9.15 - 24.40	30 - 80	110 - 118 deg	8 - 12 deg	Soluble Oil
Steel, Stainless, Hard	4.57 - 15.25	15 - 50	118 - 135 deg	6 - 8 deg	Soluble Oil
Steel, Manganese	3.66 - 4.57	12 - 15	140 - 150 deg	7 - 10 deg	Soluble Oil
Stone (Carbide Drills)	7.63 - 9.15	25 - 30	**--**	**--**	Water Solution
Wood	91.50 - 122.2	300 - 400	60 - 70 deg	10 - 15 deg	Dry

1. Cutting speeds are for high speed steel drills except as indicated. Carbon drills are approximately 200 to 300% than high speed steel drills.

** Cabide drill point angles and lip clearance angles very with different manufacturers. Consult the manufacturers data on the type of material being drilled for correct point and clearance angles

Table 4-3 Recommended Cutting Fluids For Various Materials

MATERIAL	DRILLING	REAMING	TAPPING	TURNING	THREADING	MILLING
Aluminum	Soluble Oil Kerosene Kerosene & Lard Oil	Soluble Oil Kerosene Mineral Oil	Soluble Oil Mineral Oil	Soluble Oil	Soluble Oil Kerosene & Lard Oil	Soluble Oil Lard Oil Lard Or Mineral Oil
Brass	Dry Soluble Oil Kerosene & Lard Oil	Soluble Oil Dry	Soluble Oil Lard Oil Dry	Soluble Oil	Soluble Oil Lard Oil	Soluble Oil Dry
Bronze	Dry Soluble Oil Lard Oil Mineral Oil	Soluble Oil Lard Oil Dry	Soluble Oil Lard Oil Dry	Soluble Oil	Soluble Oil Lard Oil	Soluble Oil Lard Oil Dry
Cast Iron	Dry Soluble Oil Air Jet	Soluble Oil Mineral Lard Oil	Mineral Lard Oil	Soluble Oil Mineral Lard Oil Dry	Dry Sulfurized Oil	Dry Soluble Oil
Copper	Dry Soluble Or Lard Oil Kerosene Mineral Lard Oil	Soluble Oil Lard Oil Dry	Soluble Oil Mineral Lard Oil	Soluble Oil	Soluble Oil Lard Oil	Soluble Oil Dry
Malleable Iron	Dry Soda Water	Dry Soda Water	Soluble Oil	Soluble Oil	Lard Oil Soda Water	Dry Soda Water
Monel Metal	Soluble Oil Lard Oil	Soluble Oil Lard Oil	Mineral Lard Oil Sulfurized Oil	Soluble Oil	Lard Oil	Soluble Oil
Steel Alloys	Soluble Oil Sulfurized Oil Mineral Lard Oil	Soluble Oil Mineral Lard Oil	Sulfurized Oil Mineral Oil	Soluble Oil	Lard Oil Sulfurized Oil	Soluble Oil Mineral Lard Oil
Steel Forgings Low Carbon	Soluble Oil Sulfurized Lard Oil Lard Oil Mineral Lard Oil	Soluble Oil Mineral Lard Oil	Soluble Oil Lard Oil	Soluble Oil	Soluble Oil Mineral Lard Oil	Soluble Oil Mineral Lard Oil
Tool Steel	Soluble Oil Sulfurized Oil Mineral Lard Oil	Soluble Oil Sulfurized Oil Lard Oil	Mineral Lard Oil Sulfurized Oil	Soluble Oil	Lard Oil Sulfurized Oil	Soluble Oil Lard Oil

TABLE 4-4. Rotational speeds and feeds for high-speed twist drills

Diameter of drill (in.)	MATERIAL AND CUTTING SPEED (FT PER MINUTE)										Feed per revolution (in.)
	Aluminum	Brass & Bronze	Cast iron	Mild steel 0.2-0.3 carbon (LOW)	Steel 0.4-0.5 carbon (MED)	Tool steel 1.2 carbon and drop forgings	Conn. rod molyb-denum steel	3.5 nickel steel	Stainless steel and monel metal	Malleable iron	
	300	200	100	110	80	60	55	60	50	85	
	Revolutions per minute										
1/16	18,336	12,224	6,112	6,724	4,883	3,668	3,404	3,976	3,056	5,192	0.0015
1/8	9,168	6,112	3,056	3,362	2,444	1,834	1,702	1,988	1,528	2,596	0.002-0.003
3/16	6,108	4,072	2,036	2,242	1,630	1,222	1,120	1,324	1,018	1,734	0.004
1/4	4,584	3,056	1,528	1,681	1,222	917	851	994	764	1,298	0.005
5/16	3,666	2,444	1,222	1,344	978	733	672	794	611	1,039	0.005
3/8	3,054	2,036	1,018	1,121	815	611	560	662	509	867	0.006
7/16	2,622	1,748	874	921	699	524	481	568	437	742	0.007
1/2	2,292	1,528	764	840	611	459	420	497	382	649	0.008
9/16	2,037	1,358	679	747	543	407	373	441	340	577	0.008
5/8	1,836	1,224	612	673	489	367	337	398	306	520	0.009
11/16	1,665	1,110	555	611	444	333	300	360	273	472	0.009
3/4	1,524	1,016	508	559	408	306	279	330	254	433	0.010
13/16	1,422	948	474	521	379	285	261	308	237	403	0.010
7/8	1,314	876	438	482	349	262	241	285	219	371	0.011
15/16	1,221	814	407	448	326	244	224	265	204	346	0.012
1	1,146	764	382	420	306	229	210	258	191	325	0.013
1 1/16	1,077	718	359	395	287	215	197	233	180	305	0.013
1 1/8	1,020	680	340	374	272	204	187	221	170	288	0.014
1 3/16	966	644	322	354	258	193	177	209	161	274	0.014
1 1/4	918	612	306	337	245	183	168	199	153	260	0.015
1 5/16	873	582	291	320	233	175	160	189	146	248	0.015
1 3/8	834	556	278	306	222	167	153	180	139	236	0.015
1 7/16	795	530	265	292	212	159	146	172	133	225	0.015
1 1/2	762	508	254	279	204	153	140	165	127	216	0.015
1 9/16	732	488	244	268	195	146	134	159	122	207	0.016
1 5/8	702	468	234	257	188	141	129	152	117	201	0.016
1 11/16	678	452	226	249	181	136	124	147	113	192	0.016
1 3/4	654	436	218	240	175	131	120	142	109	186	0.016
1 13/16	630	420	210	231	168	126	116	137	105	179	0.016
1 7/8	612	408	204	224	163	122	112	133	102	173	0.016
1 15/16	591	394	197	216	158	118	108	128	99	168	0.016
2	573	382	191	210	153	115	105	124	96	162	0.016

1. Rotational speed value for carbide twist drills are 200 to 300 percent higher than H.S.S.

TABLE 4-5. Screw thread pitches and tap drill sizes.

Screw Thread Size and Pitch	Outside Diameter of Screw (in.)	Tap Drill Size	Decimal Equivalent of Drill Size
National Coarse (NC) Series			
No. 1-64	0.073	53	0.0595
No. 2-56	0.086	50	0.0700
No. 3-48	0.099	47	0.0785
No. 4-40	0.112	43	0.0890
No. 5-40	0.125	38	0.1015
No. 6-32	0.138	36	0.1065
No. 8-32	0.164	29	0.1360
No. 10-24	0.190	25	0.1495
No. 12-24	0.216	16	0.1770
No. 1/4-20	0.250	07	0.2010
No. 5/16-18	0.3125	F	0.2570
No. 3/8-16	0.375	5/16	0.3125
No. 7/16-14	0.4375	U	0.3680
No. 1/2-13	0.500	27/64	0.4219
No. 9/16-12	0.5625	31/64	0.4843
No. 5/8-11	0.625	17/32	0.5312
No. 3/4-10	0.750	21/32	0.6562
No. 7/8-9	0.875	49/64	0.7656
No. 1-8	1.000	7/8	0.875
National Finese (NF) Series			
No. 0-80	0.060	3/64	0.0469
No. 1-72	0.073	53	0.0595
No. 2-64	0.086	50	0.0700
No. 3-56	0.099	45	0.0820
No. 4-48	0.112	42	0.0935
No. 5-44	0.125	37	0.1040
No. 6-40	0.138	33	0.1130
No. 8-36	0.164	29	0.1360
No. 10-32	0.190	21	0.1590
No. 12-18	0.216	14	0.1820
No. 1/4-28	0.250	3	0.2130
No. 5/16-24	0.3125	I	0.2720
No. 3/8-24	0.375	Q	0.3320
No. 7/16-20	0.4375	25/64	0.3906
No. 1/2-20	0.500	29/64	0.4531
No. 9/16-18	0.5625	33/64	0.5156
No. 5/8-18	0.625	37/64	0.5781
No. 3/4-16	0.750	11/16	0.6875
No. 7/8-16	0.875	13/16	0.8125
No. 1-14	1.000	15/16	0.9375
METRIC SERIES			
1.6mm x .35	.0630	1.20mm	.0472
2.0mm x .40	.0787	1.60mm	.0630
2.5mm x .45	.0984	2.05mm	.0807
3.0mm x .50	.1181	2.50mm	.0984
3.5mm x .60	.1378	2.90mm	.1142

TABLE 4-5. Screw thread pitches and tap drill sizes (cont.).

METRIC SERIES			
Screw thread size and pitch	Outside diameter of screw (in.)	Tap drill size	Decimal equivalent of drill size
4.0mm x .70	.1575	3.30mm	.1299
5.0mm x .80	.1968	4.20mm	.1654
6.3mm x 1.00	.2480	5.30mm	.2087
8.0mm x 1.25	.3150	6.80mm	.2677
10.0mm x 1.50	.3937	8.50mm	.3346
12.0mm x 1.75	.4724	10.20mm	.4016
14.0mm x 2.00	.5512	12.00mm	.4724
16.0mm x 2.00	.6299	14.00mm	.5512
20.0mm x 2.50	.7874	17.50mm	.6890
24.0mm x 3.00	.9449	21.00mm	.8268
30.0mm x 3.50	1.1811	26.50mm	1.0433
36.0mm x 4.00	1.4173	32.00mm	1.2598
42.0mm x 4.50	1.6535	37.50mm	1.4764
48.0mm x 5.00	1.8898	43.00mm	1.6929
56.0mm x 5.50	2.2047	50.50mm	1.9882
64.0mm x 6.00	2.5197	58.00mm	2.2837
72.0mm x 6.00	2.8346	66.00mm	2.5984
80.0mm x 6.00	3.1456	74.00mm	2.9134
90.0mm x 6.00	3.5433	84.00mm	3.3071
100.0mm x 6.00	3.9370	94.00mm	3.7008

NATIONAL TAPER PIPE THREAD PITCHES AND TAP DRILL SIZES				
Nominal thread size (in.)	Threads per inch	Major pipe diameter (in.)	Tape drill size (in.)	Dercimal equivalent of drill size (in.)
1/8	27	0.405	21/64	0.32813
1/4	18	0.540	29/64	0.45313
3/8	18	0.675	19/32	0.59375
1/2	14	0.840	23/32	0.71875
3/4	14	1.050	15/16	0.9375
1	11 1/2	1.315	1 3/16	1.1875
1 1/4	11 1/2	1.660	1 15/32	1.46875
1 1/2	11 1/2	1.900	1 23/32	1.71875
2	11 1/2	2.375	2 3/16	2.1875
2 1/2	8	2.875	2 11/16	2.6875
3	8	3.500	3 5/16	3.3125
3 1/2	8	4.00	3 13/16	3.8125
4	8	4.500	4 3/16	4.1875

Table___ Formulas for calculating the tap drill size for inch and metric threads.

$$TDS = OD - \frac{1}{N}$$

TDS = Tap Drill size (in Inches)
OD = Outside Diameter
1 = Constant
N = Number of th reads per inch

NOTE: This formula will determine a recommended decimal size, then use the numbered, lettered, or fractional size drill th at is closest to thje computed size.

FOR METRIC SIZES:
The recommended tap drill size is equal to the outside diameter minus the pitch. Metric tap sizes are designated by a capital M, the outside diameter in millimeters, and by the pitch in millimeters; such as M22 x 1.5. To find the recommended tap drill size, subtract 1.5 from 22, to get 20.5, which is the recommended tap drill size. If a metric or inch is not available for the recommended tap drill size, the round up to the nearest available drill.

TABLE 5-1. Grinding wheel selection and application.

GRINDING WHEEL SELECTION AND APPLICATION			
SUITABLE FOR	**WHEEL MATERIAL**	**GRAIN**	**GRADE**
External Cylindrical Grinding			
Good all-around wheels;	Aluminox	2946	L
best adapted to soft steel	Alundum	3836	L
Hardened steel	Aloxite	401	N
Soft steel of small diam.	Aluminox or Alundum	46	K
Reamers, drills and general tool work	Aluminox or Alundum	36	M½
Hard steel, dry grinding	Aluminox or Alundum	80	K
Cast iron and bronze	Aluminox or Alundum	100	I
	Crystolon	45	L
Facing Shoulders			
Ordinary work	Aluminox or Alundum	60	H or I
Fine finish	Aluminox or Alundum	80	I½
Surface Grinding			
	Alundum or Aluminox	46	H
Hardened steel	Alundum or Aluminox	46	G[2]
	Alundum or Aluminox	60	F[2]
Hardened high-speed steel or very thin	Aloxite	367	U
pieces of hardened carbon steel	Alundum or Aluminox	46	G
Cast iron	Carborundum or	36	M
	Crystolon	36	J
Disk Grinding			
Thick pieces, wet grinding	Aluminox or Alundum	30	K
Thin pieces, wet grinding	Aluminox or Alundum	30	J
High-speed steel, dry grinding	Aluminox or Alundum	60 or 80	H or I
Washers and similar pieces	Aluminox or Alundum	60	I
Internal Cylindrical Grinding			
Good all around wheel	Aluminox or Alundum	46	2½ I½
Roughing hardened steel	Aluminox or Alundum	46	J or K
Finishing hardened steel	Aluminox or Alundum	120	J or K
Ordinary finishing without roughing	Aluminox or Alundum	80 & 90	J or K
Roughing brass	Cryatolon	36	H or I
Finishing brass	Crystolon	80	H
Automobile cylinders	Crystolon	46	K
Automobile cylinders	Carborundum	36	M or P
Automobile cylinders, roughing or fair finish	Carbolite	36	H or I
Automobile cylinders, fine finish	Carbolite	60	H
Sharpening Carbon-Steel Cutters, Dry Grinding			
Milling cutters	Aluminox or Alundum	46 or 60	I
Formed and gear cutters	Aluminox or Alundum		

TABLE 7-1. Rake and Relief Angles in Degrees for High-Speed Steel Lathe Tools.

MATERIAL	SIDE RELIEF	FRONT RELIEF	SIDE RAKE	BACK RAKE
ALUMINUM	12	8	15	35
BRASS	10	8	5 to -4	0
BRONZE	10	8	5 to -4	0
CAST IRON	10	8	12	5
COPPER	12	10	20	16
MACHINE STEEL	10 to 12	8	12 to 18	8 to 15
TOOL STEEL	10	8	12	8
STAINLESS STEEL	10	8	15 to 20	8

TABLE 7-2. Cutting speeds for Straight Turning and Threading With HSS Tool Bits.

MATERIAL	STRAIGHT TURNING SPEED		THREADING SPEED	
	FEET PER MINUTE	METERS PER MINUTE	FEET PER MINUTE	METERS PER MINUTE
LOW-CARBON STEEL	80-100	24.4-30.5	35-40	10.7-12.2
MEDIUM-CARBON STEEL	60-80	18.3-24.4	25-30	7.6-9.1
HIGH-CARBON STEEL	35-40	10.7-12.2	15-20	4.6-6.1
STAINLESS STEEL	40-50	12.2-15.2	15-20	4.6-6.1
ALUMINUM AND ITS ALLOYS	200-300	61.0-91.4	50-60	15.2-18.3
ORDINARY BRASS AND BRONZE	100-200	30.5-61.0	40-50	12.2-15.2
HIGH-TENSILE BRONZE	40-60	12.2-18.3	20-25	6.1-7.6
CAST IRON	50-80	15.2-24.4	20-25	6.1-7.6
COPPER	60-80	18.3-24.4	20-25	6.1-7.6

NOTE: Speeds for carbide-tipped bits can be 2 to 3 times the speed recommended for high-speed steel bits.

Simple formulas to use for English and Metric calculations:

ENGLISH	METRIC
$\frac{\text{cs (in feet)} \times 4}{\text{D (in inches)}}$	$\frac{\text{cs (in meters)} \times 320}{\text{D (in millimeters)}}$
RPM = revolutions per minute CS = recommended cutting speed 4 = a constant for this calculation in feet per minute D = diameter of workpiece in inches	RPM = revolutions per minute CS = recmmended cutting speed 320 = a constant for this calculation in meters per mintue D = diameter of workpiece in milimeters

TABLE 7-3. Feeds for various materials (using high-speed steel or carbide-tipped tool bits).

MATERIAL	FINISHING CUTS		ROUGHING CUTS	
	Inches	Millimeters	Inches	Millimeters
LOW-CARBON STEEL	.012	0.3	.025	0.6
MEDIUM-CARBON STEEL	.012	0.3	.015	0.4
HIGH-CARBON STEEL	.005	0.1	.012	0.3
STAINLESS STEEL	.020	0.5	.010	0.2
ALUMINUM (AND ALLOYS)	.003	0.08	.020	0.5
BRASS AND BRONZE	.003	0.08	.020	0.5
HIGH-TENSILE BRONZE	.003	0.08	.020	0.5
CAST IRON	.003	0.08	.020	0.5
COPPER	.003	0.08	.020	0.5

NOTE: Use less feed on thin, long work to avoid bending the work.

TABLE 7-4. Morse Tapers.

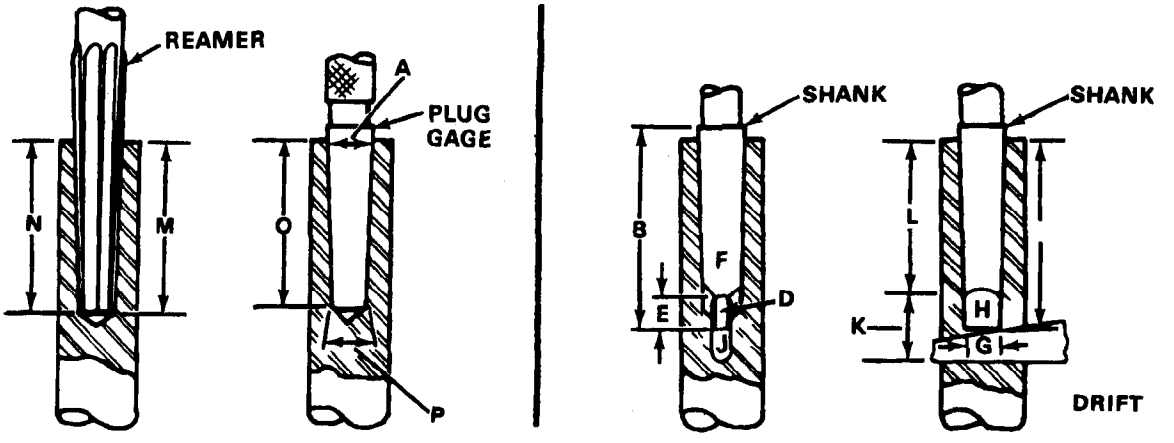

								TANG			TAND SLOT							
Dia of plug at small end P	Dia of gage line A	Whole lengh B	Depth C	Depth of drilled hole M	Depth of reamed hole N	Standard plug depth O	Thickness D	Length E	Radius F	Diameter G	Radius H	Width J	Length K	End of socket to tang slot L	Taper per inch	Taper per foot	No of drift	No of taper
0**	0.252	0.356	2-11/32	2-7/32	2-1/16	2-1/32	2	0.156	1/4	5/32	15/64	3/64	0.166	9/16	1-15/16	0.0520	0.6240	0**
1	0.369	0.475	2-9/16	2-7/16	2-3/16	2-5/32	2-1/8	0.203	3/8	3/16	11/32	3/64	0.213	3/4	2-1/16	0.0498	0.5985	1
2	0.572	0.700	3-1/8	2-15/16	2-21/32	2-39/64	2-9/16	0.250	7/16	1/4	17/32	1/16	0.260	7/8	2-1/2	0.0499	0.5994	2
3	0.778	0.938	3-7/8	3-11/16	3-5/16	3-1/4	3-3/16	0.312	9/16	9/32	23/32	5/64	0.322	1-3/16	3-1/16	0.0501	0.6023	3
4	1.020	1.231	4-7/8	4-5/8	4-3/16	4-1/8	4-1/16	0.469	5/8	5/16	31/32	3/32	0.479	1-1/4	3-7/8	0.0519	0.6232	4
5	1.475	1.748	6-1/8	5-7/8	5/5/16	5-1/4	5-3/16	0.625	3/4	3/8	1-13/32	1/8	0.635	1-1/2	4-15/16	0.0526	0.6315	5
6	2.116	2.494	8-9/16	8-1/4	7-13/32	7-21/64	7-1/4	0.750	1-1/8	1/2	2	5/32	0.760	1-3/4	7	0.0521	0.6256	5**
7	2.750	3.270	11-5/8	11-1/4	10-5/32	10-5/64	10	1.125	1-3/8	3/4	2-5/8	3/16	1.135	2-5/8	9-1/2	0.0520	0.6240	

* THE DIMENSIONS AGREE ESSENTIALLY WITH DIMENSIONS OF THE AMERICAN STANDARD ON MACHINE TAPERS.
** THE SIZE 0 TAPER IS NOT LISTED IN THE AMERICAN STANDARD ON MACHINE TAPERS.
*** THE NO 6 DRIFT WILL ALSO EJECT NO 6 TAPER SHANK TOOLS.

TABLE 7-5. Self-holding tapers basic dimensions.

NO. OF TAPER	TAPER PER FT.	DIA. AT GAGE LINE A	ORIGIN OF SERIES
0.239	0.50200	0.23922	Brown & Sharpe taper series
0.299	0.50200	0.29968	
0.375	0.50200	0.37525	
1	0.59858	0.47500	Morse taper series
2	0.59941	0.70000	
3	0.60235	0.93800	
4	0.62326	1.23100	
4-1/2	0.62400	1.50000	
5	0.63151	1.74800	
6*	0.62565	2.49400	
7*	0.62400	3.27000	
200	0.750	2.000	3/4 in. per ft. taper series
250	0.750	2.500	
300	0.750	3.000	
350	0.750	3.500	
400	0.750	4.000	
450	0.750	4.500	
500	0.750	5.000	
600	0.750	6.000	
800	0.750	8.000	
1000	0.750	10.000	
1200	0.750	12.000	

* These sizes are continued in the tang drive series for the present to meet special needs.

TABLE 7-6. Dimensions for steep machine tapers.

NO. OF TAPER	TAPER PER FT.*	DIA. AT GAGE LINE		LENGTH ALONG AXIS	
5	3.500	1/2	0.500	11/16	0.6875
10	3.500	5/8	0.625	7/8	0.8750
15	3.500	3/4	0.750	1- 1/16	1.0625
20	3.500	7/8	0.875	1- 5/16	1.3125
25	3.500	1	1.000	1- 9/16	1.5625
30	3.500	1-1/4	1.250	1- 7/8	1.8750
35	3.500	1-1/2	1.500	2- 1/4	2.2500
40	3.500	1-3/4	1.750	2-11/16	2.6875
45	3.500	2-1/4	2.250	3- 5/16	3.3125
50	3.500	2-3/4	2.750	4	4.0000
55	3.500	3-1/2	3.500	5- 3/16	5.1875
60	3.500	4-1/4	4.250	6- 3/8	6.3750

Note: The tapers numbered 10,20,30,40,50, and 60 are designated as the "Preferred Series."
The tapers numbered 5,15,25,35, and 45 are designated as the "Intermediate Series."

*This taper corresponds to an included angle of 16° 35' 33.4".

TABLE 7-7. American Standard Taper Pins.

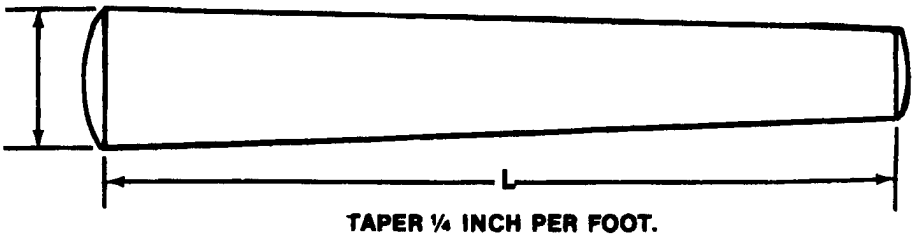

TAPER ¼ INCH PER FOOT.

No. of Taper Pin	Diameter Large End D	Approx. Size D	Range of Lengths L	No. of Taper Pin	Diameter Large End D	Approx. Size D	Range of Lengths L
7/0	0.0625	1/16	3/8 to 5/8	3	0.219	7/32	3/4 to 1-3/4
6/0	0.078	5/64	3/8 to 3/4	4	0.250	1/4	3/4 to 2
5/0	0.094	3/32	1/2 to 1	5	0.289	19/64	1 to 2-1/4
4/0	0.109	7/64	1/2 to 1	6	0.341	11/32	1-1/4 to 3
3/0	0.125	1/8	1/2 to 1	7	0.409	13/32	2 to 3-3/4
2/0	0.141	9/64	1/2 to 1-1/4	8	0.492	1/2	2 to 4-1/2
0	0.156	5/32	1/2 to 1-1/4	9	0.591	19/32	2-3/4 to 5-1/4
1	0.172	11/64	5/8 to 1-1/4	10	0.706	45/64	3-1/2 to 6
2	0.193	3/16	3/4 to 1-1/2				

TABLE 7-8. ISO Metric Pitch & Diameter Combinations.

NOMINAL DIA.		THREAD PITCH	NOMINAL DIA.		THREAD PITCH
MM	INCHES	MM	MM	INCHES	MM
1.6	.0630	0.35	20	.7874	2.5
2	.0787	0.40	24	.9449	3.0
2.5	.0984	0.45	30	1.1811	3.5
3	.1181	0.50	36	1.4173	4.0
3.5	.1378	0.60	42	1.6535	4.5
4	.1575	0.70	48	1.8898	5.0
5	.1969	0.80	56	2.2047	5.5
6.3	.2480	1.00	64	2.5197	6.0
8	.3150	1.25	72	2.8346	6.0
10	.3937	1.50	80	3.1496	6.0
12	.4724	1.75	90	3.5433	6.0
14	.5512	2.00	100	3.9370	6.0
16	.6299	2.00			

TABLE 7-9. General Form Dimensions for Standard Screw Threads.

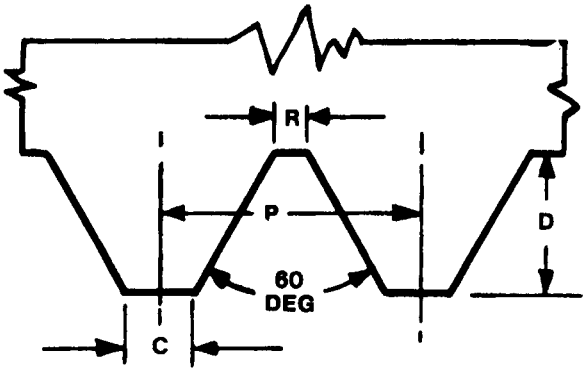

D = DEPTH = 0.54127 X PITCH
C = CREST = PITCH ÷ 4

UNIFIED SCREW THREAD (INTERNAL THREAD)

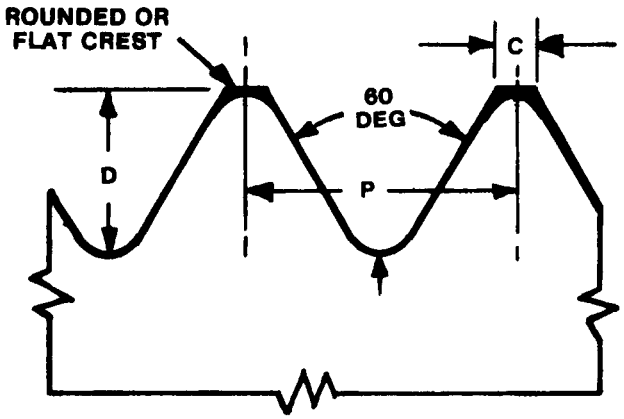

D = DEPTH = 0.61344 X PITCH
C = CREST = PITCH ÷ 8

UNIFIED SCREW THREAD (EXTERNAL THREAD)

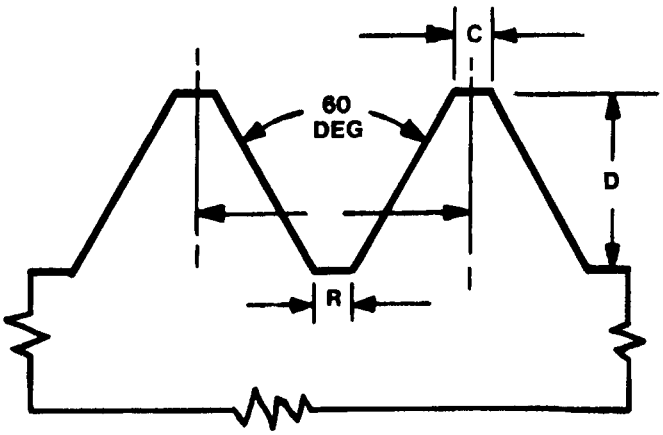

D = DEPTH = 0.64952 × PITCH
C = CREST = PITCH ÷ 8

D = DEPTH = 0.64952 × PITCH
C = CREST = PITCH ÷ 8

AMERICAN NATIONAL STANDARD THREAD

FOR ABOVE THREAD FORMS, P = PITCH = 1 ÷ THREADS PER INCH, AND R = ROOT = PITCH ÷ 8

TABLE 7-9. General Form Dimensions for Standard Screw Threads(cont).

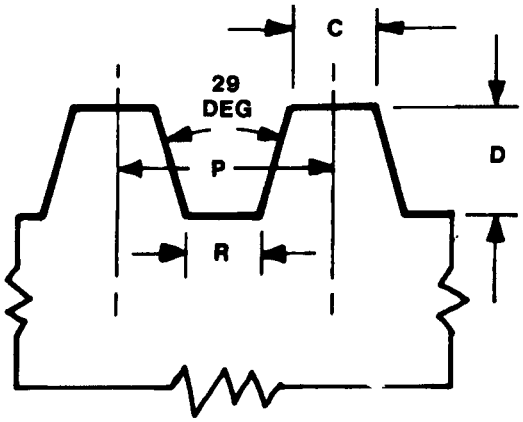

D =DEPTH=1/2 PITCH + 0.01 INCH
C =CREST=0.03707 ×PITCH
R =ROOT=CREST–0.0052 INCH

ACME SCREW THREAD

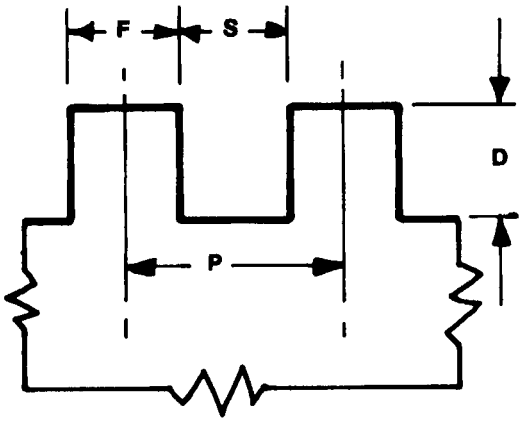

D =DEPTH=1/2 PITCH
F =FLAT=1/2 PITCH
S =SPACE=
FOR SCREW : 1/2 PITCH
FOR NUT : 1/2 PITCH + 0.001 TO 0.002 INCH CLEARANCE

SQUARE SCREW THREAD

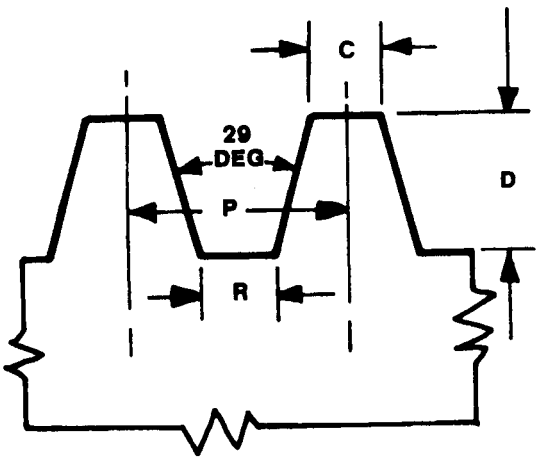

D =DEPTH=0.6866 X PITCH
C =CREST=0.335×PITCH
R =ROOT=0.310×PITCH

29-DEG WORM SCREW THREAD (BROWN AND SHARPE)

FOR ABOVE THREAD FORMS, P=PITCH=1÷THREADS PER INCH

TABLE 7-9. General Form Dimensions for Standard Screw Threads(cont).

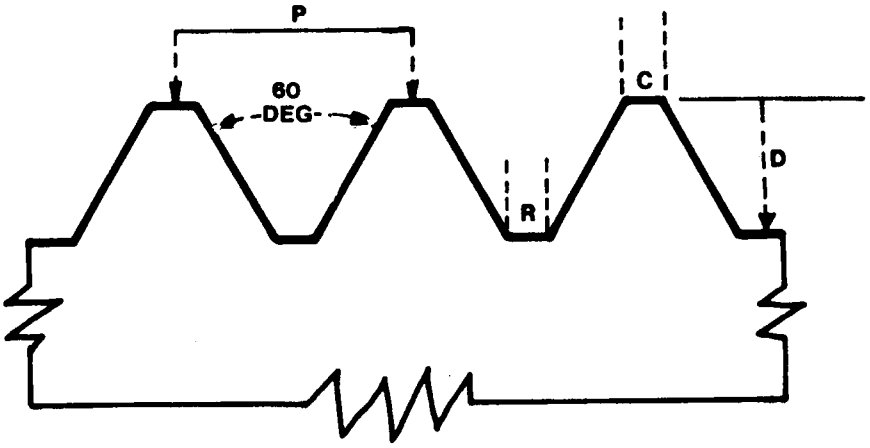

D = DEPTH = 0.7035×P (max)
= 0.6855×P (min)
C = CREST = ROOT = P÷8

INTERNATIONAL METRIC THREAD (SPARK PLUG THREAD)

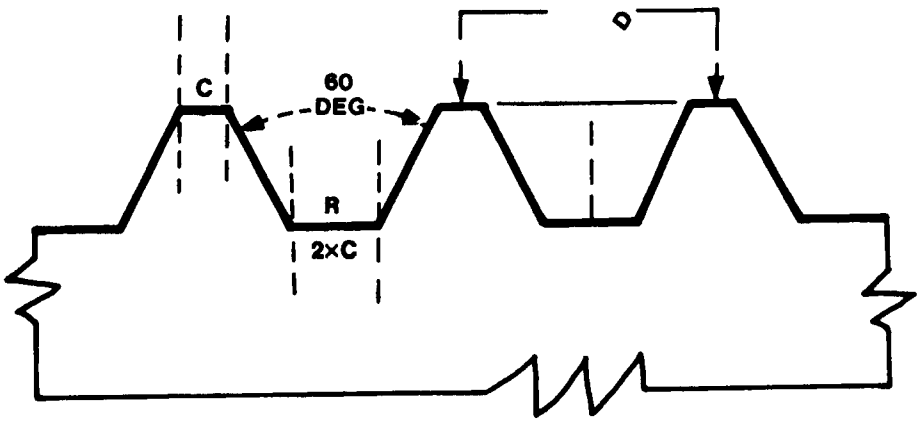

D = DEPTH = 0.54127×P
C = CREST = P÷8
R = ROOT = P÷4

ISO METRIC THREAD STANDARD

TABLE 7-10. Standard Series Limits of Size-Unified and American Screw Threads.

Nominal size and threads per inch	Series designation	External									Internal						
		Class	Allowance	Major diameter limits			Pitch diameter limits			Minor diameter	Class	Minor diameter limits		Pitch diameter limits			Major diameter
				Max	Min	Min	Max	Min	Tolerance			Min	Max	Min	Max	Tolerance	Min
			in.	in.	in.	in.	in.	in.	in.	in.		in.	in.	in.	in.	in.	in.
0—80	NF	2A	0.0005	0.0595	0.0563	.....	0.0514	0.0496	0.0018	0.0442	2B	0.0465	0.0514	0.0519	0.0542	0.0023	0.0600
		3A	.0000	.0600	.0568	.....	.0519	.0506	.0013	.0447	3B	.0465	.0514	.0519	.0536	.0017	.0600
1—64	NC	2A	.0006	.0724	.0686	.....	.0623	.0603	.0020	.0532	2B	.0561	.0623	.0629	.0655	.0026	.0730
		3A	.0000	.0730	.0692	.....	.0629	.0614	.0015	.0538	3B	.0561	.0623	.0629	.0648	.0019	.0730
1—72	NF	2A	.0006	.0724	.0689	.....	.0634	.0615	.0019	.0554	2B	.0580	.0635	.0640	.0665	.0025	.0730
		3A	.0000	.0730	.0695	.....	.0640	.0626	.0014	.0560	3B	.0580	.0635	.0640	.0659	.0019	.0730
2—56	NC	2A	.0006	.0854	.0813	.....	.0738	.0717	.0021	.0635	2B	.0667	.0737	.0744	.0772	.0028	.0860
		3A	.0000	.0860	.0819	.....	.0744	.0728	.0016	.0641	3B	.0667	.0737	.0744	.0765	0021	.0860
2—64	NF	2A	.0006	.0854	.0816	.....	.0753	.0733	.0020	.0662	2B	.0691	.0753	.0759	.0786	.0027	.0860
		3A	.0000	.0860	.0822	.....	.0759	.0744	.0015	.0668	3B	.0691	.0753	.0759	.0779	.0020	.0860
3—48	NC	2A	.0007	.0983	.0938	.....	.0848	.0825	.0023	.0727	2B	.0764	.0845	.0855	.0885	.0030	.0990
		3A	.0000	.0990	.0945	.....	.0855	.0838	.0017	.0734	3B	.0764	.0845	.0855	.0877	.0022	.0990
3—56	NF	2A	.0007	.0983	.0942	.....	.0867	.0845	.0022	.0764	2B	.0797	.0865	.0874	.0902	.0028	.0990
		3A	.0000	.0990	.0949	.....	.0874	.0858	.0016	.0771	3B	.0797	.0865	.0874	.0895	.0021	.0990
4—40	NC	2A	.0008	.1112	.1061	.....	.0950	.0925	.0025	.0805	2B	.0849	.0939	.0958	.0991	.0033	.1120
		3A	.0000	.1120	.1069	.....	.0958	.0939	.0019	.0813	3B	.0849	.0939	.0958	.0982	.0024	.1120
4—48	NF	2A	.0007	.1113	.1068	.....	.0978	.0954	.0024	.0857	2B	.0894	.0968	.0985	.1016	.0031	.1120
		3A	.0000	.1120	.1075	.....	.0985	.0967	.0018	.0864	3B	.0894	.0968	.0985	.1008	.0023	.1120
5—40	NC	2A	.0008	.1242	.1191	.....	.1080	.1054	.0026	.0935	2B	.0979	.1062	.1088	.1121	.0033	.1250
		3A	.0000	.1250	.1199	.....	.1088	.1069	.0019	.0943	3B	.0979	.1062	.1088	.1113	.0025	.1250
5—44	NF	2A	.0007	.1243	.1195	.....	.1095	.1070	.0025	.0964	2B	.1004	.1079	.1102	.1134	.0032	.1250
		3A	.0000	.1250	.1202	.....	.1102	.1083	.0019	.0971	3B	.1004	.1079	.1102	.1126	.0024	.1250
6—32	NC	2A	.0008	.1372	.1312	.....	.1169	.1141	.0028	.0989	2B	.104	.114	.1177	.1214	.0037	.1380
		3A	.0000	.1380	.1320	.....	.1177	.1156	.0021	.0997	3B	.1040	.1140	.1177	.1204	.0027	.1380
6—40	NF	2A	.0008	.1372	.1321	.....	.1210	.1184	.0026	.1065	2B	.111	.119	.1218	.1252	.0034	.1380
		3A	.0000	.1380	.1329	.....	.1218	.1198	.0020	.1073	3B	.1110	.1186	.1218	.1243	.0025	.1380
8—32	NC	2A	.0009	.1631	.1571	.....	.1428	.1399	.0029	.1248	2B	.130	139	.1437	.1475	.0038	.1640
		3A	.0000	.1640	.1580	.....	.1437	.1415	.0022	.1257	3B	.1300	.1389	.1437	.1465	.0028	.1640
8—36	NF	2A	.0008	.1632	.1577	.....	.1452	.1424	.0028	.1291	2B	.134	.142	.1460	.1496	.0036	.1640
		3A	.0000	.1640	.1585	.....	.1460	.1439	.0021	.1299	3B	.1340	.1416	.1460	.1487	.0027	.1640
10—24	NC	2A	.0010	.1890	.1818	.....	.1619	.1586	.0033	.1379	2B	.145	.156	.1629	.1672	.0043	.1900
		3A	.0000	.1900	.1828	.....	.1629	.1604	.0025	.1389	3B	.1450	.1555	.1629	.1661	.0032	.1900
10—32	NF	2A	.0009	.1891	.1831	.....	.1688	.1658	.0030	.1508	2B	.156	.164	.1697	.1736	.0039	.1900
		3A	.0000	.1900	.1840	.....	.1697	.1674	.0023	.1517	3B	.1560	.1641	.1697	.1726	.0029	.1900
12—24	NC	2A	.0010	.2150	.2078	.....	.1879	.1845	.0034	.1639	2B	.171	.181	.1889	.1933	.0044	.2160
		3A	.0000	.2160	.2088	.....	.1889	.1863	.0026	.1649	3B	.1710	.1807	.1889	.1922	.0033	.2160
12—28	NF	2A	.0010	.2150	.2085	.....	.1918	.1886	.0032	.1712	2B	.177	.186	.1928	.1970	.0042	.2160
		3A	.0000	.2160	.2095	.....	.1928	.1904	.0024	.1722	3B	.1770	.1857	.1928	.1959	.0031	.2160
12—32	NEF	2A	.0009	.2151	.2091	.....	.1948	.1917	.0031	.1768	2B	.182	.190	.1957	.1998	.0041	.2160
		3A	.0000	.2160	.2100	.....	.1957	.1933	.0024	.1777	3B	.1820	.1895	.1957	.1988	.0031	.2160

NOTE.—The following seven sizes have been standardized as between American, Canadian, and British military services or industry for purposes of attachment, e.g., an instrument or accessory to a panel: 0—80 NF, 2—56 NC, 4—40 NC, 8—32 NC, 10—24 NC, and 10—32 NF, with 10—32 preferred over 10—24.

TABLE 7-10. Standard Series Limits of Size-Unified and American Screw Threads(cont.).

Nominal size and threads per inch	Series designation	External									Internal						
		Class	Allowance	Major diameter limits			Pitch diameter limits			Minor diameter	Class	Minor diameter limits		Pitch diameter limits			Major diameter
				Max	Min	Min	Max	Min	Tolerance			Min	Max	Min	Max	Tolerance	Min
			in.	in.	in.	in.	in.	in.	in.	in.		in.	in.	in.	in.	in.	in.
1/4—20	UNC	1A	.0011	.2489	.2367	.....	.2164	.2108	.0056	.1876	1B	.196	.207	.2175	.2248	.0073	.2500
		2A	.0011	.2489	.2408	0.2367	.2164	.2127	.0037	.1876	2B	.196	.207	.2175	.2223	.0048	.2500
		3A	.0000	.2500	.2419	.....	.2175	.2147	.0028	.1887	3B	.1960	.2067	.2175	.2211	.0036	.2500
1/4—28	UNF	1A	.0010	.2490	.2392	.....	.2258	.2208	.0050	.2052	1B	.211	.220	.2268	.2333	.0065	.2500
		2A	.0010	.2490	.2425	.....	.2258	.2225	.0033	.2052	2B	.211	.220	.2268	.2311	.0043	.2500
		3A	.0000	.2500	.2435	.....	.2268	.2243	.0025	.2062	3B	.2110	.2190	.2268	.2300	.0032	.2500
1/4—32	NEF	2A	.0010	.2490	.2430	.....	.2287	.2255	.0032	.2107	2B	.216	.224	.2297	.2339	.0042	.2500
		3A	.0000	.2500	.2440	.....	.2297	.2273	.0024	.2117	3B	.2160	.2229	.2297	.2328	.0031	.2500
5/16—18	UNC	1A	.0012	.3113	.2982	.....	.2752	.2691	.0061	.2431	1B	.252	.265	.2764	.2843	.0079	.3125
		2A	.0012	.3113	.3026	.....	.2752	.2712	.0040	.2431	2B	.252	.265	.2764	.2817	.0053	.3125
		3A	.0000	.3125	.3038	.....	.2764	.2734	.0030	.2443	3B	.2520	.2630	.2764	.2803	.0039	.3125
5/16—24	UNF	1A	.0011	.3114	.3006	.....	.2843	.2788	.0055	.2603	1B	.267	.277	.2854	.2925	.0071	.3125
		2A	.0011	.3114	.3042	.....	.2843	.2806	.0037	.2603	2B	267	.277	.2854	.2902	.0048	.3125
		3A	.0000	.3125	.3053	.....	.2854	.2827	.0027	.2614	3B	.2670	.2754	.2854	.2890	.0036	.3125
5/16—32	NEF	2A	.0010	.3115	.3055	.....	.2912	.2880	.0032	.2732	2B	.279	.286	.2922	.2964	.0042	.3125
		3A	.0000	.3125	.3065	.....	.2922	.2898	.0024	.2742	3B	.2790	.2847	.2922	.2953	.0031	.3125
3/8—16	UNC	1A	.0013	.3737	.3595	.....	.3331	.3266	.0065	.2970	1B	.307	.321	.3344	.3429	.0085	.3750
		2A	.0013	.3737	.3643	.3595	.3331	.3287	.0044	.2970	2B	.307	.321	.3344	.3401	.0057	.3750
		3A	.0000	.3750	.3656	.....	.3344	.3311	.0033	.2983	3B	.3070	.3182	.3344	.3387	.0043	.3750
3/8—24	UNF	1A	.0011	.3739	.3631	.....	.3468	.3411	.0057	.3228	1B	.330	.340	.3479	.3553	.0074	.3750
		2A	.0011	.3739	.3667	.....	.3468	.3430	.0038	.3228	2B	.330	.340	.3479	.3528	.0049	.3750
		3A	.0000	.3750	.3678	.....	.3479	.3450	.0029	.3239	3B	.3300	.3372	.3479	.3516	.0037	.3750
3/8—32	NEF	2A	.0010	.3740	.3680	.....	.3537	.3503	.0034	.3357	2B	.341	.349	.3547	.3591	.0044	.3750
		3A	.0000	.3750	.3690	.....	.3547	.3522	.0025	.3367	3B	.3410	.3469	.3547	.3580	.0033	.3750
7/16—14	UNC	1A	.0014	.4361	.4206	.....	.3897	.3826	.0071	.3485	1B	.360	.376	.3911	.4003	.0092	.4375
		2A	.0014	.4361	.4258	.4206	.3897	.3850	.0047	.3485	2B	.360	.376	.3911	.3972	.0061	.4375
		3A	.0000	.4375	.4272	.....	.3911	.3876	.0035	.3499	3B	.3600	.3717	.3911	.3957	.0046	.4375
7/16—20	UNF	1A	.0013	.4362	.4240	.....	.4037	.3975	.0062	.3749	1B	.383	.395	.4050	.4131	.0081	.4375
		2A	.0013	.4362	.4281	.....	.4037	.3995	.0042	.3749	2B	.383	.395	.4050	.4104	.0054	.4375
		3A	.0000	.4375	.4294	.....	.4050	.4019	.0031	.3762	3B	.3830	.3916	.4050	.4091	.0041	.4375
7/16—28	UNEF	2A	.0011	.4364	.4299	.....	.4132	.4096	.0036	.3926	2B	.399	.407	.4143	.4189	.0046	.4375
		3A	.0000	.4375	.4310	.....	.4143	.4116	.0027	.3937	3B	.3990	.4051	.4143	.4178	.0035	.4375
1/2—12	N	2A	.0016	.4984	.4870	.....	.4443	.4389	.0054	.3962	2B	.410	.428	.4459	.4529	.0070	.5000
		3A	.0000	.5000	.4886	.....	.4459	.4419	.0040	.3978	3B	.4100	.4223	.4459	.4511	.0052	.5000
1/2—13	UNC	1A	.0015	.4985	.4822	.....	.4485	.4411	.0074	.4041	1B	.417	.434	.4500	.4597	.0097	.5000
		2A	.0015	.4985	.4876	.4822	.4485	.4435	.0050	.4041	2B	.417	.434	.4500	.4565	.0065	.5000
		3A	.0000	.5000	.4891	.....	.4500	.4463	.0037	.4056	3B	.4170	.4284	.4500	.4548	.0048	.5000

TABLE 7-10. Standard Series Limits of Size-Unified and American Screw Threads(cont.).

Nominal size and threads per inch	Series designation	External									Internal						
		Class	Allowance	Major diameter limits			Pitch diameter limits			Minor diameter	Class	Minor diameter limits		Pitch diameter limits			Major diameter
				Max	Min	Min	Max	Min	Tolerance			Min	Max	Min	Max	Tolerance	Min
			in.	in.	in.	in.	in.	in.	in.	in.		in.	in.	in.	in.	in.	in.
1/2—20	UNF	1A	0.0013	0.4987	0.4865	.....	0.4662	0.4598	0.0064	0.4374	1B	0.416	0.457	0.4675	0.4759	0.0084	0.5000
		2A	.0013	.4987	.4906	.....	.4662	.4619	.0043	.4374	2B	.446	.457	.4675	.4731	.0056	.5000
		3A	.0000	.5000	.4919	.....	.4675	.4643	.0032	.4387	3B	.4460	.4537	.4675	.4717	.0042	.5000
1/2—28	UNEF	2A	.0011	.4989	.4924	.....	.4757	.4720	.0037	.4551	2B	.461	.470	.4768	.4816	.0048	.5000
		3A	.0000	.5000	.4935	.....	.4768	.4740	.0028	.4562	3B	.4610	.4676	.4768	.4804	.0036	.5000
9/16—12	UNC	1A	.0016	.5609	.5437	.....	.5068	.4990	.0078	.4587	1B	.472	.490	.5084	.5186	.0102	.5625
		2A	.0016	.5609	.5495	0.5437	.5068	.5016	.0052	.4587	2B	.472	.490	.5084	.5152	.0068	.5625
		3A	.0000	.5625	.5511	.....	.5084	.5045	.0039	.4603	3B	.4720	.4843	.5084	.5135	.0051	.5625
9/16—18	UNF	1A	.0014	.5611	.5480	.....	.5250	.5182	.0068	.4929	1B	.502	.515	.5264	.5353	.0089	.5625
		2A	.0014	.5611	.5524	.....	.5250	.5205	.0045	.4929	2B	.502	.515	.5264	.5323	.0059	.5625
		3A	.0000	.5625	.5538	.....	.5264	.5230	.0034	.4943	3B	.5020	.5106	.5264	.5308	.0044	.5625
9/16—24	NEF	2A	.0012	.5613	.5541	.....	.5342	.5303	.0039	.5102	2B	.517	.527	.5354	.5405	.0051	.5625
		3A	.0000	.5625	.5563	.....	.5354	.5325	.0029	.5114	3B	.5170	.5244	.5354	.5392	.0038	.5625
5/8—11	UNC	1A	.0016	.6234	.6062	.....	.5644	.5561	.0083	.5119	1B	.527	.546	.5660	.5767	.0107	.6250
		2A	.0016	.6234	.6113	.6052	.5644	.5589	.0055	.5119	2B	.527	.546	.5660	.5732	.0072	.6250
		3A	.0000	.6250	.6129	.....	.5660	.5619	.0041	.5135	3B	.5270	.5391	.5660	.5714	.0054	.6250
5/8—12	N	2A	.0016	.6234	.6120	.....	.5693	.5639	.0054	.5212	2B	.535	.553	.5709	.5780	.0071	.6250
		3A	.0000	.6250	.6136	.....	.5709	.5668	.0041	.5228	3B	.5350	.5463	.5709	.5762	.0053	.6250
5/8—18	UNF	1A	.0014	.6236	.6105	.....	.5875	.5805	.0070	.5554	1B	.565	.578	.5889	.5890	.0091	.6250
		2A	.0014	.6236	.6149	.....	.5875	.5828	.0047	.5554	2B	.565	.578	.5889	.5949	.0060	.6250
		3A	.0000	.6250	.6163	.....	.5889	.5854	.0035	.5568	3B	.5650	.5730	.5889	.5934	.0045	.6250
5/8—24	NEF	2A	.0012	.6238	.6166	.....	.5967	.5927	.0040	.5727	2B	.580	.590	.5979	.6031	.0052	.6250
		3A	.0000	.6250	.6178	.....	.5979	.5949	.0030	.5739	3B	.5800	.5869	.5979	.6018	.0039	.6250
11/16—12	N	2A	.0016	.6859	.6745	.....	.6318	.6264	.0054	.5837	2B	.597	.615	.6334	.6405	.0071	.6875
		3A	.0000	.6875	.6761	.....	.6334	.6293	.0041	.5853	3B	.5970	.6085	.6334	.6387	.0053	.6875
11/16—24	NEF	2A	.0012	.6863	.6791	.....	.6592	.6552	.0040	.6352	2B	.642	.652	.6604	.6656	.0052	.6875
		3A	.0000	.6875	.6803	.....	.6604	.6574	.0030	.6364	3B	.6420	.6494	.6604	.6643	.0039	.6875
3/4—10	UNC	1A	.0018	.7482	.7288	.....	.6832	.6744	.0088	.6255	1B	.642	.663	.6850	.6965	.0115	.7500
		2A	.0018	.7482	.7353	.7288	.6832	.6773	.0059	.6255	2B	.642	.663	.6850	.6927	.0077	.7500
		3A	.0000	.7500	.7371	.....	.6850	.6806	.0044	.6273	3B	.6420	.6545	.6850	.6907	.0057	.7500
3/4—12	N	2A	.0017	.7483	.7369	.....	.6942	.6887	.0055	.6461	2B	.660	.678	.6959	.7031	.0072	.7500
		3A	.0000	.7500	.7386	.....	.6959	.6918	.0041	.6478	3B	.6600	.6707	.6959	.7013	.0054	.7500
3/4—16	UNF	1A	.0015	.7485	.7473	.....	.7079	.7004	.0075	.6718	1B	.682	.696	.7094	.7192	.0098	.7500
		2A	.0015	.7485	.7391	.....	.7079	.7029	.0050	.6718	2B	.682	.696	.7094	.7159	.0065	.7500
		3A	.0000	.7500	.7406	.....	.7094	.7056	.0038	.6733	3B	.6820	.6908	.7094	.7143	.0049	.7500
3/4—20	UNEF	2A	.0013	.7487	.7406	.....	.7162	.7118	.0044	.6874	2B	.696	.707	.7175	.7232	.0057	.7500
		3A	.0000	.7500	.7419	.....	.7175	.7142	.0033	.6887	3B	.6960	.7037	.7175	.7218	.0043	.7500
13/16—12	N	2A	.0017	.8108	.7994	.....	.7567	.7512	.0055	.7086	2B	.722	.740	.7584	.7656	.0072	.8125
		3A	.0000	.8125	.8011	.....	.7584	.7543	.0041	.7103	3B	.7220	.7329	.7584	.7638	.0054	.8125
13/16—16	UN	2A	.0015	.8110	.8016	.....	.7704	.7655	.0049	.7343	2B	.745	.759	.7719	.7782	0063	.8125
		3A	.0000	.8125	.8031	.....	.7719	.7683	.0036	.7358	3B	.7450	.7533	.7719	.7766	0047	8125

TABLE 7-10. Standard Series Limits of Size-Unified and American Screw Threads (cont).

Nominal size and threads per inch	Series designation	External									Internal						
		Class	Allowance	Major diameter limits			Pitch diameter limits			Minor diameter	Class	Minor diameter limits		Pitch diameter limits			Major diameter
				Max	Min	Min	Max	Min	Tolerance			Min	Max	Min	Max	Tolerance	Min
			in.	in.	in.	in.	in.	in.	in.	in.		in.	in.	in.	in.	in.	in.
13/16—20	UNEF	2A	.0013	.8112	.8031	.....	.7787	.7743	.0044	.7498	2B	.758	.770	.7800	.7857	.0057	.8125
		3A	.0000	.8125	.8044	.....	.7800	.7767	.0033	.7512	3B	.7580	.7662	.7800	.7843	.0043	.8125
1/8—9	UNC	1A	.0019	.8731	.8523	.....	.8009	.7914	.0095	.7368	1B	.755	.778	.8028	.8151	.0123	.8750
		2A	.0019	.8731	.8592	.8523	.8009	.7946	.0063	.7368	2B	.755	.778	.8028	.8110	.0082	.8750
		3A	.0000	.8750	.8611	.....	.8028	.7981	.0047	.7387	3B	.7550	.7681	.8028	.8089	.0061	.8750
7/8—12	N	2A	.0017	.8733	.8619	.....	.8192	.8137	.0055	.7711	2B	.785	.803	.8209	.8281	.0072	.8750
		3A	.0000	.8750	.8636	.....	.8209	.8168	.0041	.7728	3B	.7850	.7952	.8209	.8263	.0054	.8750
7/8—14	UNF	1A	.0016	.8734	.8579	.....	.8270	.8189	.0081	.7858	1B	.798	.814	.8286	.8392	.0106	.8750
		2A	.0016	.8734	.8631	.....	.8270	.8216	.0054	.7858	2B	.798	.814	.8286	.8356	.0070	.8750
		3A	.0000	.8750	.8647	.....	.8286	.8645	.0041	.7874	3B	.7980	.8068	.8286	.8339	.0053	.8750
7/8—16	UN	2A	.0015	.8735	.8641	.....	.8329	.8280	.0049	.7968	2B	.807	.821	.8344	.8407	.0063	.8750
		3A	.0000	.8750	.8656	.....	.8344	.8308	.0036	.7983	3B	8070	.8158	.8344	.8391	.0047	.8750
7/8—20	UNEF	2A	.0013	.8737	.8656	.....	.8412	.8368	.0044	.8124	2B	.821	.832	.8425	.8482	.0057	.8750
		3A	.0000	.8750	.8669	.....	.8425	.8392	.0033	.8137	3B	.8210	.8287	.8425	.8468	.0043	.8750
15/16—12	UN	2A	.0017	.9358	.9244	.....	.8817	.8760	.0057	.8336	2B	847	.865	.8834	.8908	.0074	.9375
		3A	.0000	.9375	.9261	.....	.8834	.8793	.0041	.8353	3B	.8470	.8575	.8834	.8889	.0055	.9375
15/16—16	UN	2A	.0015	.9360	.9266	.....	.8954	.8904	.0050	.8593	2B	.870	.884	.8969	.9034	.0065	.9375
		3A	.0000	.9375	.9281	.....	.8969	.8932	.0037	.8608	3B	.8700	.8783	.8969	.9018	.0049	.9375
15/16—20	UNEF	2A	.0014	.9361	.9280	.....	.9036	.8991	.0045	.8748	2B	.883	.895	.9050	.9109	.0059	.9375
		3A	.0000	.9375	.9294	.....	.9050	.9016	.0034	.8762	3B	.8830	.8912	.9050	.9094	.0044	.9375
1—8	UNC	1A	.0020	.9980	.9755	.....	.9168	.9067	.0101	.8446	1B	.865	.890	.9188	.9320	.0132	1.0000
		2A	.0020	.9980	.9830	.9755	.9168	.9100	.0068	.8446	2B	.865	.890	.9188	.9276	.0088	1.0000
		3A	.0000	1.0000	.9850	.....	.9188	.9137	.0051	.8466	3B	.8650	.8797	.9188	.9254	.0066	1.0000
1—12	UNF	1A	.0018	.9982	.9810	.....	.9441	.9353	.0088	.8960	1B	.910	.928	.9459	.9573	.0114	1.0000
		2A	.0018	.9982	.9868	.....	.9441	.9382	.0059	.8960	2B	.910	.928	.9495	.9535	.0076	1.0000
		3A	.0000	1.0000	.9886	.....	.9459	.9415	.0044	.8978	3B	.9100	.9198	.9495	.9516	.0057	1.0000
1—16	UN	2A	.0015	.9985	.9891	.....	.9579	.9529	.0050	.9218	2B	.932	.946	.9594	.9659	.0065	1.0000
		3A	.0000	1.0000	.9906	.....	.9594	.9557	.0037	.9233	3B	.9320	.9408	.9594	.9643	.0049	1.0000
1—20	UNEF	2A	.0014	.9986	.9905	.....	.9661	.9616	.0045	.9373	2B	.946	.957	.9675	.9734	.0059	1.0000
		3A	.0000	1.0000	.9919	.....	.9675	.9641	.0034	.9387	3B	.9460	.9537	.9675	.9719	.0044	1.0000
1-1/16—12	UN	2A	.0017	1.0608	1.0494	.....	1.0067	1.0010	.0057	.9586	2B	.972	.990	1.0084	1.0158	.0074	1.0625
		3A	.0000	1.0625	1.0511	.....	1.0084	1.0042	.0042	.9603	3B	.9720	.9823	1.0084	1.0139	.0055	1.0625
1-1/16—16	UN	2A	.0015	1.0610	1.0516	.....	1.0204	1.0154	.0050	.9843	2B	.995	1.009	1.0219	1.0284	.0065	1.0625
		3A	0000	1.0625	1.0531	.....	1.0219	1.0182	.0037	.9858	3B	.9950	1.0033	1.0219	1.0268	.0049	1.0625
1-1/16—18	NEF	2A	.0014	1.0611	1.0524	.....	1.0250	1.0203	.0047	.9929	2B	1.002	1.015	1.0264	1.0326	.0062	1.0625
		3A	.0000	1.0625	1.0538	.....	1.0264	1.0228	.0036	.9943	3B	1.0020	1.0105	1.0264	1.0310	.0046	1.0625
1-1/8—7	UNC	1A	.0022	1.1228	1.0982	.....	1.0300	1.0191	.0109	.9475	1B	.970	.998	1.0322	1.0463	.0141	1.1250
		2A	.0022	1.1228	1.1064	1.0982	1.0300	1.0228	.0072	.9475	2B	.970	.998	1.0322	1.0416	.0094	1.1250
		3A	.0000	1.1250	1.1086	.....	1.0322	1.0268	.0054	.9497	3B	.9700	.9875	1.0322	1.0393	.0071	1.1250
1-1/8—8	N	2A	.0021	1.1229	1.1079	1.1004	1.0417	1.0348	.0069	.9695	2B	.990	1.015	1.0438	1.0528	.0090	1.1250
		3A	.0000	1.1250	1.1100	.....	1.0438	1.0386	.0052	.9716	3B	.9900	1.0047	1.0438	1.0505	.0067	1.1250
1-1/8—12	UNF	1A	.0018	1.1232	1.1060	.....	1.0691	1.0601	.0090	1.0210	1B	1.035	1.053	1.0709	1.0826	.0117	1.1250
		2A	.0018	1.1232	1.1118	.....	1.0691	1.0631	.0060	1.0210	2B	1.035	1.053	1.0709	1.0787	.0078	1.1250
		3A	.0000	1.1250	1.1136	.....	1.0709	1.0664	.0045	1.0228	3B	1.0350	1.0448	1.0709	1.0768	.0059	1.1250

TABLE 7-10. Standard Series Limits of Size-Unified and American Screw Threads (cont.).

Nominal size and threads per inch	Series designation	External									Internal						
		Class	Allowance	Major diameter limits			Pitch diameter limits			Minor diameter	Class	Minor diameter limits		Pitch diameter limits			Major diameter
				Max	Min	Min	Max	Min	Tolerance			Min	Max	Min	Max	Tolerance	Min
			in.	in.	in.	in.	in.	in.	in.	in.		in.	in.	in.	in.	in.	in.
1-1/8—16	UN	2A	0.0015	1.1235	1.1141	.....	1.0829	1.0779	0.0050	1.0468	2B	1.057	1.071	1.0844	1.0909	1.0065	1.1250
		3A	.0000	1.1250	1.1156	.....	1.0844	1.0807	.0037	1.0483	3B	1.0570	1.0658	1.0844	1.0893	.0049	1.1250
1-1/8—18	NEF	2A	.0014	1.1236	1.1149	.....	1.0875	1.0828	.0047	1.0554	2B	1.065	1.078	1.0889	1.0951	.0062	1.1250
		3A	.0000	1.1250	1.1163	.....	1.0889	1.0853	.0036	1.0568	3B	1.0650	1.0730	1.0889	1.0935	.0046	1.1250
1-3/16—12	UN	2A	.0017	1.1858	1.1744	.....	1.1317	1.1259	.0058	1.0836	2B	1.097	1.115	1.1334	1.1409	.0075	1.1875
		3A	.0000	1.1875	1.1761	.....	1.1334	1.1291	.0043	1.0853	3B	1.0970	1.1073	1.1334	1.1390	.0056	1.1875
1-3/16—16	UN	2A	.0015	1.1860	1.1766	.....	1.1454	1.1403	.0051	1.1093	2B	1.120	1.134	1.1469	1.1535	.0066	1.1875
		3A	.0000	1.1875	1.1781	.....	1.1469	1.1431	.0038	1.1108	3B	1.1200	1.1283	1.1469	1.1519	.0050	1.1875
1-3/16—18	NEF	2A	.0015	1.1860	1.1773	.....	1.1499	1.1450	.0049	1.1178	2B	1.127	1.140	1.1514	1.1577	.0063	1.1875
		3A	.0000	1.1875	1.1788	.....	1.1514	1.1478	.0036	1.1193	3B	1.1270	1.1355	1.1514	1.1561	.0047	1.1875
1-1/4—7	UNC	1A	.0022	1.2478	1.2232	.....	1.1550	1.1439	.0111	1.0725	1B	1.095	1.123	1.1572	1.1716	.0144	1.2500
		2A	.0022	1.2478	1.2314	1.2232	1.1550	1.1476	.0074	1.0725	2B	1.095	1.123	1.1572	1.1668	.0096	1.2500
		3A	.0000	1.2500	1.2336	.....	1.1572	1.1517	.0055	1.0747	3B	1.0950	1.1125	1.1572	1.1644	.0072	1.2500
1-1/4—8	N	2A	.0021	1.2479	1.2329	1.2254	1.1667	1.1597	.0070	1.0945	2B	1.115	1.140	1.1688	1.1780	.0092	1.2500
		3A	.0000	1.2500	1.2350	.....	1.1688	1.1635	.0053	1.0966	3B	1.1150	1.1297	1.1688	1.1757	.0069	1.2500
1-1/4—12	UNF	1A	.0018	1.2482	1.2310	.....	1.1941	1.1849	.0092	1.1460	1B	1.160	1.178	1.1959	1.2079	.0120	1.2500
		2A	.0018	1.2482	1.2368	.....	1.1941	1.1879	.0062	1.1460	2B	1.160	1.178	1.1959	1.2039	.0080	1.2500
		3A	.0000	1.2500	1.2386	.....	1.1959	1.1913	.0046	1.1478	3B	1.1600	1.1698	1.1959	1.2019	.0060	1.2500
1-1/4—16	UN	2A	.0015	1.2485	1.2391	.....	1.2079	1.2028	.0051	1.1718	2B	1.182	1.196	1.2094	1.2160	.0066	1.2500
		3A	.0000	1.2500	1.2406	.....	1.2094	1.2056	.0038	1.1733	3B	1.1820	1.1908	1.2094	1.2144	.0050	1.2500
1-1/4—18	NEF	2A	.0015	1.2485	1.2398	.....	1.2124	1.2075	.0049	1.1803	2B	1.190	1.203	1.2139	1.2202	.0063	1.2500
		3A	.0000	1.2500	1.2413	.....	1.2139	1.2103	.0036	1.1818	3B	1.1900	1.1980	1.2139	1.2186	.0047	1.2500
1-5/16—12	UN	2A	.0017	1.3108	1.2994	.....	1.2567	1.2509	.0058	1.2086	2B	1.222	1.240	1.2584	1.2659	.0075	1.3125
		3A	.0000	1.3125	1.3011	.....	1.2584	1.2541	.0043	1.2103	3B	1.2220	1.2323	1.2584	1.2640	.0056	1.3125
1-5/16—16	UN	2A	.0015	1.3110	1.3016	.....	1.2704	1.2653	.0051	1.2343	2B	1.245	1.259	1.2719	1.2785	.0066	1.3125
		3A	.0000	1.3125	1.3031	.....	1.2719	1.2681	.0038	1.2358	3B	1.2450	1.2533	1.2719	1.2769	.0050	1.3125
1-5/16—18	NEF	2A	.0015	1.3110	1.3023	.....	1.2749	1.2700	.0049	1.2428	2B	1.252	1.265	1.2764	1.2827	.0063	1.3125
		3A	.0000	1.3125	1.3038	.....	1.2764	1.2728	.0036	1.2443	3B	1.2520	1.2605	1.2764	1.2811	.0047	1.3125
1-3/8—6	UNC	1A	.0024	1.3726	1.3453	.....	1.2643	1.2523	.0120	1.1681	1B	1.195	1.225	1.2667	1.2823	.0156	1.3750
		2A	.0024	1.3726	1.3544	1.3453	1.2643	1.2563	.0080	1.1681	2B	1.195	1.225	1.2667	1.2771	.0104	1.3750
		3A	.0000	1.3750	1.3568	.....	1.2667	1.2607	.0060	1.1705	3B	1.1950	1.2146	1.2667	1.2745	.0078	1.3750
1-3/8—8	N	2A	.0022	1.3728	1.3578	1.3503	1.2916	1.2844	.0072	1.2194	2B	1.240	1.265	1.2938	1.3031	.0093	1.3750
		3A	.0000	1.3750	1.3600	.....	1.2938	1.2884	.0054	1.2216	3B	1.2400	1.2547	1.2938	1.3008	.0070	1.3750
1-3/8—12	UNF	1A	.0019	1.3731	1.3559	.....	1.3190	1.3096	.0094	1.2709	1B	1.285	1.303	1.3209	1.3332	.0123	1.3750
		2A	.0019	1.3731	1.3617	.....	1.3190	1.3127	.0063	1.2709	2B	1.285	1.303	1.3209	1.3291	.0082	1.3750
		3A	.0000	1.3750	1.3636	.....	1.3209	1.3162	.0047	1.2728	3B	1.2850	1.2948	1.3209	1.3270	.0061	1.3750
1-3/8—16	UN	2A	.0015	1.3735	1.3641	.....	1.3329	1.3278	.0051	1.2968	2B	1.307	1.321	1.3344	1.3410	.0066	1.3750
		3A	.0000	1.3750	1.3656	.....	1.3344	1.3306	.0038	1.2983	3B	1.3070	1.3158	1.3344	1.3394	.0050	1.3750
1-3/8—18	NEF	2A	.0015	1.3735	1.3648	.....	1.3374	1.3325	.0049	1.3053	2B	1.315	1.328	1.3389	1.3452	.0063	1.3750
		3A	.0000	1.3750	1.3663	.....	1.3389	1.3353	.0036	1.3068	3B	1.3150	1.3230	1.3389	1.3436	.0047	1.3750
1-7/16—12	UN	2A	.0018	1.4357	1.4243	.....	1.3816	1.3757	.0059	1.3335	2B	1.347	1.365	1.3834	1.3910	.0076	1.4375
		3A	.0000	1.4375	1.4261	.....	1.3834	1.3790	.0044	1.3353	3B	1.3470	1.3573	1.3834	1.3891	.0057	1.4375
1-7/16—16	UN	2A	.0016	1.4359	1.4265	.....	1.3953	1.3901	.0052	1.3592	2B	1.370	1.384	1.3969	1.4037	.0068	1.4375
		3A	.0000	1.4375	1.4281	.....	1.3969	1.3930	.0039	1.3608	3B	1.3700	1.3783	1.3969	1.4020	.0051	1.4375

TABLE 7-10. Standard Series Limits of Self-Unified and American Screw Threads (cont.).

Nominal size and threads per inch	Series designation	External									Internal						
		Class	Allowance	Major diameter limits			Pitch diameter limits			Minor diameter	Class	Minor diameter limits		Pitch diameter limits			Major diameter
				Max	Min	Min	Max	Min	Tolerance			Min	Max	Min	Max	Tolerance	Min
			in.	in.	in.	in.	in.	in.	in.	in.		in.	in.	in.	in.	in.	in.
1-7/16—18	NEF	2A	.0015	1.4360	1.4273	.....	1.3999	1.3949	.0050	1.3678	2B	1.377	1.390	1.4014	1.4079	.0065	1.4375
		3A	.0000	1.4375	1.4288	.....	1.4014	1.3977	.0037	1.3693	3B	1.3770	1.3855	1.4014	1.4062	.0048	1.4375
1-1/2—6	UNC	1A	.0024	1.4976	1.4703	.....	1.3893	1.3772	.0121	1.2931	1B	1.320	1.350	1.3917	1.4075	.0158	1.5000
		2A	.0024	1.4976	1.4794	1.4703	1.3893	1.3812	.0081	1.2931	2B	1.320	1.350	1.3917	1.4022	.0105	1.5000
		3A	.0000	1.5000	1.4818	.....	1.3917	1.3856	.0061	1.2955	3B	1.3200	1.3396	1.3917	1.3996	.0079	1.5000
1-1/2—8	N	2A	.0022	1.4978	1.4828	1.4753	1.4166	1.4093	.0073	1.3444	2B	1.365	1.390	1.4188	1.4283	.0095	1.5000
		3A	.0000	1.5000	1.4850	.....	1.4188	1.4133	.0055	1.3466	3B	1.3650	1.3797	1.4188	1.4259	.0071	1.5000
1-1/2—12	UNF	1A	.0019	1.4981	1.4809	.....	1.4440	1.4344	.0096	1.3959	1B	1.410	1.428	1.4459	1.4584	.0125	1.5000
		2A	.0019	1.4981	1.4867	.....	1.4440	1.4376	.0064	1.3959	2B	1.410	1.428	1.4459	1.4542	.0083	1.5000
		3A	.0000	1.5000	1.4886	.....	1.4459	1.4411	.0048	1.3978	3B	1.4100	1.4198	1.4459	1.4522	.0063	1.5000
1-1/2—16	UN	2A	.0016	1.4984	1.4890	.....	1.4578	1.4526	.0052	1.4217	2B	1.432	1.446	1.4594	1.4662	.0068	1.5000
		3A	.0000	1.5000	1.4906	.....	1.4594	1.4555	.0039	1.4233	3B	1.4320	1.4408	1.4594	1.4645	.0051	1.5000
1-1/2—18	NEF	2A	.0015	1.4985	1.4898	.....	1.4624	1.4574	.0050	1.4303	2B	1.440	1.452	1.4639	1.4704	.0065	1.5000
		3A	.0000	1.5000	1.4913	.....	1.4639	1.4602	.0037	1.4318	3B	1.4400	1.4480	1.4639	1.4687	.0048	1.5000
1-9/16—16	N	2A	.0016	1.5609	1.5515	.....	1.5203	1.5151	.0052	1.4842	2B	1.495	1.509	1.5219	1.5287	.0068	1.5625
		3A	.0000	1.5625	1.5531	.....	1.5219	1.5180	.0039	1.4858	3B	1.4950	1.5033	1.5219	1.5270	.0051	1.5625
1-9/16—18	NEF	2A	.0015	1.5610	1.5523	.....	1.5249	1.5199	.0050	1.4928	2B	1.502	1.515	1.5264	1.5329	.0065	1.5625
		3A	.0000	1.5625	1.5538	.....	1.5264	1.5227	.0037	1.4943	3B	1.5020	1.5105	1.5264	1.5312	.0048	1.5625
1-5/8—8	N	2A	.0022	1.6228	1.6078	1.6003	1.5416	1.5342	.0074	1.4694	2B	1.490	1.515	1.5438	1.5535	.0097	1.6250
		3A	.0000	1.6250	1.6100	.....	1.5438	1.5382	.0056	1.4716	3B	1.4900	1.5047	1.5438	1.5510	.0072	1.6250
1-5/8—12	UN	2A	.0018	1.6232	1.6118	.....	1.5691	1.5632	.0059	1.5210	2B	1.535	1.553	1.5709	1.5785	.0076	1.6250
		3A	.0000	1.6250	1.6136	.....	1.5709	1.5665	.0044	1.5228	3B	1.5350	1.5448	1.5709	1.5766	.0057	1.6250
1-5/8—16	UN	2A	.0016	1.6234	1.6140	.....	1.5828	1.5776	.0052	1.5167	2B	1.557	1.571	1.5844	1.5912	.0068	1.6250
		3A	.0000	1.6250	1.6156	.....	1.5844	1.5805	.0039	1.5483	3B	1.5570	1.5658	1.5844	1.5895	.0051	1.6250
1-5/8—18	NEF	2A	.0015	1.6235	1.6148	.....	1.5874	1.5824	.0050	1.5553	2B	1.565	1.578	1.5889	1.5954	.0065	1.6250
		3A	.0000	1.6250	1.6163	.....	1.5889	1.5852	.0037	1.5568	3B	1.5650	1.5730	1.5889	1.5937	.0048	1.6250
1-11/16—16	N	2A	.0016	1.6859	1.6765	.....	1.6453	1.6400	.0053	1.6092	2B	1.620	1.634	1.6469	1.6538	.0069	1.6875
		3A	.0000	1.6875	1.6781	.....	1.6469	1.6429	.0040	1.6108	3B	1.6200	1.6283	1.6469	1.6521	.0052	1.6875
1-11/16—18	NEF	2A	.0015	1.6860	1.6773	.....	1.6499	1.6448	.0051	1.6178	2B	1.627	1.640	1.6514	1.6580	.0066	1.6875
		3A	.0000	1.6875	1.6788	.....	1.6514	1.6476	.0038	1.6193	3B	1.6270	1.6355	1.6514	1.6563	.0049	1.6875
1-3/4—5	UNC	1A	.0027	1.7473	1.7165	.....	1.6174	1.6040	.0134	1.5019	1B	1.534	1.568	1.6201	1.6375	.0174	1.7500
		2A	.0027	1.7473	1.7268	1.7165	1.6174	1.6085	.0089	1.5019	2B	1.534	1.568	1.6201	1.6317	.0116	1.7500
		3A	.0000	1.7500	1.7295	.....	1.6201	1.6134	.0067	1.5046	3B	1.5340	1.5575	1.6201	1.6288	.0087	1.7500
1-3/4—8	N	2A	.0023	1.7477	1.7327	1.7252	1.6665	1.6590	.0075	1.5943	2B	1.615	1.640	1.6688	1.6786	.0098	1.7500
		3A	.0000	1.7500	1.7350	.....	1.6688	1.6632	.0056	1.5966	3B	1.6150	1.6297	1.6688	1.6762	.0074	1.7500
1-3/4—12	UN	2A	.0018	1.7482	1.7368	.....	1.6941	1.6881	.0060	1.6460	2B	1.660	1.678	1.6959	1.7037	.0078	1.7500
		3A	.0000	1.7500	1.7386	.....	1.6959	1.6914	.0045	1.6478	3B	1.6600	1.6698	1.6959	1.7017	.0058	1.7500

TABLE 7-10. Standard Series Limits of Self-Unified and American Screw Threads (cont.).

Nominal size and threads per inch	Series designation	External									Internal						
		Class	Allowance	Major diameter limits			Pitch diameter limits			Minor diameter	Class	Minor diameter limits		Pitch diameter limits			Major diameter
				Max	Min	Min	Max	Min	Tolerance			Min	Max	Min	Max	Tolerance	Min
			in.	in.	in.	in.	in.	in.	in.	in.		in.	in.	in.	in.	in.	in.
1-3/4—16	UNEF	2A	0.0016	1.7484	1.7390	.....	1.7078	1.7025	0.0053	1.6717	2B	1.682	1.696	1.7094	1.7163	0.0069	1.7500
		3A	.0000	1.7500	1.7406	.....	1.7094	1.7054	.0040	1.6733	3B	1.6820	1.6908	1.7094	1.7146	.0052	1.7500
1-13/16—16	N	2A	.0016	1.8109	1.8015	.....	1.7703	1.7650	.0053	1.7342	2B	1.745	1.759	1.7719	1.7788	.0069	1.8125
		3A	.0000	1.8125	1.8031	.....	1.7719	1.7679	.0040	1.7358	3B	1.7450	1.7533	1.7719	1.7771	.0052	1.8125
1-7/8—8	N	2A	.0023	1.8727	1.8577	1.8502	1.7915	1.7838	.0077	1.7193	2B	1.740	1.765	1.7938	1.8038	.0100	1.8750
		3A	.0000	1.8750	1.8600	.....	1.7938	1.7881	.0057	1.7216	3B	1.7400	1.7547	1.7938	1.8013	.0075	1.8750
1-7/8—12	UN	2A	.0018	1.8732	1.8618	.....	1.8191	1.8131	.0060	1.7710	2B	1.785	1.803	1.8209	1.8287	.0078	1.8750
		3A	.0000	1.8750	1.8636	.....	1.8209	1.8164	.0045	1.7728	3B	1.7850	1.7948	1.8209	1.8267	.0058	1.8750
1-7/8—16	UN	2A	.0016	1.8734	1.8640	.....	1.8328	1.8275	.0053	1.7967	2B	1.807	1.821	1.8344	1.8413	.0069	1.8750
		3A	.0000	1.8750	1.8656	.....	1.8344	1.8304	.0040	1.7983	3B	1.8070	1.8158	1.8344	1.8396	.0052	1.8750
1-15/16—16	N	2A	.0016	1.9359	1.9265	.....	1.8953	1.8899	.0054	1.8592	2B	1.870	1.884	1.8969	1.9039	.0070	1.9375
		3A	.0000	1.9375	1.9281	.....	1.8969	1.8929	.0040	1.8608	3B	1.8700	1.8783	1.8969	1.9021	.0052	1.9375
2—4-1/2	UNC	1A	.0029	1.9971	1.9641	.....	1.8528	1.8385	.0143	1.7245	1B	1.759	1.795	1.8557	1.8743	.0186	2.0000
		2A	.0029	1.9971	1.9751	1.9641	1.8528	1.8433	.0095	1.7245	2B	1.759	1.795	1.8557	1.8681	.0124	2.0000
		3A	.0000	2.0000	1.9780	.....	1.8557	1.8486	.0071	1.7274	3B	1.7590	1.7861	1.8557	1.8650	.0093	2.0000
2—8	N	2A	.0023	1.9977	1.9827	1.9752	1.9165	1.9087	.0078	1.8443	2B	1.865	1.890	1.9188	1.9289	.0101	2.0000
		3A	.0000	2.0000	1.9850	.....	1.9188	1.9130	.0058	1.8466	3B	1.8650	1.8797	1.9188	1.9264	.0076	2.0000
2—12	UN	2A	.0018	1.9982	1.9868	.....	1.9441	1.9380	.0061	1.8960	2B	1.910	1.928	1.9459	1.9538	.0079	2.0000
		3A	.0000	2.0000	1.9886	.....	1.9459	1.9414	.0045	1.8978	3B	1.9100	1.9198	1.9459	1.9518	.0059	2.0000
2—16	UNEF	2A	.0016	1.9984	1.9890	.....	1.9578	1.9524	.0054	1.9217	2B	1.932	1.946	1.9594	1.9664	.0070	2.0000
		3A	.0000	2.0000	1.9906	.....	1.9594	1.9554	.0040	1.9233	3B	1.9320	1.9408	1.9594	1.9646	.0052	2.0000
2-1/16—16	N	2A	.0016	2.0609	2.0515	.....	2.0203	2.0149	.0054	1.9842	2B	1.995	2.009	2.0219	2.0289	.0070	2.0625
		3A	.0000	2.0625	2.0531	.....	2.0219	2.0179	.0040	1.9858	3B	1.9950	2.0033	2.0219	2.0271	.0052	2.0625
2-1/8—8	N	2A	.0024	2.1226	2.1076	2.1001	2.0414	2.0335	.0079	1.9692	2B	1.990	2.015	2.0438	2.0540	.0102	2.1250
		3A	.0000	2.1250	2.1100	.....	2.0438	2.0379	.0059	1.9716	3B	1.9900	2.0047	2.0438	2.0515	.0077	2.1250
2-1/8—12	UN	2A	.0018	2.1232	2.1118	.....	2.0691	2.0630	.0061	2.0210	2B	2.035	2.053	2.0709	2.0788	.0079	2.1250
		3A	.0000	2.1250	2.1136	.....	2.0709	2.0664	.0045	2.0228	3B	2.0350	2.0448	2.0709	2.0768	.0059	2.1250
2-1/8—16	UN	2A	.0016	2.1234	2.1140	.....	2.0828	2.0774	.0054	2.0467	2B	2.057	2.071	2.0844	2.0914	.0070	2.1250
		3A	.0000	2.1250	2.1156	.....	2.0844	2.0803	.0041	2.0483	3B	2.0570	2.0658	2.0844	2.0896	.0052	2.1250
2-3/16—16	N	2A	.0016	2.1859	2.1765	.....	2.1453	2.1399	.0054	2.1092	2B	2.120	2.134	2.1469	2.1539	.0070	2.1875
		3A	.0000	2.1875	2.1781	.....	2.1469	2.1428	.0041	2.1108	3B	2.1200	2.1283	2.1469	2.1521	.0052	2.1875
2-1/4—4-1/2	UNC	1A	.0029	2.2471	2.2141	.....	2.1078	2.0882	.0146	1.9745	1B	2.009	2.045	2.1057	2.1247	.0190	2.2500
		2A	.0029	2.2471	2.2251	2.2141	2.1028	2.0931	.0097	1.9745	2B	2.009	2.045	2.1057	2.1183	.0126	2.2500
		3A	.0000	2.2500	2.2280	.....	2.1057	2.0984	.0073	1.9774	3B	2.0090	2.0361	2.1057	2.1152	.0095	2.2500
2-1/4—8	N	2A	.0024	2.2476	2.2326	2.2251	2.1664	2.1584	.0080	2.0942	2B	2.115	2.140	2.1688	2.1792	.0104	2.2500
		3A	.0000	2.2500	2.2350	.....	2.1688	2.1628	.0060	2.0966	3B	2.1150	2.1297	2.1688	2.1766	.0078	2.2500
2-1/4—12	UN	2A	.0018	2.2482	2.2368	.....	2.1941	2.1880	.0061	2.1460	2B	2.160	2.178	2.1959	2.2038	.0079	2.2500
		3A	.0000	2.2500	2.2386	.....	2.1959	2.1914	.0045	2.1478	3B	2.1600	2.1698	2.1959	2.2018	.0059	2.2500
2-1/4—16	UN	2A	.0016	2.2484	2.2390	.....	2.2078	2.2024	.0054	2.1717	2B	2.182	2.196	2.2094	2.2164	.0070	2.2500
		3A	.0000	2.2500	2.2406	.....	2.2094	2.2053	.0041	2.1733	3B	2.1820	2.1908	2.2094	2.2146	.0052	2.2500
2-5/16—16	N	2A	.0017	2.3108	2.3014	.....	2.2702	2.2647	.0055	2.2341	2B	2.245	2.259	2.2719	2.2791	.0072	2.3125
		3A	.0000	2.3125	2.3031	.....	2.2719	2.2678	.0041	2.2358	3B	2.2450	2.2533	2.2719	2.2773	.0054	2.3125

TABLE 7-10. Standard Series Limits of Self-Unified and American Screw Threads (cont.).

Nominal size and threads per inch	Series designation	External									Internal						
		Class	Allowance	Major diameter limits			Pitch diameter limits			Minor diameter	Class	Minor diameter limits		Pitch diameter limits			Major diameter
				Max	Min	Min	Max	Min	Tolerance			Min	Max	Min	Max	Tolerance	Min
			in.	in.	in.	in.	in.	in.	in.	in.		in.	in.	in.	in.	in.	in.
2-3/8—12	UN	2A	.0019	2.3731	2.3617	.....	2.3190	2.3128	.0062	2.2709	2B	2.285	2.303	2.3209	2.3290	.0081	2.3750
		3A	.0000	2.3750	2.3636	.....	2.3209	2.3163	.0046	2.2728	3B	2.2850	2.2948	2.2309	2.3269	.0060	2.3750
2-3/8—16	UN	2A	.0017	2.3733	2.3639	.....	2.3327	2.3272	.0055	2.2966	2B	2.307	2.321	2.3344	2.3416	.0072	2.3750
		3A	.0000	2.3750	2.3656	.....	2.3344	2.3303	.0041	2.2983	3B	2.3070	2.3158	2.3344	2.3398	.0054	2.3750
2-7/16—16	N	2A	.0017	2.4358	2.4264	.....	2.3952	2.3897	.0055	2.3591	2B	2.370	2.384	2.3969	2.4041	.0072	2.4375
		3A	.0000	2.4375	2.4281	.....	2.3969	2.3928	.0041	2.3608	3B	2.3700	2.3783	2.3969	2.4023	.0054	2.4375
2-1/2—4	UNC	1A	.0031	2.4969	2.4612	.....	2.3345	2.3190	.0155	2.1902	1B	2.229	2.267	2.3376	2.3578	.0202	2.5000
		2A	.0031	2.4969	2.4731	2.4612	2.3345	2.3241	.0104	2.1902	2B	2.229	2.267	2.3376	2.3511	.0135	2.5000
		3A	.0000	2.5000	2.4762	.....	2.3376	2.3298	.0078	2.1933	3B	2.2290	2.2594	2.3376	2.3477	.0101	2.5000
2-1/2—8	N	2A	.0024	2.4976	2.4826	2.4751	2.4164	2.4082	.0082	2.3442	2B	2.365	2.390	2.4188	2.4294	.0106	2.5000
		3A	.0000	2.5000	2.4850	.....	2.4188	2.4127	.0061	2.3466	3B	2.3650	2.3797	2.4188	2.4268	.0080	2.5000
2-1/2—12	UN	2A	.0019	2.4981	2.4867	.....	2.4440	2.4378	.0062	2.3959	2B	2.410	2.428	2.4459	2.4540	.0081	2.5000
		3A	.0000	2.5000	2.4886	.....	2.4459	2.4413	.0046	2.3978	3B	2.4100	2.4198	2.4459	2.4519	.0060	2.5000
2-1/2—16	UN	2A	.0017	2.4983	2.4889	.....	2.4577	2.4522	.0055	2.4216	2B	2.432	2.446	2.4594	2.4666	.0072	2.5000
		3A	.0000	2.5000	2.4906	.....	2.4594	2.4553	.0041	2.4233	3B	2.4320	2.4408	2.4594	2.4648	.0054	2.5000
2-5/8—12	UN	2A	.0019	2.6231	2.6117	.....	2.5690	2.5628	.0062	2.5209	2B	2.535	2.553	2.5709	2.5790	.0081	2.6250
		3A	.0000	2.6250	2.6136	.....	2.5709	2.5663	.0046	2.5228	3B	2.5350	2.5448	2.5709	2.5769	.0060	2.6250
2-5/8—16	UN	2A	.0017	2.6233	2.6139	.....	2.5827	2.5772	.0055	2.5466	2B	2.557	2.571	2.5844	2.5916	.0072	2.6250
		3A	.0000	2.6250	2.6156	.....	2.5844	2.5803	.0041	2.5483	3B	2.5570	2.5658	2.5844	2.5898	.0054	2.6250
2-3/4—4	UNC	1A	.0032	2.7468	2.7111	.....	2.5844	2.5686	.0158	2.4401	1B	2.479	2.517	2.5876	2.6082	.0206	2.7500
		2A	.0032	2.7468	2.7230	2.7111	2.5844	2.5739	.0105	2.4401	2B	2.479	2.517	2.5876	2.6013	.0137	2.7500
		3A	.0000	2.7500	2.7262	.....	2.5876	2.5797	.0079	2.4433	3B	2.4790	2.5094	2.5876	2.5979	.0103	2.7500
2-3/4—8	N	2A	.0025	2.7475	2.7325	2.7250	2.6663	2.6580	.0083	2.5941	2B	2.615	2.540	2.6688	2.6796	.0108	2.7500
		3A	.0000	2.7500	2.7350	.....	2.6688	2.6626	.0062	2.5966	3B	2.6150	2.6297	2.6688	2.6769	.0081	2.7500
2-3/4—12	UN	2A	.0019	2.7481	2.7367	.....	2.6940	2.6878	.0062	2.6459	2B	2.660	2.678	2.6959	2.7040	.0081	2.7500
		3A	.0000	2.7500	2.7386	.....	2.6959	2.6913	.0046	2.6478	3B	2.6600	2.6698	2.6959	2.7019	.0060	2.7500
2-3/4—16	UN	2A	.0017	2.7483	2.7389	.....	2.7077	2.7022	.0055	2.6716	2B	2.682	2.696	2.7094	2.7166	.0072	2.7500
		3A	.0000	2.7500	2.7406	.....	2.7094	2.7053	.0041	2.6733	3B	2.6820	2.6908	2.7094	2.7148	.0054	2.7500
2-7/8—12	UN	2A	.0019	2.8731	2.8617	.....	2.8190	2.8127	.0063	2.7709	2B	2.785	2.803	2.8209	2.8291	.0082	2.8750
		3A	.0000	2.8750	2.8636	.....	2.8209	2.8162	.0047	2.7728	3B	2.7850	2.7948	2.8209	2.8271	.0062	2.8750
2-7/8—16	UN	2A	.0017	2.8733	2.8639	.....	2.8327	2.8271	.0056	2.7966	2B	2.807	2.821	2.8344	2.8417	.0073	2.8750
		3A	.0000	2.8750	2.8656		2.8344	2.8302	.0042	2.7983	3B	2.8070	2.8158	2.8344	2.8399	.0055	2.8750
3—4	UNC	1A	.0032	2.9968	2.9611	.....	2.8344	2.8183	.0161	2.6901	1B	2.729	2.767	2.8376	2.8585	.0209	3.0000
		2A	.0032	2.9968	2.9730	2.9611	2.8344	2.8237	.0107	2.6901	2B	2.729	2.767	2.8376	2.8515	.0139	3.0000
		3A	.0000	3.0000	2.9762	.....	2.8376	2.8296	.0080	2.6933	3B	2.7290	2.7594	2.8376	2.8480	.0104	3.0000
3—8	N	2A	.0026	2.9974	2.9824	2.9749	2.9162	2.9077	.0085	2.8440	2B	2.865	2.890	2.9188	2.9299	.0111	3.0000
		3A	.0000	3.0000	2.9850	.....	2.9188	2.9124	.0064	2.8466	3B	2.8650	2.8797	2.9188	2.9271	.0083	3.0000
3—12	UN	2A	.0019	2.9981	2.9867	.....	2.9440	2.9377	.0063	2.8959	2B	2.910	2.928	2.9459	2.9541	.0082	3.0000
		3A	.0000	3.0000	2.9886	.....	2.9459	2.9412	.0047	2.8978	3B	2.9100	2.9198	2.9459	2.9521	.0062	3.0000
3—16	UN	2A	.0017	2.9983	2.9889	.....	2.9577	2.9521	.0056	2.9216	2B	2.932	2.946	2.9594	2.9667	.0073	3.0000
		3A	.0000	3.0000	2.9906	.....	2.9594	2.9552	.0042	2.9233	3B	2.9320	2.9408	2.9594	2.9649	.0055	3.0000

TABLE 7-10. Standard Series Limits of Unified and American Screw Threads (cont.).

Nominal size and threads per inch	Series designation	External									Internal						
		Class	Allowance	Major diameter limits			Pitch diameter limits			Minor diameter	Class	Minor diameter limits		Pitch diameter limits			Major diameter
				Max	Min	Min	Max	Min	Tolerance			Min	Max	Min	Max	Tolerance	Min
			in.	in.	in.	in.	in.	in.	in.	in.		in.	in.	in.	in.	in.	in.
3-1/8—12	UN	2A	0.0019	3.1231	3.1117	.....	3.0690	3.0627	0.0063	3.0209	2B	3.035	3.053	3.0709	3.0791	0.0082	3.1250
		3A	.0000	3.1250	3.1136	.....	3.0709	3.0662	.0047	3.0228	3B	3.0350	3.0448	3.0709	3.0771	.0062	3.1250
3-1/8—16	UN	2A	.0017	3.1233	3.1139	.....	3.0827	3.0771	.0056	3.0466	2B	3.057	3.071	3.0844	3.0917	.0073	3.1250
		3A	.0000	3.1250	3.1156	.....	3.0844	3.0802	.0042	3.0483	3B	3.0570	3.0658	3.0844	3.0899	.0055	3.1250
3-1/4—4	UNC	1A	.0033	3.2467	3.2110	.....	3.0843	3.0680	.0163	2.9400	1B	2.979	3.017	3.0876	3.1088	.0212	3.2500
		2A	.0033	3.2467	3.2229	3.2110	3.0843	3.0734	.0109	2.9400	2B	2.979	3.017	3.0876	3.1017	.0141	3.2500
		3A	.0000	3.2500	3.2262	.....	3.0876	3.0794	.0082	2.9433	3B	2.9790	3.0094	3.0876	3.0982	.0106	3.2500
3-1/4—8	N	2A	.0026	3.2474	3.2324	3.2249	3.1662	3.1575	.0087	3.0940	2B	3.115	3.140	3.1688	3.1801	.0113	3.2500
		3A	.0000	3.2500	3.2350	.....	3.1688	3.1623	.0065	3.0966	3B	3.1150	3.1297	3.1688	3.1772	.0084	3.2500
3-1/4—12	UN	2A	.0019	3.2481	3.2367	.....	3.1940	3.1877	.0063	3.1459	2B	3.160	3.178	3.1959	3.2041	.0082	3.2500
		3A	.0000	3.2500	3.2386	.....	3.1959	3.1912	.0047	3.1478	3B	3.1600	3.1698	3.1959	3.2021	.0062	3.2500
3-1/4—16	UN	2A	.0017	3.2483	3.2389	.....	3.2077	3.2021	.0056	3.1716	2B	3.182	3.196	3.2094	3.2167	.0073	3.2500
		3A	.0000	3.2500	3.2406	.....	3.2094	3.2052	.0042	3.1733	3B	3.1820	3.1908	3.2094	3.2149	.0055	3.2500
3-3/8—12	UN	2A	.0019	3.3731	3.3617	.....	3.3190	3.3126	.0064	3.2709	2B	3.285	3.303	3.3209	3.3293	.0084	3.3750
		3A	.0000	3.3750	3.3636	.....	3.3209	3.3161	.0048	3.2728	3B	3.2850	3.2948	3.3209	3.3272	.0063	3.3750
3-3/8—16	UN	2A	.0017	3.3733	3.3639	.....	3.3327	3.3269	.0058	3.2966	2B	3.307	3.321	3.3344	3.3419	.0075	3.3750
		3A	.0000	3.3750	3.3656	.....	3.3344	3.3301	.0043	3.2983	3B	3.3070	3.3158	3.3344	3.3400	.0056	3.3750
3-1/2—4	UNC	1A	.0033	3.4967	3.4610	.....	3.3343	3.3177	.0166	3.1900	1B	3.229	3.267	3.3376	3.3591	.0215	3.5000
		2A	.0033	3.4967	3.4729	3.4610	3.3343	3.3233	.0110	3.1900	2B	3.229	3.267	3.3376	3.3519	.0143	3.5000
		3A	.0000	3.5000	3.4762	.....	3.3376	3.3293	.0083	3.1933	3B	3.2290	3.2594	3.3376	3.3484	.0108	3.5000
3-1/2—8	N	2A	.0026	3.4974	3.4824	3.4749	3.4162	3.4074	.0088	3.3440	2B	3.365	3.390	3.4188	3.4303	.0115	3.5000
		3A	.0000	3.5000	3.4850	.....	3.4188	3.4122	.0066	3.3466	3B	3.3650	3.3797	3.4188	3.4274	.0086	3.5000
3-1/2—12	UN	2A	.0019	3.4981	3.4867	.....	3.4440	3.4376	.0064	3.3959	2B	3.410	3.428	3.4459	3.4543	.0084	3.5000
		3A	.0000	3.5000	3.4886	.....	3.4459	3.4411	.0048	3.3978	3B	3.4100	3.4198	3.4459	3.4522	.0063	3.5000
3-1/2—16	UN	2A	.0017	3.4983	3.4889	.....	3.4577	3.4519	.0058	3.4216	2B	3.432	3.446	3.4594	3.4669	.0075	3.5000
		3A	.0000	3.5000	3.4906	.....	3.4594	3.4551	.0043	3.4233	3B	3.4320	3.4408	3.4594	3.4650	.0056	3.5000
3-5/8—12	UN	2A	.0019	3.6231	3.6117	.....	3.5690	3.5626	.0064	3.5209	2B	3.535	3.553	3.5709	3.5793	.0084	3.6250
		3A	.0000	3.6250	3.6136	.....	3.5709	3.5661	.0048	3.5228	3B	3.5350	3.5448	3.5709	3.5772	.0063	3.6250
3-5/8—16	UN	2A	.0017	3.6233	3.6139	.....	3.5827	3.5769	.0058	3.5466	2B	3.557	3.571	3.5844	3.5919	.0075	3.6250
		3A	.0000	3.6250	3.6156	.....	3.5844	3.5801	.0043	3.5483	3B	3.5570	3.5658	3.5844	3.5900	.0056	3.6250
3-3/4—4	UNC	1A	.0034	3.7466	3.7109	.....	3.5842	3.5674	.0168	3.4399	1B	3.479	3.517	3.5876	3.6094	.0218	3.7500
		2A	.0034	3.7466	3.7228	3.7109	3.5842	3.5730	.0112	3.4399	2B	3.479	3.517	3.5876	3.6021	.0145	3.7500
		3A	.0000	3.7500	3.7262	.....	3.5876	3.5792	.0084	3.4433	3B	3.4790	3.5094	3.5876	3.5985	.0109	3.7500
3-3/4—8	N	2A	.0027	3.7473	3.7323	3.7248	3.6661	3.6571	.0090	3.5939	2B	3.615	3.640	3.6688	3.6805	.0117	3.7500
		3A	.0000	3.7500	3.7350	.....	3.6688	3.6621	.0067	3.5966	3B	3.6150	3.6297	3.6688	3.6776	.0088	3.7500
3-3/4—12	UN	2A	.0019	3.7481	3.7367	.....	3.6940	3.6876	.0064	3.6459	2B	3.660	3.678	3.6959	3.7043	.0084	3.7500
		3A	.0000	3.7500	3.7386	.....	3.6959	3.6911	.0048	3.6478	3B	3.6600	3.6698	3.6959	3.7022	.0063	3.7500
3-3/4—16	UN	2A	.0017	3.7483	3.7389	.....	3.7077	3.7019	.0058	3.6716	2B	3.682	3.696	3.7094	3.7169	.0075	3.7500
		3A	.0000	3.7500	3.7406	.....	3.7094	3.7051	.0043	3.6733	3B	3.6820	3.6908	3.7094	3.7150	.0056	3.7500
3-7/8—12	UN	2A	.0020	3.8730	3.8616	.....	3.8189	3.8124	.0065	3.7708	2B	3.785	3.803	3.8209	3.8294	.0085	3.8750
		3A	.0000	3.8750	3.8636	.....	3.8209	3.8160	.0049	3.7728	3B	3.7850	3.7948	3.8209	3.8273	.0064	3.8750
3-7/8—16	UN	2A	.0018	3.8732	3.8638	.....	3.8326	3.8267	.0059	3.7965	2B	3.807	3.821	3.8344	3.8420	.0076	3.8750
		3A	.0000	3.8750	3.8656	.....	3.8344	3.8300	.0044	3.7983	3B	3.8070	3.8158	3.8344	3.8401	.0057	3.8750
4—4	UNC	1A	.0034	3.9966	3.9609	.....	3.8342	3.8172	.0170	3.6899	1B	3.729	3.767	3.8376	3.8597	.0221	4.0000
		2A	.0034	3.9966	3.9728	3.9600	3.8342	3.8229	.0113	3.6899	2B	3.729	3.767	3.8376	3.8523	.0147	4.0000
		3A	.0000	4.0000	3.9762	.....	3.8376	3.8291	.0085	3.6933	3B	3.7290	3.7594	3.8376	3.8487	.0111	4.0000

TABLE 7-10. Standard Series Limits of Self-Unified and American Screw Threads (cont.).

Nominal size and threads per inch	Series designation	External									Internal						
		Class	Allowance	Major diameter limits			Pitch diameter limits			Minor diameter	Class	Minor diameter limits		Pitch diameter limits			Major diameter
				Max	Min	Min	Max	Min	Tolerance			Min	Max	Min	Max	Tolerance	Min
			in.	in.	in.	in.	in.	in.	in.	in.		in.	in.	in.	in.	in.	in.
4—8	N	2A	.0027	3.9973	3.9823	3.9748	3.9161	3.9070	.0091	3.8439	2B	3.865	3.890	3.9188	3.9307	.0119	4.0000
		3A	.0000	4.0000	3.9850	.....	3.9188	3.9120	.0068	3.8466	3B	3.8650	3.8797	3.9188	3.9277	.0089	4.0000
4—12	UN	2A	.0020	3.9980	3.9866	.....	3.9439	3.9374	.0065	3.8958	2B	3.910	3.928	3.9459	3.9544	.0085	4.0000
		3A	.0000	4.0000	3.9886	.....	3.9459	3.9410	.0049	3.8978	3B	3.9100	3.9198	3.9459	3.9523	.0064	4.0000
4—16	UN	2A	.0018	3.9982	3.9888	.....	3.9576	3.9517	.0059	3.9215	2B	3.932	3.946	3.9594	3.9670	.0076	4.0000
		3A	.0000	4.0000	3.9906	.....	3.9594	3.9550	.0044	3.9233	3B	3.9320	3.9408	3.9594	3.9651	.0057	4.0000
4-1/4—8	N	2A	.0028	4.2472	4.2322	4.2247	4.1660	4.1567	.0093	4.0938	2B	4.115	4.140	4.1688	4.1809	.0121	4.2500
		3A	.0000	4.2500	4.2350	.....	4.1688	4.1618	.0070	4.0966	3B	4.1150	4.1297	4.1688	4.1778	.0090	4.2500
4-1/4—12	UN	2A	.0020	4.2480	4.2366	.....	4.1939	4.1874	.0065	4.1458	2B	4.160	4.178	4.1959	4.2044	.0085	4.2500
		3A	.0000	4.2500	4.2386	.....	4.1959	4.1910	.0049	4.1478	3B	4.1600	4.1698	4.1959	4.2023	.0064	4.2500
4-1/4—16	UN	2A	.0018	4.2482	4.2388	.....	4.2076	4.2017	.0059	4.1715	2B	4.182	4.196	4.2094	4.2170	.0076	4.2500
		3A	.0000	4.2500	4.2406	.....	4.2094	4.2050	.0044	4.1733	3B	4.1820	4.1908	4.2094	4.2151	.0057	4.2500
4-1/2—8	N	2A	.0028	4.4972	4.4822	4.4747	4.4160	4.4066	.0094	4.3438	2B	4.365	4.390	4.4188	4.4310	.0122	4.5000
		3A	.0000	4.5000	4.4850	.....	4.4188	4.4117	.0071	4.3466	3B	4.3650	4.3797	4.4188	4.4280	.0092	4.5000
4-1/2—12	UN	2A	.0020	4.4980	4.4866	.....	4.4439	4.4374	.0065	4.3958	2B	4.410	4.428	4.4459	4.4544	.0085	4.5000
		3A	.0000	4.5000	4.4886	.....	4.4459	4.4410	.0049	4.3978	3B	4.4100	4.4198	4.4459	4.4523	.0064	4.5000
4-1/2—16	UN	2A	.0018	4.4982	4.4888	.....	4.4576	4.4517	.0059	4.4215	2B	4.432	4.446	4.4594	4.4670	.0076	4.5000
		3A	.0000	4.5000	4.4906	.....	4.4594	4.550	.0044	4.4233	3B	4.4320	4.4408	4.4594	4.4651	.0057	4.5000
4-3/4—8	N	2A	.0029	4.7471	4.7321	4.7246	4.6659	4.6564	.0095	4.5937	2B	4.615	4.640	4.6688	4.6812	.0124	4.7500
		3A	.0000	4.7500	4.7350	.....	4.6688	4.6616	.0072	4.5966	3B	4.6150	4.6297	4.6688	4.6781	.0093	4.7500
4-3/4—12	UN	2A	.0020	4.7480	4.7366	.....	4.6939	4.6872	.0067	4.6458	2B	4.660	4.678	4.6959	4.7046	.0087	4.7500
		3A	.0000	4.7500	4.7386	.....	4.6959	4.6909	.0050	4.6478	3B	4.6600	4.6698	4.6959	4.7025	.0066	4.7500
4-3/4—16	UN	2A	.0018	4.7482	4.7388	.....	4.7076	4.7015	.0061	4.6715	2B	4.682	4.696	4.7094	4.7133	.0079	4.7500
		3A	.0000	4.7500	4.7406	.....	4.7094	4.7049	.0045	4.6733	3B	4.6820	4.6908	4.7094	4.7153	.0059	4.7500
5—8	N	2A	.0029	4.9971	4.9821	4.9746	4.9159	4.9062	.0097	4.8137	2B	4.865	4.890	4.9188	4.9314	.0126	5.0000
		3A	.0000	5.0000	4.9850	.....	4.9188	4.9116	.0072	4.8466	3B	4.8650	4.8797	4.9188	4.9282	.0094	5.0000
5—12	UN	2A	.0020	4.9980	4.9866	.....	4.9439	4.9372	.0067	4.8958	2B	4.910	4.928	4.9459	4.9546	.0087	5.0000
		3A	.0000	5.0000	4.9886	.....	4.9459	4.9409	.0050	4.8978	3B	4.9100	4.9198	4.9459	4.9525	.0066	5.0000
5—16	UN	2A	.0018	4.9982	4.9888	.....	4.9576	4.9515	.0061	4.9215	2B	4.932	4.946	4.9594	4.9673	.0079	5.0000
		3A	.0000	5.0000	4.9906	.....	4.9594	4.9549	.0045	4.9233	3B	4.9320	4.9408	4.9594	4.9653	.0059	5.0000
5-1/4—8	N	2A	.0029	5.2471	5.2321	5.2246	5.1659	5.1561	.0098	5.0937	2B	5.115	5.140	5.1688	5.1815	.0127	5.2500
		3A	.0000	5.2500	5.2350	.....	5.1688	5.1615	.0073	5.0966	3B	5.1150	5.1297	5.1688	5.1783	.0095	5.2500
5-1/4—12	UN	2A	.0020	5.2480	5.2366	.....	5.1939	5.1872	.0067	5.1458	2B	5.160	5.178	5.1959	5.2046	.0087	5.2500
		3A	.0000	5.2500	5.2386	.....	5.1959	5.1909	.0050	5.1478	3B	5.1600	5.1698	5.1959	5.2025	.0066	5.2500

TABLE 7-10. Standard Series Limits of Self-Unified and American Screw Threads (cont.).

Nominal size and threads per inch	Series designation	Class	External									Internal					
			Allowance	Major diameter limits			Pitch diameter limits			Minor diameter	Class	Minor diameter limits		Pitch diameter limits			Major diameter
				Max	Min	Min	Max	Min	Tolerance			Min	Max	Min	Max	Tolerance	Min
			in.	in.	in.	in.	in.	in.	in.	in.		in.	in.	in.	in.	in.	in.
5-1/4—16	UN	2A	0.0018	5.2482	5.2388	.....	5.2076	5.2015	0.0061	5.1715	2B	5.182	5.196	5.2094	5.2173	0.0079	5.2500
		3A	.0000	5.2500	5.2406	.....	5.2094	5.2049	.0045	5.1733	3B	5.1820	5.1908	5.2094	5.2153	.0059	5.2500
5-1/2—8	N	2A	.0030	5.4970	5.4820	5.4745	5.4158	5.4059	.0099	5.3436	2B	5.365	5.390	5.4188	5.4317	.0129	5.5000
		3A	.0000	5.5000	5.4850	.....	5.4188	5.4114	.0074	5.3466	3B	5.3650	5.3797	5.4188	5.4285	.0097	5.5000
5-1/2—12	UN	2A	.0020	5.4980	5.4866	.....	5.4439	5.4372	.0067	5.3958	2B	5.410	5.428	5.4459	5.4546	.0087	5.5000
		3A	.0000	5.5000	5.4886	.....	5.4459	5.4409	.0050	5.3978	3B	5.4100	5.4198	5.4459	5.4525	.0066	5.5000
5-1/2—16	UN	2A	.0018	5.4982	5.4888	.....	5.4576	5.4515	.0061	5.4215	2B	5.432	5.446	5.4594	5.4673	.0079	5.5000
		3A	.0000	5.5000	5.4906	.....	5.4594	5.4549	.0045	5.4233	3B	5.4320	5.4408	5.4594	5.4653	.0059	5.5000
5-3/4—8	N	2A	.0030	5.7470	5.7320	5.7245	5.6658	5.6558	.0100	5.5936	2B	5.615	5.640	5.6688	5.6818	.0130	5.7500
		3A	.0000	5.7500	5.7350	.....	5.6688	5.6613	.0075	5.5966	3B	5.6150	5.6297	5.6688	5.6786	.0098	5.7500
5-3/4—12	UN	2A	.0021	5.7479	5.7365	.....	5.6938	5.6869	.0069	5.6457	2B	5.660	5.678	5.6959	5.7049	.0090	5.7500
		3A	.0000	5.7500	5.7386	.....	5.6959	5.6907	.0052	5.6478	3B	5.6600	5.6698	5.6959	5.7026	.0067	5.7500
5-3/4—16	UN	2A	.0019	5.7481	5.7387	.....	5.7075	5.7013	.0062	5.6714	2B	5.682	5.696	5.7094	5.7175	.0081	5.7500
		3A	.0000	5.7500	5.7406	.....	5.7094	5.7047	.0047	5.6733	3B	5.6820	5.6908	5.7094	5.7155	.0061	5.7500
6—8	N	2A	.0030	5.9970	5.9820	5.9745	5.9158	5.9056	.0102	5.8436	2B	5.865	5.890	5.9188	5.9320	.0132	6.0000
		3A	.0000	6.0000	5.9850	.....	5.9188	5.9112	.0076	5.8466	3B	5.8650	5.8797	5.9188	5.9287	.0099	6.0000
6—12	UN	2A	.0021	5.9979	5.9865	.....	5.9438	5.9369	.0069	5.8957	2B	5.910	5.928	5.9459	5.9549	.0090	6.0000
		3A	.0000	6.0000	5.9886	.....	5.9459	5.9407	.0052	5.8978	3B	5.9100	5.9198	5.9459	5.9526	.0067	6.0000
6—16	UN	2A	.0019	5.9981	5.9887	.....	5.9575	5.9513	.0062	5.9214	2B	5.932	5.946	5.9594	5.9675	.0081	6.0000
		3A	.0000	6.0000	5.9906	.....	5.9594	5.9547	.0047	5.9233	3B	5.9320	5.9408	5.9594	5.9655	.0061	6.0000

TABLE 7-11. *Three Wire Measurement for Metric Threads.*

THREE WIRE THREAD MEASUREMENT
(60° Metric Thread)

M = PD + C PD = M − C

M = Measurement over wires
PD = Pitch diameter
C = Constant

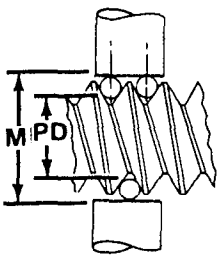

PITCH		BEST WIRE SIZE		CONSTANT	
MM	INCHES	MM	INCHES	MM	INCHES
0.35	.01378	0.2021	.00796	0.3031	.01193
0.4	.01575	0.2309	.00909	0.3464	.01364
0.45	.01772	0.2598	.01023	0.3897	.01534
0.5	.01969	0.2887	.01137	0.4330	.01705
0.6	.02362	0.3464	.01364	0.5196	.02046
0.7	.02756	0.4041	.01591	0.6062	.02387
0.8	.03150	0.4619	.01818	0.6928	.02728
1.0	.03937	0.5774	.02273	0.8660	.03410
1.25	.04921	0.7217	.02841	1.0815	.04262
1.5	.05906	0.8660	.03410	1.2990	.05114
1.75	.06890	1.0104	.03978	1.5155	.05967
2.0	.07874	1.1547	.04546	1.7321	.06819
2.5	.09843	1.4434	.05683	2.1651	.08524
3.0	.11811	1.7321	.06819	2.5981	.10229
3.5	.13780	2.0207	.07956	3.0311	.11933
4.0	.15748	2.3094	.09092	3.4641	.13638
4.5	.17717	2.5981	.10229	3.8971	.15343
5.0	.19685	2.8868	.11365	4.3301	.17048
5.5	.21654	3.1754	.12502	4.7631	.18753
6.0	.23622	3.4641	.13638	5.1962	.20457

TABLE 8-1. Milling Machine Cutting Speeds for High-Speed Steel Milling Cutters.

MATERIAL	CUTTING SPEED (sfpm)[1 2]			
	PLAIN MILLING CUTTERS		END MILLING CUTTERS	
	Roughing	Finishing	Roughing	Finishing
Aluminum	400 to 1,000	400 to 1,000	400 to 1,000	400 to 1,000
Brass, composition	125 to 200	90 to 200	90 to 150	90 to 150
Brass, yellow	150 to 200	100 to 250	100 to 200	100 to 200
Bronze, phosphor and manganese	30 to 80	25 to 100	30 to 80	30 to 80
Cast iron (hard)	25 to 40	10 to 30	25 to 40	20 to 45
Cast iron (soft and medium)	40 to 75	25 to 80	35 to 65	30 to 80
Monel metal	50 to 75	50 to 75	40 to 60	40 to 60
Steel, hard	25 to 50	25 to 70	25 to 50	25 to 70
Steel, soft	60 to 120	45 to 110	50 to 85	45 to 100

1 For carbon steel cutters, decrease values by 50 percent. 2 For carbide-tipped cutters, increase values by 100 percent.

TABLE 8-2. Milling Cutter Rotational Speeds.

	CUTTING SPEED (sfpm)													
dia. of cutter (in.)	25	30	35	40	50	60	70	80	90	100	120	140	160	200
	CUTTER REVOLUTIONS PER MINUTE													
1/4	382	458	535	611	764	917	1,070	1,222	1,376	1,528	1,834	2,139	2,445	3,056
5/16	306	367	428	489	611	733	856	978	1,100	1,222	1,466	1,711	1,955	2,444
3/8	255	306	357	408	509	611	713	815	916	1,018	1,222	1,425	1,629	2,036
7/16	218	262	306	349	437	524	611	699	786	874	1,049	1,224	1,398	1,748
1/2	191	229	268	306	382	459	535	611	688	764	917	1,070	1,222	1,528
5/8	153	184	214	245	306	367	428	489	552	612	736	857	979	1,224
3/4	127	153	178	203	254	306	357	408	458	508	610	711	813	1,016
7/8	109	131	153	175	219	262	306	349	392	438	526	613	701	876
1	95.5	115	134	153	191	229	267	306	344	382	458	535	611	764
1 1/4	76.3	91.8	107	123	153	183	214	245	274	306	367	428	490	612
1 1/2	63.7	76.3	89.2	102	127	153	178	204	230	254	305	356	406	508
1 3/4	54.5	65.5	76.4	87.3	109	131	153	175	196	218	262	305	349	438
2	47.8	57.3	66.9	76.4	95.5	115	134	153	172	191	229	267	306	382
2 1/2	38.2	45.8	53.5	61.2	76.3	91.7	107	122	138	153	184	213	245	306
3	31.8	38.2	44.6	51	63.7	76.4	89.1	102	114	127	152	178	203	254
3 1/2	27.3	32.7	38.2	43.6	54.5	65.5	76.4	87.4	98.1	109	131	153	174	218
4	23.9	28.7	33.4	38.2	47.8	57.3	66.9	76.4	86	95.6	115	134	153	191
5	19.1	22.9	26.7	30.6	38.2	45.9	53.5	61.1	68.8	76.4	91.7	107	122	153
6	15.9	19.1	22.3	25.5	31.8	38.2	44.6	51.0	57.2	63.6	76.3	89	102	127
7	13.6	16.4	19.1	21.8	27.3	32.7	38.2	43.7	49.1	54.6	65.5	76.4	87.4	109
8	11.9	14.3	16.7	19.1	23.9	28.7	33.4	38.2	43	47.8	57.4	66.9	76.5	95.6

TABLE 8-3. Chip Sizes Per Tooth for Various Milling Cutters.

	ALUMINUM		BRONZE		CAST IRON		FREE MACHINING STEEL		ALLOY STEEL	
TYPE OF CUTTER	HSS	CAR BIDE	HSS	CAR BIDE	HSS	CAR BIDE	HSS	CAR BIDE	HSS	CAR BIDE
FACE MILLS	.007 to .022	.007 to .020	.005 to .014	.004 to .012	.004 to .016	.006 to .020	.003 to .012	.004 to .016	.002 to .008	.003 to .014
HELICAL MILLS	.006 to .018	.006 to .016	.003 to .011	.004 to .010	.004 to .018	.002 to .018	.002 to .010	.003 to .013	.002 to .007	.003 to .012
SIDE CUTTING MILLS	.004 to .013	.004 to .012	.003 to .008	.003 to .007	.002 to .009	.003 to .012	.002 to .007	.003 to .009	.001 to .005	.002 to .008
END MILLS	.003 to .011	.003 to .010	.003 to .007	.002 to .006	.002 to .008	.003 to .010	.001 to .006	.002 to .008	.001 to .004	.002 to .007
FORM RELIEVED CUTTERS	.002 to .007	.002 to .006	.001 to .004	.001 to .004	.002 to .005	.002 to .006	.001 to .004	.002 to .005	.001 to .003	.001 to .004
CIRCULAR SAWS	.002 to .005	.002 to .005	.001 to .003	.001 to .003	.001 to .004	.002 to .006	.001 to .003	.001 to .004	.005 to .002	.001 to .004

TABLE 8-4. Sizes of Woodruff Keys.

KEY NUMBER	KEY DIMENSIONS		SHAFT DIAMETER		HEIGHT OF KEY ABOVE SHAFT	DEPTH OF KEYWAY
	DIAMETER	WIDTH	MINIMUM	MAXIMUM		
204	1/2	1/16	5/16	3/8	0.0312	0.1718
304	1/2	3/32	7/16	1/2	0.0469	0.1561
404	1/2	1/8	9/16	3/4	0.0625	0.1405
405	5/8	1/8	9/16	3/4	0.0625	0.1875
505	5/8	5/32	13/16	15/16	0.0781	0.1719
406	3/4	1/8	11/16	3/4	0.0625	0.2505
606	3/4	3/16	1	1 1/8	0.0937	0.2193
507	7/8	5/32	7/8	15/16	0.0781	0.2969
807	7/8	1/4	15/16	1 1/8	0.1250	0.2500
608	1	3/16	1	1 7/16	0.0937	0.3443
1008	1	5/16	1 1/16	1 5/8	0.1562	0.2818
609	1 1/8	3/16	1 1/16	1 7/16	0.0937	0.3903
810	1 1/4	1/4	1 1/4	1 3/4	0.1250	0.4220
1210	1 1/4	3/8	1 1/2	1 7/8	0.1875	0.3595
1011	1 3/8	5/10	1 13/16	2	0.1562	0.4378

TABLE 8-5. Dimensions of Square-Ends Machine Keys.

SHAFT DIAMETER (in.)	SQUARE SECTION KEYS		FLAT SECTION KEYS		
	Width and thickness (in.)	Bottom of keyway to opposite side of shaft (in.)	Width (in.)	Thickness (in.)	Bottom of keyway to opposite side of shaft (in.)
1/2	1/8	0.430	1/8	3/32	0.455
9/16	1/8	0.493	1/8	3/32	0.509
5/8	3/16	0.517	3/16	1/8	0.548
11/16	3/16	0.581	3/16	1/8	0.612
3/4	3/16	0.644	3/16	1/8	0.676
13/16	3/16	0.708	3/16	1/8	0.739
7/8	3/16	0.771	3/16	1/8	0.802
15/16	1/4	0.796	1/4	3/16	0.827
1	1/4	0.859	1/4	3/16	0.890
1 1/16	1/4	0.923	1/4	3/16	0.954
1 1/8	1/4	0.986	1/4	3/16	1.017
1 3/16	1/4	1.049	1/4	3/16	1.081
1 1/4	1/4	1.112	1/4	3/16	1.144
1 5/16	5/16	1.137	5/16	1/4	1.169
1 3/8	5/16	1.201	5/16	1/4	1.232
1 7/16	3/8	1.225	3/8	1/4	1.288
1 1/2	3/8	1.289	3/8	1/4	1.351
1 9/16	3/8	1.352	3/8	1/4	1.415
1 5/8	3/8	1.416	3/8	1/4	1.478
1 11/16	3/8	1.479	3/8	1/4	1.542
1 3/4	3/8	1.542	3/8	1/4	1.605
1 13/16	1/2	1.527	1/2	3/8	1.590
1 7/8	1/2	1.591	1/2	3/8	1.654
1 15/16	1/2	1.655	1/2	3/8	1.717
2	1/2	1.718	1/2	3/8	1.781

TABLE 8-6. Dimensions of T-Slots.

T-BOLT SIZE (DIAMETER IN in.)	THROAT WIDTH (in.)	THROAT DEPTH (in.)		HEAD SPACE (in.)	
		MAX.	MIN.	WIDTH	DEPTH
1/4	9/32	3/8	1/8	9/16	15/64
5/16	11/32	7/16	5/32	21/32	17/64
3/8	7/16	9/16	7/32	25/32	31/64
1/2	9/16	11/16	5/16	31/32	35/64
3/8	11/16	7/8	7/16	1 1/4	31/64
3/4	1/16	1 1/16	9/16	1 15/32	1 3/32

TABLE 8-7. Series of Involute Milling Cutters for each Pitch.

NUMBER OF CUTTER	WILL CUT GEAR FROM:	NUMBER OF CUTTER	WILL CUT GEAR FROM:
1	135 teeth to a rack	5	21 to 25 teeth
2	55 to 134 teeth	6	17 to 20 teeth
3	35 to 54 teeth	7	14 to 16 teeth
4	26 to 34 teeth	8	12 to 13 teeth

NOTE: THE REGULAR CUTTERS LISTED ABOVE ARE USED ORDINARILY. THE CUTTERS LISTED BELOW (AN INTERMEDIATE SERIES HAVING HALF-NUMBERS) MAY BE USED WHEN GREATER ACCURACY OF TOOTH SPACE IS ESSENTIAL IN CASES WHERE THE NUMBER OF TEETH ARE BETWEEN THE NUMBER FOR WHICH THE REGULAR CUTTERS ARE INTENDED.

NUMBER OF CUTTER	WILL CUT GEAR FROM:	NUMBER OF CUTTER	WILL CUT GEAR FROM:
1-1/2	80 to 134 teeth	5-1/2	19 to 20 teeth
2-1/2	42 to 54 teeth	6-1/2	15 to 16 teeth
3-1/2	30 to 34 teeth	7-1/2	13 teeth
4-1/2	23 to 25 teeth		

TABLE 8-8. Standard Spline Dimensions.

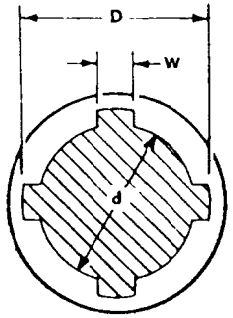

4-SPLINE

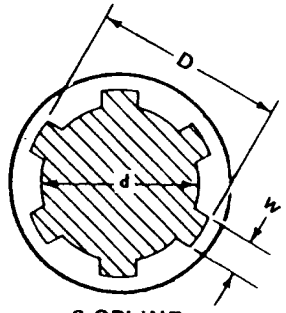

6-SPLINE

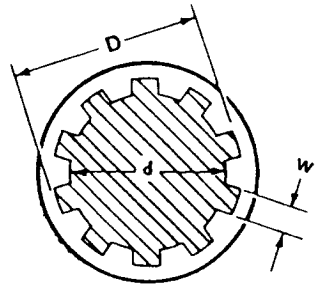

10-SPLINE

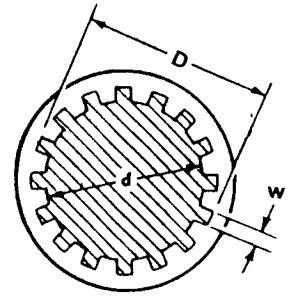

16-SPLINE

spline shaft	Width of spline (all fits)*				Permanent fit ** Minor diameter				Sliding fit when not under load** Minor diameter				Sliding fit when under load** Minor diameter		
	4-Spline (0.241 D)	6-Spline (0.250 D)	10-Spline (0.156 D)	16-Spline (0.098 D)	4-Spline (0.850 D)	6-Spline (0.900 D)	10-Spline (0.910 D)	16-Spline (0.910 D)	4-Spline (0.750 D)	6-Spline (0.850 D)	10-Spline (0.860 D)	16-Spline (0.860 D)	6-Spline (0.800 D)	10-Spline (0.810 D)	16-Spline (0.810 D)
¾ (.750)	0.181	0.188	0.117	.....	0.637	0.675	0.683	.....	0.562	0.638	0.645	.....	0.600	0.608	.....
⅞ (.875)	0.211	0.219	0.137	.....	0.744	0.788	0.796	.....	0.656	0.744	0.753	.....	0.700	0.709	.....
1 (1.000)	0.241	0.250	0.156	.....	0.850	0.900	0.910	.....	0.750	0.850	0.860	.....	0.800	0.810	.....
1⅛ (1.125)	0.271	0.281	0.176	.....	0.956	1.013	1.024	.....	0.844	0.956	0.968	.....	0.900	0.911	.....
1¼ (1.250)	0.301	0.313	0.195	.....	1.062	1.125	1.138	.....	0.937	1.063	1.075	.....	1.000	1.013	.....
1⅜ (1.375)	0.331	0.344	0.215	.....	1.169	1.238	1.251	.....	1.031	1.169	1.183	.....	1.100	1.114	.....
1½ (1.500)	0.361	0.375	0.234	.....	1.275	1.350	1.365	.....	1.125	1.275	1.290	.....	1.200	1.215	.....
1⅝ (1.625)	0.391	0.406	0.254	.....	1.381	1.463	1.479	.....	1.219	1.381	1.398	.....	1.300	1.316	.....
1¾ (1.750)	0.422	0.438	0.273	.....	1.487	1.575	1.593	.....	1.312	1.488	1.505	.....	1.400	1.418	.....
2 (2.000)	0.482	0.500	0.312	0.196	1.700	1.800	1.820	1.820	1.500	1.700	1.720	1.720	1.600	1.620	1.020
2¼ (2.250)	0.542	0.563	0.351	.....	1.912	2.025	2.043	.....	1.687	1.913	1.935	.....	1.800	1.823	.....
2½ (2.500)	0.602	0.625	0.390	0.245	2.125	2.250	2.275	2.275	1.875	2.125	2.150	2.150	2.000	2.025	2.025
3 (3.000)	0.723	0.750	0.468	0.294	2.550	2.700	2.730	2.730	2.250	2.550	2.580	2.580	2.400	2.430	2.430
3½ (3.500)	.....	.....	0.546	0.343	.....	.....	3.185	3.185	.....	.....	3.010	3.010	.....	2.835	2.835
4 (4.000)	.....	.....	0.624	0.392	.....	.....	3.640	3.640	.....	.....	3.440	3.440	.....	3.240	3.240
4½ (4.500)	.....	.....	0.702	0.441	.....	.....	4.095	4.095	.....	.....	3.870	3.870	.....	3.645	3.645
5 (5.000)	.....	.....	0.780	0.490	.....	.....	4.550	4.550	.....	.....	4.300	4.300	.....	4.050	4.050
5½ (5.500)	.....	.....	0.858	0.539	.....	.....	5.005	5.005	.....	.....	4.730	4.730	.....	4.455	4.455
6 (6.000)	.....	.....	0.936	0.588	.....	.....	5.460	5.460	.....	.....	5.160	5.160	.....	4.860	4.860

*Tolerance allowed is - 0.002 inch for shafts ¾ to 1¾ inches in diameter inclusive, and - 0.003 inch for larger sizes.

*Tolerance allowed is - 0.001 inch for shafts ¾ to 1¾ inches in diameter inclusive, - 0.002 inch for shafts 2 to 3 inches in diameter inclusive, and - 0.003 inch for larger sizes.

TABLE 9-1. Versa-Mil Cutting Speeds.

1. To determine the cutting speed of the material:
   a. Locate the column for the operation to be performed.
   b. Determine the type of cutter being used.
   c. Follow down the column to the type of material being used.
   d. Select the desired cutting speed from the chart.
   (lower speeds are for roughing while higher speeds are for finishing)

2. After the cutting speed has been selected from the chart, select the pulley ratio from the ratio chart.
   a. Locate the column the speed selected (determined from cutting speed chart) is located in.
   b. Follow the column down to the diameter closest to the cutter being used.
   c. Select the pulley ratio to ber used.
   d. Ratio selected will determine the head to use.

MATERIAL	END MILLING		MILLING SHELL/SIDE/FORM			DRILLING	FLY CUTTING	
	HSS	CARBIDE	HSS	CARBIDE	HSS	CARBIDE	HSS	CARBIDE
ALUMINUM	400-1000	600 & UP	400-1000	600 & UP	200-300	300-400	200-300	400-600
BRASS	100-200	150-300	150-200	200-500	200-300	300-450	150-200	300-400
BRONZE	30-80	45-120	25-100	50-200	200-300	300-400	30-100	60-200
CAST IRON	30-80	45-120	25-80	500-160	100-150	150-225	50-80	100-160
COPPER	60-80	90-120	125-175	250-350	60-70	90-105	60-80	120-160
MACHINERY STEEL	60-80	90-120	25-150	50-100	80-100	120-150	60-80	120-160
STEEL (HARD)	25-70	40-105	25-70	50-140	20-30	30-45	35-40	70-80
STEEL (SOFT)	45-100	70-150	45-110	90-220	50-60	75-90	80-100	160-200
STEEL STAINLESS	20-40	30-60	35-105	70-210	30-40	45-60	40-50	80-100
TOOL STEEL	40-60	60-90	70-105	140-210	50-60	75-90	35-40	70-80

TABLE 9-2. Versa-Mil Pulley Combinations.

DIAM. OF CUTTER	20-40 PULLEY RATIO	40-60 PULLEY RATIO	60-100 PULLEY RATIO	100-140 PULLEY RATIO	140-180 PULLEY RATIO	180-230 PULLEY RATIO	230-280 PULLEY RATIO	280-330 PULLEY RATIO	330-400 PULLEY RATIO	400-600 PULLEY RATIO	600-1000 PULLEY RATIO	HEAD
6"	*	*	(2:6) (2:5)	(3:6) (3:5)	(3:4) (4:5)	(4:4)	(5:4)	(4:3)	(5:3)	(6:3) (5:2)	(6:2)	BASIC UNIT/UNIVERSAL HEAD
	*	*	*	*	*	*	*	*	*	*	(2:6)	HIGH SPEED HEAD
5"	*	(2:6)	(2:5) (3:6)	(3:5) (3:4)	(4:5)	(4:4)	(5:4) (4:3)	(5:3)	(6:3)	(5:2) (6:2)	*	BASIC UNIT/UNIVERSAL HEAD
	*	*	*	*	*	*	*	*	*	*	(2:6) (2:5)	HIGH SPEED HEAD
4"	*	(2:6) (2:5)	(3:6) (3:5)	(3:4) (4:5)	(4.4)	(5:4) (4:3)	(5:3)	(6:3)	(5:2)	(6:2)	*	BASIC UNIT/UNIVERSAL HEAD
	*	*	*	*	*	*	*	*	*	(2:6)	(2:5) (3:6)	HIGH SPEED HEAD
3"	(2:6)	(2:5) (3:6)	(3:5) (3:4) (4:5)	(4:4) (5:4)	(4:3)	(5:3) (6:3)	*	(5:2)	(6:2)	*	*	BASIC UNIT/UNIVERSAL HEAD
	*	*	*	*	*	*	*	*	*	(2:6) (2:5)	(3:6) (3:5)	HIGH SPEED HEAD
2½"	(2:6) (2:5)	(3:6) (3:5)	(3:4) (4:5) (4:4)	(5:4) (4:3)	(5:3)	(6:3)	(5:2)	(6:2)	*	*	*	BASIC UNIT/UNIVERSAL HEAD
	*	*	*	*	*	*	*	*	(2:6)	(2:5) (3:6)	(3:5) (3:4) (4:5)	HIGH SPEED HEAD
2"	(2:6) (2:5) (3:6)	(3:5) (3:4) (4:5)	(4:4) (5:4) (4:3)	(5:3)	(6:3)	(5:2)	(6:2)	*	*	*	*	BASIC UNIT/UNIVERSAL HEAD
	*	*	*	*	*	*	*	(2:6)	(2:5)	(3:6) (3:5)	(3:4) (4:5) (4:4)	HIGH SPEED HEAD
1½"	(2:5) (3:6) (3:5)	(3:4) (4:5) (4:4)	(5:4) (4:3) (5:3)	(6:3)	(5:2) (6:2)	*	*	*	*	*	*	BASIC UNIT/UNIVERSAL HEAD
	*	*	*	*	*	(2:6)	(2:5)	*	(3:6) (3:5)	(3:4) (4:5)	(4:4) (5:4) (4:3)	HIGH SPEED HEAD

TABLE 9-2. Versa-Mil Pulley Combinations (cont.).

DIAM. OF CUTTER	20-40 PULLEY RATIO	40-60 PULLEY RATIO	60-100 PULLEY RATIO	100-140 PULLEY RATIO	140-180 PULLEY RATIO	180-230 PULLEY RATIO	230-280 PULLEY RATIO	280-330 PULLEY RATIO	330-400 PULLEY RATIO	400-600 PULLEY RATIO	600-1000 PULLEY RATIO	HEAD
1¼"	(3:6) (3:5) (3:4) (4:5)	(4:4) (5:4)	(4:3) (5:3) (6:3)	(5:2)	(6:2)	*	*	*	*	*	*	BASIC UNIT/UNIVERSAL HEAD
	*	*	*	*	(2:6)	(2:5)	*	(3:6)	(3:5)	(3:4) (4:5) (4:4)	(5:4) (4:3) (5:3)	HIGH SPEED HEAD
1"	(3:5) (3:4) (4:5) (4:4)	(5:4) (4:3)	(5:3) (6:3) (5:2)	(6:2)	*	*	*	*	*	*	*	BASIC UNIT/UNIVERSAL HEAD
	*	*	*	*	(2:6) (2:5)	(3:6)	(3:5)	*	(3:5) (4:5)	(4:4) (5:4)	(4:3) (5:3) (6:3)	HIGH SPEED HEAD
¾"	(4:5) (4:4) (5:4) (4:3)	(5:3) (6:3)	(5:2) (6:2)	*	*	*	*	*	*	*	*	BASIC UNIT/UNIVERSAL HEAD
	*	*	*	(2:6) (2:5)	(3:6)	(3:5)	(3:4) (4:5)	*	(4:4)	(5:4) (4:3) (5:3)	(6:3) (5:2)	HIGH SPEED HEAD
⅝"	(4:4) (5:4) (4:3) (5:3)	(6:3)	(5:2) (6:2)	*	*	*	*	*	*	*	*	BASIC UNIT/UNIVERSAL HEAD
	*	*	(2:6)	(2:5)	(3:5)	(3:4) (4:5)	*	(4:4)	(5:4) (4:3)	(5:3) (6:3)	(5:2) (6:2)	HIGH SPEED HEAD
½"	(5:4) (4:3) (5:3) (6:3)	(5:2) (6:2)	*	*	*	*	*	*	*	*	*	BASIC UNIT/UNIVERSAL HEAD
	*		(2:6) (2:5)	(3:5)	(3:4)	(4:5)	(4:4)	(5:4) (4:3)	(5:3)	(6:3)	(5:2) (6:2)	HIGH SPEED HEAD
⅜"	(5:3) (6:3) (5:2)	(6:2)	*	*	*	*	*	*	*	*	*	BASIC UNIT/UNIVERSAL HEAD
	*	(2:6)	(2:5)	(3:5) (3:4) (4:5)	(4:4)	(5:4) (4:3)		(5:3)	(6:3)	(5:2) (6:2)	*	HIGH SPEED HEAD

TABLE 9-2. Versa-Mil Pulley Combinations (cont.).

DIAM. OF CUTTER	20-40 PULLEY RATIO	40-60 PULLEY RATIO	60-100 PULLEY RATIO	100-140 PULLEY RATIO	140-180 PULLEY RATIO	180-230 PULLEY RATIO	230-280 PULLEY RATIO	280-330 PULLEY RATIO	330-400 PULLEY RATIO	400-600 PULLEY RATIO	600-1000 PULLEY RATIO	HEAD
¼"	(5:2) (6:2)	*	*	*	*	*	*	*	*	*	*	BASIC UNIT/UNIVERSAL HEAD
	(2:6)	(2:5)	(3:5) (3:4) (4:5)	(4:4)	(5:4) (4:3)	(5:3) (6:3)	*	(5:2)	(6:2)	*	*	HIGH SPEED HEAD
1/8"	(2:5) (3:5)	(3:4) (4:4) (4:4)	(5:4) (4:3) (5:3)	(6:3)	(5:2)	(6:2)	*	*	*	*	*	HIGH SPEED HEAD
1/16"	(3:4) (4:5) (4:4) (5:4) (4:3)	(5:3) (6:3)	(5:2) (6:2)	*	*	*	*	*	*	*	*	HIGH SPEED HEAD

NOTE: An "*" indicates a pulley ratio is not available for that size cutter and cutter speed.

APPENDIX B

WEIGHTS AND MEASURES

Length Measure

	Miles	Furlongs	Rods	Yards	Feet	inches
Mile	1	8	320	1,760	5,280	63,360
Furlong		1	40	220	660	7,920
Rod			1	5.5	16.5	198
Yard				1	3	36
Foot					1	12
Inches						I

Square Measure

	Sq. Miles	Acres	Sq. Rods	Sq. Yards	Sq. Feet	Sq. Inches
Sq. Mile	1	640	120,400	3,097,600	27,878,400	4,014,489,600
Acre		1	160	4,840	43,560	62,729,640
Sq. Rod			1	30.25	272.25	39,204
Sq. Yard				1	9	1.296
Sq. Foot					1	12
Sq. Inch						1

Dry Measure

	Bushels	Pecks	Quarts	Pints
Bushel	1	4	32	64
Peck		1	8	16
Quart			1	2
Pint				1

1 Bushel (US) = 2125.42 cubic inches
I Bushel (British) = 2218.19 cubic inches

Liquid Measure

	Hogshead	Barrels	Gallons	Quarts	Pints	Gills
Hogshead	1	2	63	252	504	2,016
Barrel		1	31.5	126	252	504
Gallon			1	8	16	32
Quart				1	2	4
Pint					1	2
Gill						1

The US gallon contains 231 cu in = 0.134 cu ft
One cubic foot = 7.481 gallons
One cubic foot weighs 62.425 lb. at 39.2'F
One gallon weighs 8.345 lb.
British Imperial gallon weighs 10 lb.
For rough calculations, I cu ft is called 71/4 gallons and 1 gallon is 8 1/3 lb.

Weight Measure

	Long tons	Tons	Pounds	Ounces	Grains
Long ton	1	1.12	2,240	35,846	250,880,000
Ton		1	2,000	32,000	224,000,000
Pound			1	16	7000
Grain					1

Angles of Arcs

	Circles	Degrees	Minutes	Seconds
Circle	1	360	21,600	1,269,000
Degree		1	60	3,600
Minute			1	60
Second				1

Water Conversion Factors

US gallons	X	8.33	=	pounds
US gallons	X	0.13368	=	cubic feet
US gallons	X	231	=	cubic inches
US gallons	X	0.83	=	British gallons
US gallons	X	3.78	=	liters

British gallons (Imperial)	X	10	=	pounds
British gallons (Imperial)	X	0.16	=	cubic feet
British gallons (Imperial)	X	277.274	=	cubic inches
British gallons (Imperial)	X	1.2	=	US gallons
British gallons (Imperial)	X	4..537		liters

Cubic inches of water (39.2'F)	X	0.036125	=	pounds
Cubic inches of water (39.2'F)	X	0.004329	=	US gallons
Cubic inches of water (39.2'F)	X	0.003607	=	British gallons
Cubic inches of water (39.2'F)	X	0.576384	=	ounces
Cubic inches of water (39.2'F)	X	62.425	=	pounds
Cubic feet (of water) (39.2'F)	X	7.48	=	US gallons
Cubic feet (of water) (39.2'F)	X	6.232	=	British gallons
Cubic feet (of water) (39.2F)	X	.028	=	tons

Pounds of water	X	7 72	=	cubic inches
Pounds of water	X	.01602	=	cubic feet
Pounds of water	X	0.12	=	US gallons
Pounds of water	X	0.10	=	British gallons

METRIC SYSTEM

Length Measures

	Kilometers	Hectometers	Dekameters	Meters	Decimeters	Centimeters	Millimeters
km	1		100	1,000	10,000	100,000	1,000,000
hm	0.1	1	10	100	1,000	10,000	100,000
dkm	0.01	0.1	1	10	100	1,000	10,000
m	0.0001	0.01	0.1	1	10	100	1,000
dm	0.0001	0.001	0.01	0.1	1	10	100
cm	0.00001	0.0001	0.001	0.01	0.1	1	10
mm	0.000001	0.00001	0.0001	0.001	0.01	0.1	1

Square Measure

1	sq.	kilometer	=	100	sq.	hectometers
I	sq.	hectometer	=	100	sq.	decameters
I	sq.	decameter	=	100	sq.	meters
I	sq.	meter	=	100	sq.	decimeters
I	sq.	decimeter	=	100	sq.	centimeters
I	sq.	centimeter	=	100	sq.	millimeters

Capacity Measure

	Kiloliters	Hectoliters	Dekaliters	Liters	Deciliters	Centiliters	Milliliters
kl	1		100	1,000	10,000	100,000	1,000,000
hl	0.1	1	10	100	1,000	10,000	100,000
dlm	0.01	0.1	1	10	100	1,000	10,000
ml	0.0001	0.01	0.1	1	10	100	1,000
dl	0.0001	0.001	0.01	0.1	1	10	100
ci	0.00001	0.0001	0.001	0.01	0.1	1	10
ml	0.000001	0.00001	0.0001	0.001	0.01	0.1	1

Weight Measure

	Kilograms	Hectograms	Dekagrams	Grams	Decigrams	Centigrams	Milligrams
kg	1		100	1,000	10,000	100,000	1,000,000
hg	0.1	1	10	100	1,000	10,000	100,000
dkg	0.01	0.1	1	10	100	19000	10,000
mg	0.0001	0.01	0.1	1	10	100	1,000
dg	0.0001	0.001	0.01	0.1	1	10	100
C9	0.00001	0.0001	0.001	0.01	0.1	1	10
mg	0.000001	0.00001	0.0001	0.001	0.01	0.1	I

BRITISH AND METRIC CONVERSION TABLES

Measure of Length

I inch	=	2.54 centimeters or 25.4 millimeters
I foot	=	0.3048 meter, 30.48 centimeters, 304.8 millimeters
I yard	=	0.9144 meters, 91.44 centimeters, 914.4 millimeters
I rod	=	5.0292 meters
I mile	=	1.609 kilometers, 1,609.34 meters
I millimeter	=	0.03937 inch
I centimeter	=	0.3937 inch
1 meter	=	39.37 inches, 3.28083 feet 1.0936 yards
1 kilometer	=	0.62137 mile

Surface Measure

1 sq. inch	=	6.452 sq. centimeters, 645.2 sq. millimeters
I sq. foot	=	0.0929 sq. meter, 929.03 centimeters
1 sq. yard	=	0.836 sq. meter
I sq. millimeter	=	0.00155 sq. inch
I sq. centimeter	=	0.155 sq. inch
I sq. meter	=	1.196 sq. yards, 10.764 sq. feet 1,550.003 sq. inches

Volume and Capacity Measure

I cubic inch	=	16.387 cubic centimeters, 16,387.06 millimeters
I cubic foot	=	0.02832 cubic meter, 28.317 cubic decimeters, 28.317 liters
I cubic yard	=	0.7645 cubic meter
I cubic centimeter	=	0.061 cubic inch
I cubic decimeter	=	61.023 cubic inches, 0.0353 cubic foot
I cubic meter	=	231 cubic inches, 1.308 cubic yards, 35.314 cubic feet 264.2 gallons

Weight Measure

I gram		
I kilogram	=	0.03527 ounce, 15.432 grains
I metric ton	=	2.2046 pounds, 35.274 ounces avoirdupois
1 grain	=	0.9842 long ton (2,240 lb.), 1.1023 ton (2,000 lb.), 2,204.6 pounds
I ounce avoirdupois	=	0.0648 grams
1 pound	=	28.35 grams
1 ton (2,000 lb.)		
I long ton (2,240 lb.)	=	0.4536 kilogram, 453.6 grams
	=	907.2 kilograms
	=	1.016 metric tons, 1,016 kilograms

Temperature Conversion

Fahrenheit		
Celsius		
	=	(Celsius x 1.8) + 32
	=	(Fahrenheit 32) /.8

POWER UNITS

1 HORSEPOWER = 33,000 FOOT-POUNDS PER MINUTE, 746 WATTS.
I WATT = 0.00134 HORSEPOWER, 44.24 FOOT-POUNDS PER MINUTE
I KILOWATT = 1,000 WATTS, 1.34 HORSEPOWER 44,240 FOOT-POUNDS PER MINUTE

WEIGHTS OF MATERIALS

Material	Weight in pounds per cubic foot	Weight in pounds per cubic inch	Weight in kilograms per cubic meter	Weight in grams per cubic centimeter
Aluminum	168.5	0.0975	2,699.11	2.6988
Brass, 80% C, 20% Z	536.6	0.3105	8,595.51	8.5946
Brass, 70% *C,* 30% Z	526.7	0.3048	8,436.92	8.4368
Brass, 60% *C,* 40% Z	521.7	0.3019	8,356.83	8.3538
Brass, *50% C,* 50% Z	511.7	0.2961	8,196.65	8.1960
Brick, common	112	0.0648	1,794.07	1.7937
Brick, fire	143	0.0827	2,290.64	2.2891
Brick, pressed	137	0.0793	2,194.53	2.1950
Brick, hard,	125	0.0723	29002.31	2.0013
Bronze, 90% *C, 10%* T	547.9	0.3171	8,776.51	8.7773
Cement portland, loose	90	0.0521	1,441.66	1.4421
Cement portland, set	183	0.1059	2,931.38	2.9313
Chromium	432.4	0.2502	6,926.38	6.9255
Clay, loose	63	0.0365	1,009.16	1.0103
Coat broke, loose, anthracite	54	0.0313	864.99	0.8664
Coal broken loose, bituminous	49	0.0294	784.90	0.7861
Concrete	137	0.0793	2,194.53	2.1950
Copper	554.7	0.3210	8,885.44	8.8852
Earth, common, loam	75	0.0434	1,201.38	1.2013
Earth, packed	100	0.0579	1,601.85	1.6027
Glass	162	0.0938	2,594.99	2.5964
Gravel dry, loose	90 to 106		1,441.66 to 1,697.96	
gravel well shaken	99 to 117		1,585.83 to 1,874.16	
Gold	19204.3	0.6969	19,291.03	19.2901
Ice	56	0.0324	897.03	0.8968
Iron, cast	450	0.2604	7,08.31	7.2078
Iron, wrought	486.7	0.2817	7,796.18	7.7974
Lead	707.7	0.4095	11,336.26	11.3349
Lime	53	0.0307	848.98	0.8498
Magnesium	108.6	0.0628	1,739.60	1.7383
Masonry	150	0.0868	2,402.77	2.4026
Masonry, dry rubble	138	0.0799	2,210.55	2.2116
Molybdenum	636.5	0.3683	10,195.75	10.1945
Mortar, set	103	*0.05%*	1,649.90	1.6497
Nickel	549	0.3177	8,794.13	8.7939
Petroleum, benzene	46	0.0266	736.85	0.7363
Petroleum gasoline	42	0.0243	672.78	0.6726
Plaster of Paris	112	0.0648	1,794.07	1.7937
Platinum	1,333.5	0.7717	21,360.62	21.3606
Quartz	162	0.0938	2,594.99	2.5964

WEIGHTS OF MATERIALS (continued)

Material	Weight in pounds per cubic foot	Weight in pounds per cubic inch	Weight in kilograms per cubic meter	Weight in grams per cubic centimeter
Salt, common	48	0.0278	768.88	0.7695
Sand dry, loose	90 to 106		1,441.66 to 1,697.96	
Sand, well shaken	99 to 106		1,585.83 to 1,874.16	
Silver	657	0.3802	10,524.13	10.5239
Snow, freshly fallen	5 to 12		80.09 to 192.22	
Snow, wet and compacted	15 to 50		240.28 to 800.92	
Steel	490	0.2836	7,849.05	7.8500
Stone, gneiss	168	0.0972	2,691.10	2.6905
Stone, granite	168	0.0972	2,691.10	2.6905
Stone, limestone	162	0.0938	2,594.99	2.5964
Stone, marble	168	0.0972	2,691.10	2.6905
Stone, sandstone	143	0.0828	2,290.64	2.2919
Stone, shale	162	0.0938	2,594.99	2.5964
Stone, slate	175	0.1013	21803.23	2.8040
Tar	75	0.0434	1,201.38	1.2013
Tin	455	0.2632	7,288.40	7.2881
Titanium	280.1	0.1621	4,486.77	4.4869
Tungsten	1,192	0.6898	19,094.00	19.0936
Water, fresh	62.5	0.0362	1,001.15	1,0020
Water, sea water	64	0.0370	1,025.18	1.0242
Wood, dry				
As, black	28	0.0162	448.52	0.4484
Ask white	41	0.0237	656.76	0.6560
Beech	45	0.0260	720.83	0.7197
Birch	44	0.0255	704.81	0.7058
Birch paper	38	0.0220	608.70	0.6090
Cedar, Alaska	31	0.0179	496.57	0.4955
Cedar, eastern red	33	0.0191	528.61	0.5287
Cedar, southern white	23	0.0133	368.42	0.3681
Cedar, western re	23	0.0133	368.42	0.3681
Cherry	42	0.0203	672.78	0.6726
Cherry, black	35	0.0203	560.65	0.5619
Chestnut	41	0.0237	656.76	0.6560
Cypress	30	0.0174	480.55	0.4816
Elm	45	0.0260	720.83	0.7197
Hemlock	29	0.0168	464.54	0.4650
Hickory	49	0.0284	784.90	0.7861
Locust	46	0.0266	736.85	0.7363
Mahogany	53	0.0307	848.98	0.8498
Maple, hard	43	0.0249	688.79	0.6892
Maple, white	33	0.0191	528.61	0.5287
Oak, chestnut	54	0.0313	864.99	0,8664
Oak, live	59	0.0341	954.09	0.9439
Oak, red black	41	0.0237	656.76	0.6560
Oak, white	46	0.0266	738.85	0.7363

WEIGHTS OF MATERIALS (Continued)

Material	Weight in pounds per cubic foot	Weight in pounds per cubic inch	Weight in kilograms per cubic meter	Weight in grams per cubic centimeter
Pine, white	26	0.0150	416.48	0.4152
Pine, yellow, longleaf	44	0.0255	656.76 0.	7058
Pine, yellow, short leaf	36	0.0208	576.66	0.5757
Poplar	28	0.0162	448.52	0.4484
Red wood California	26	0.0150	416.48	0.4152
Spruce, white, black	27	0.0156	432.50	0.4318
Sycamore	37	0.0214	592.68	0.5923
Walnut black	38	0.0220	608.70	0.6089
Walnut, white	26	0.0150	416.48	0.4152
Zinc	439.3.....	0.2542	7,036.91	7.0362

APPENDIX C

FORMULAS

SINE BAR OR SINE PLATE SETTING

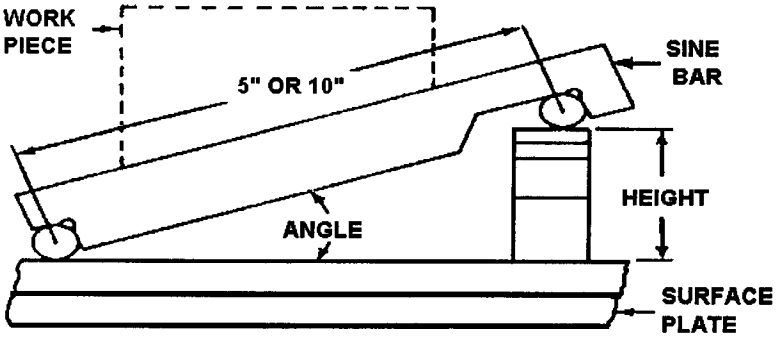

Sine bars or sine plates usually have a length of 5 inches or 10 inches. These standard lengths are commonly used by the tool maker or inspector. The sine bar or sine plate is used for accurately setting up work for machining or for inspection. Gage blocks are usually used for establishing the height.

Rule for determining the height of the sine bar setting for a given angle: multiply the sine of the angle by the length of the sine bar. The sine of the angle is taken from the tables of trigonometric functions.

Problem: What would be the height to set a sine bar for establishing an angle of 230 41'? **Solution:** The sine of 23'41' is 0.40168. Multiply this by 5 because a 5-inch sine bar is used; 5 x 0.40168 = 2.0084, which is the height to set the sine bar.

RULES FOR FIGURING TAPERS

TO FIND	GIVEN	RULE
Taper per inch	Taper per foot	Divide the taper per foot by 12.
Taper per foot	Taper per inch	Multiply the taper per inch by 12.
Taper per foot	End diameters and length of taper in inches	Subtract small diameter from large, divided by length of taper, and multiply quotient by 12.
Diameter at small end in inches	Large diametre, length of taper in inches, and taper foot	Divide taper per foot by 12, multiply by length of taper, and subtract from large diameter.
Diameter at large end in inches	Small diameter, length of taper in inches, and taper per foot	Divide taper per foot by 12, multiply by length of taper, and add results to small diameter.
Distance between two given diameters in inches	Taper per foot and two diameters in inches	Subtract small diameter from large, divide remainder by taper per foot and multiply quotient by 12.
Amount of taper in a certain length given in inches	Taper per foot	Divide taper per foot by 12 and multiply by given length of tappered part

To find the circumference of a circle Ξ xD or D / 0.3183.

To find the diameter of a circle 0.31831 x C or C / Ξ.

To find the area of a circle Ξ r^2.

To find size of round stock needed to machine a hexagon, D = 1.1547 x distance across the flats

To find size of round stock needed to machine a square, D = 1.4142 x distance across the flats

To find the area of a square, square one side

To find the area of a rectangle, multiply length times width

To find the volume of a cube, multiply length times width times depth

To find the volume of a square prism, multiply length times width times depth

To find the volume of a cylinder, multiply Ξ times radius squared times height

To find the area of a triangle, multiply base times height divided by 2

To find the area of a ring, subtract the area of inside diameter from the area of the outside diameter.

TRIGONOMETRY FORMULAS

Formulas for Finding Functions of Angles

$$\frac{\text{Side opposite}}{\text{Hypotenuse}} = \text{sine}$$

$$\frac{\text{Side adjacent}}{\text{Hypotenuse}} = \text{cosine}$$

$$\frac{\text{Side opposite}}{\text{Side adjacent}} = \text{tangent}$$

$$\frac{\text{Side adjacent}}{\text{Side opposite}} = \text{cotangent}$$

$$\frac{\text{Hypotenuse}}{\text{Side adjacent}} = \text{secant}$$

$$\frac{\text{Hypotenuse}}{\text{Side opposite}} = \text{cosecant}$$

Formulas for Finding the Length of Slides for Right-Angle Triangle When an Angle and Side are Known

Length of side adjacent	Hypotenuse * sine Hypotenuse/cosecant Side adjacent * tangent Side adjacent/cotangent
Length of side adjacent	Hypotenuse * sine Hypotenuse/secant Side opposite * cotangent Side opposite/tangent
Length of hypotenuse	Side opposite * cosecant Side opposite/sine Side adjacent * secant Side adjacent/cosine

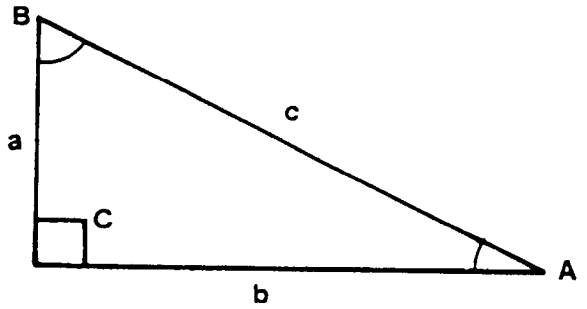

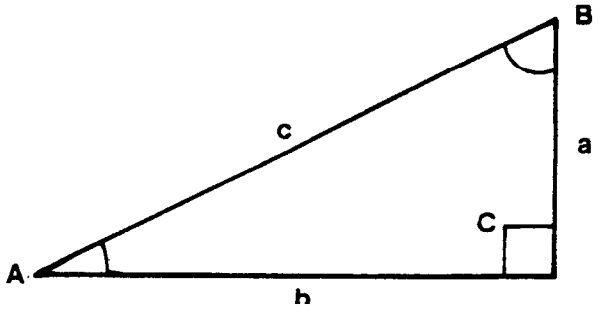

RIGHT TRIANGLES

KNOWN	SIDE a	TO FIND SIDE b	SIDE c
Side c, Angle B	Cosine B x c or $\frac{c}{\text{Secant B}}$	Sine B x c or $\frac{c}{\text{Cosecant B}}$	Angle A = 90° - B
Side c, Angle A	Sine A x c or $\frac{c}{\text{Cosecant A}}$	Cosine A x c or $\frac{c}{\text{Secant A}}$	Angle B = 90° - A
Side b, Angle B	Cotangent B x b or $\frac{b}{\text{Tangent B}}$	Angle A = 90° - B	Cosecant B x b or $\frac{b}{\text{Sine B}}$
Side b, Angle A	Tangent A x b or $\frac{b}{\text{Cotangent A}}$	Angle B = 90° - A	Secant A x b or $\frac{b}{\text{Cosine A}}$
Side a, Angle B	Angle A = 90° - B	Tangent B x b or $\frac{a}{\text{Cotangent B}}$	Secant B x b or $\frac{a}{\text{Cosine B}}$
Side a, Angle A	Angle B = 90° - A	Cotangent A x a or $\frac{a}{\text{Tangent A}}$	Cosecant A x a or $\frac{a}{\text{Sine A}}$
	ANGLE A	**ANGLE B**	**SIDE x**
Side c and b	Cosine A = b+c or Secant A = c+b	Sine B = b+c or Cosecant B = c+b	Side A = $\sqrt{c^2 - b^2}$
Side c and a	Sine A = a+c or Cosecant A = c+a	Cosine B = a+c or Secant B = c+a	Side b = $\sqrt{c^2 - a^2}$
Side c and a	Tangent A = a+b or Cotangent A = b+a	Cotangent B = a+b or Tangent B = b+a	Side c = $\sqrt{a^2 - b^2}$

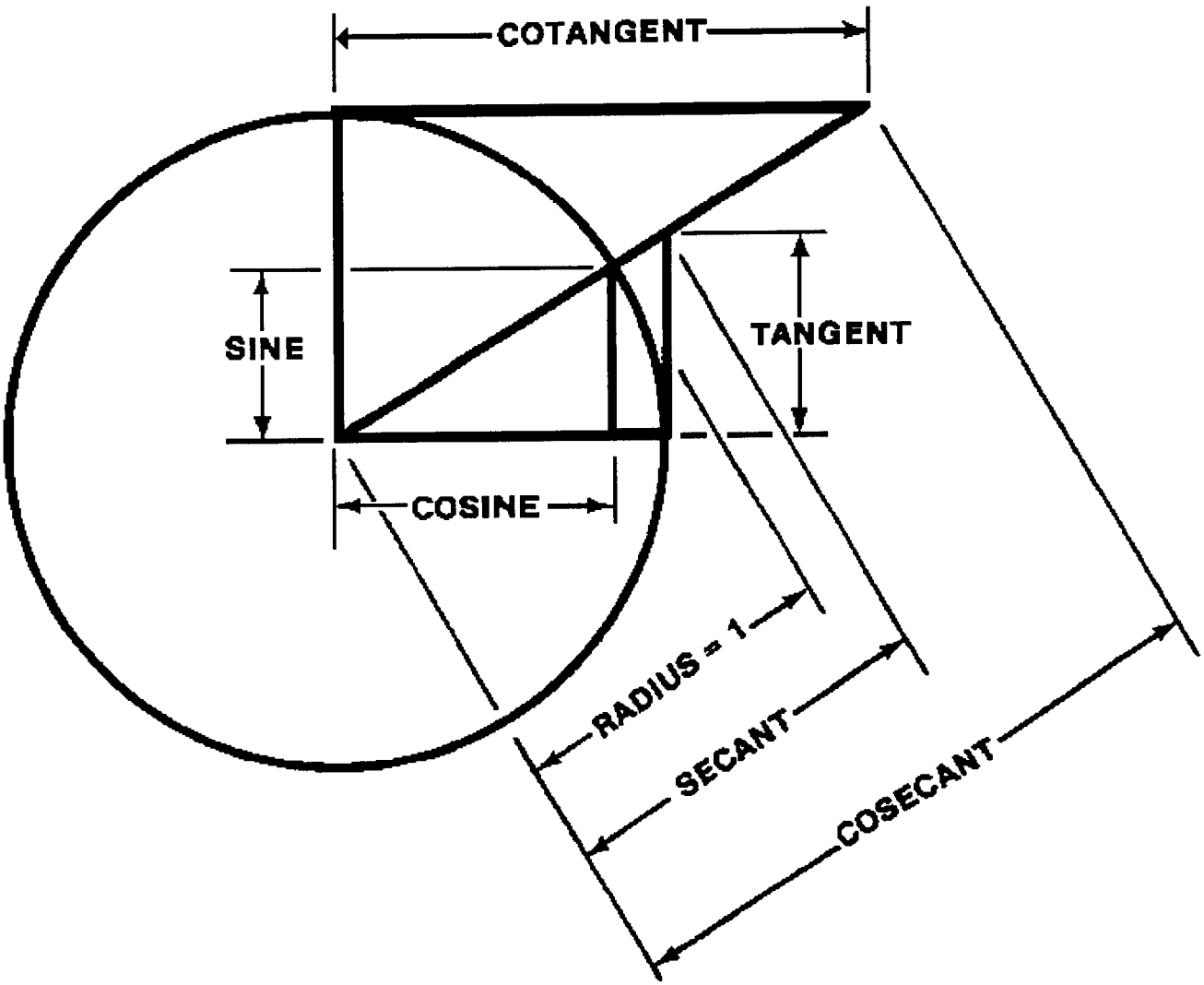
COTANGENT
SINE
TANGENT
COSINE
RADIUS = 1
SECANT
COSECANT

GLOSSARY

ACRONYMS AND ABBREVIATIONS

TC - Training Circular

TM - Technical Manual

AR - Army Regulation

DA - Department of the Army

RPM - revolutions per minute

SAE - Society of Automotive Engineers

SFPM - surface feet per minute

tpf -taper per foot

tpi taper per inch

UNC - Unified National Coarse

UNF - Unified National Fine

SF -standard form

Med - medical

WRPM - revolutions per minute of workpiece

FF - fraction of finish

WW - width of wheel

TT - table travel in feet per minute

sd - small diameter

Id - large diameter

ID - inside diameter

TOS- Intentional Organization for Standardization

LH - left hand

NC - National Coarse

NF - National Fine

OD - outside diameter

RH - right hand

CS - cutting speed

AA - aluminum alloys

IPM - feed rate in inches per minute

FPM - feet per minute of workpiece

pd - pitch diameter

tan L - tangent angle formula

It - length of taper

DEFINITIONS

abrasive - natural - (sandstone, emery, corundum. diamonds) or artificial (silicon carbide, aluminum oxide) material used for making grinding wheels, sandpaper, abrasive cloth, and lapping compounds.

abrasive wheels - Wheels of a hard abrasive, such as Carborundum used for grinding.

accurate - Conforms to a standard or tolerance.

Acme thread - A screw thread having a 29 degree included angle. Used largely for feed and adjusting screws on machine tools.

acute angle - An angle that is less than 90 degrees.

adapter - A tool holding device for fitting together various types or sizes of cutting tools to make them interchangeable on different machines.

addendum - That portion of a gear tooth that extends from the pitch circle to the outside diameter.

align - To adjust or set to a line or center.

allowance - The prescribed difference in dimensions of mating parts to provide a certain class of fit.

alloy - A metal formed by a mixture of two or more different metals.

angle iron - An iron or steel structural member that has been cast, rolled, or bent (folded) so that its cross section is L-shaped.

angle plate - A precision holding fixture made of cast iron. steel, or granite. The two principal faces are at right angles and may be slotted for holding the work **or** clamping to a table.

annealing - The controlled heating and cooling of a metal to remove stresses and to make it softer and easier to work with.

anvil - A heavy iron or steel block upon which metal is forged or hammered-. also the fixed jaw on a micrometer against which parts are measured.

apron - That portion of a lathe carriage that contains the clutches, gears, and levers for moving the carriage. It also protects the mechanism.

arbor - A shaft or spindle for holding cutting tools; most usually on a milling machine.

arbor press - A hand-operated machine tool designed for applying high pressure for the purpose of pressing together or removing parts.

assembly - A unit of fitted parts that make up a mechanism or machine, such as the headstock assemble of a lathe.

automatic stop - A device which may be attached to any of several parts of a machine tool to stop the operation of the machine at any predetermined point.

axis - The line, real or imaginary, passing through the center of an object about which it could rotate; a point of reference.

babbitt - An antifriction metal alloy used for bearing inserts; made of tin, antimony, lead, and copper.

back gears - Gears fitted to a machine to increase the number of spindle speeds obtainable with a cone or step pulley belt drive.

back rake - The angular surface ground back from the cutting edge of cutting tools. On lathe cutting tools. the rake is positive if the face slopes down from the cutting edge toward the shank, and negative if the face slopes upward toward the shank.

backlash - The lost motion or looseness (play) between the faces of meshing gears or threads.

bandsaw - A power saw. the blade of which. is a continuous, narrow, steel band having teeth on one edge and passing over two large pulley wheels.

bar stock - Metal bars of various lengths, made in flat, hexagon, octagon, round, and square shapes from which parts are machined.

bastard - Threads, parts, tools, and sizes that are not standard, such as 'bastard nuts,' "bastard plus," "bastard fittings,' and so forth. The term also refers to a standard coarse cut file.

bearing - Rollers, and balls placed between moving parts to reduce friction and wear.

bed - One of the principal parts of a machine tool, having accurately machined ways or bearing surfaces for supporting and aligning other parts of the machine.

bell mouth - The flaring or tapering of a machined hole, usually made at the entrance end because of misalignment or spring of the cutting tool.

bench grinder - A small grinding machine for shaping and sharpening the cutting edges of tools.

bench lathe - A small lathe mounted on a bench or table.

bench work - Work done primarily at a bench with hand tools. occasionally supplemented by small power-driven tools.

bevel - Any surface that is not at right angles to another surface. Also, the name given a tool used for measuring, laying out, or checking the accuracy of work machined at an angle or bevel.

bit, tool (cutter) - A hardened steel bar or plate that is shaped according to the operation to be performed and the material to be machined.

blind bole - A hole made in a workpiece that does not pass through it.

block, Jo - Shop name for a Johannson gage block, a very accurate measuring device.

blowhole - A defect in a casting caused by trapped steam or gas.

blueprint - A pen or ink line drawing reproduced (printed) on sensitized paper by direct exposure.

blue vitriol copper sulfate - A layout solution which turns a copper color when applied to a clean. polished metal surface.

bond - The material that holds the abrasive grains together to form a grinding wheel.

bore - To enlarge and finish the surface of a cylindrical hole by the action of a rotating boring bar (cutting tool) or by the action of a stationary tool pressed (fed) against the surface as the part is rotated.

boring bar (cuffer bar) - A combination tool holder and shank.

boring tool - A cutting tool in which the tool bit'. the boring bar and, in some cases, the tool holder are incorporated in one solid piece.

boss - A projection or an enlarged section of a casting through which a hole may be machined.

brass - A nonferrous alloy consisting essentially of copper and zinc.

brazing - Joining metals by the fusion of nonferrous alloys having a melting temperature above 800 degrees F, but below that of the metals being joined.

brine - A saltwater solution for quenching or cooling when heat treating steel.

Brinell hardness - A method of testing the hardness of a metal by controlled pressure of a hardened steel ball of a given size.

broach - A long, tapered cutting tool with serration's which, when forced through a hole or across a surface, cuts a desired shape or size.

bronze - A nonferrous alloy consisting essentially of copper and tin.

buff - To polish to a smooth finish of high luster with a cloth or fabric wheel to which a compound has been added.

bull gear - The large crank gear of a shaper.

burnishing - The process of finishing a metal surface by contact with another harder metal to improve it. To make smooth or glossy by or as if by rubbing; polish.

burr - The sharp edge left on metal after cutting or punching-, also, a rotary cutting tool designed to be attached to a drill.

bushing - A sleeve or a lining for a bearing or a drill jig to guard against wear.

caliper - A device used to measure inside or outside dimensions.

caliper, gear tooth - A special caliper used to measure both the "choral thickness" and the depth of a gear tooth.

cam - A device for converting regular rotary motion to irregular rotary or reciprocating motion. Sometimes the effect of off-center lathe operations.

carbide tool bits - Lathe cutting tools to which carbide tip inserts have been brazed, to provide cutting action on harder materials than the high speed cutters are capable of.

carbon steel - A broad term applied to tool steel other than high-speed or alloy steel.

Carborundum - A trade name for an abrasive compounded of silicon and carbon (silicon carbide).

carbonizing - The process of adding carbon to the outer surface of steel to improve its quality by heat treating it in contact with a carbonaceous material.

carriage - A principal part of a lathe that carries the cutting tool and consists of the saddle, compound rest. and apron.

case hardening - A heat treating process, basically carbonizing. that makes the surface layer or case of steel substantially harder than the interior or core.

castigated nut (castle nut) - A nut with grooves cut entirely across the top face.

casting - A part made by pouring molten metal into a mold.

cathead - A collar or sleeve which fits loosely over a shaft to which it is clamped by setscrews.

center - A point or axis around which anything revolves or rotates. 1 n the lathe. one of the parts upon which the work to be turned is placed. The center in the headstock is referred to as the "live' center and the one mounted in the tailstock as the 'dead' center.

center, dead - A center that does not rotate; commonly found on the tailstock of a lathe. Also, an expression for the exact center of an object.

center drill - A combined countersink and drill used to prepare work for mounting centers.

center gage - A small ', flat gage having 60 degree angles that is used for grinding and setting the thread cutting tools in a lathe. It may also be used to check the pitch of threads and the points of center.

center, half male - A dead center that has a portion of the 60 degree cone cut away.

center head - A part of a combination square set that is used to find the center of or to bisect a round or square workpiece.

center, live - A center that revolves with the work. Generally. this is the headstock center; however, the ball bearing type tailstock center is also called a live center.

center punch - A pointed hand tool made of hardened steel and shaped somewhat like a pencil.

ceramic - A new type of cutting tool material made of aluminum oxide . or silicon carbide that is finding increased use where high speed and resistance to high temperatures and wear are factors.

chain gearing (chain drive) - Power transmission by means of an endless chain running around chain wheels (chain pulley) and/or sprocket wheels.

chamfer - The bevel or angular surface cut on the edge or a corner of a machined part.

chasing threads - Cutting threads in a lathe or screw machine.

chatter - The vibrations caused between the work and the cutting tool which leave distinctive tool marks on the finished surface that are objectionable.

chip breaker - A small groove ground back of the cutting edge on the top of a cutting tool to keep the chips short.

chipping - The process of cutting metal with a cold chisel and hammer.

chisel - Any one of a variety of small hand cutting tools, generally wedge-shaped.

chuck - A device on a machine tool to hold the workpiece or a cutting tool.

chuck, independent jaw - A chuck, each of whose jaws (usually four) is adjusted with a screw action independently of the other jaws.

chuck, universal (self-centering chuck, concentric chuck) - A chuck whose jaws are so arranged that they are all moved together at the same rate by a special wrench.

circular pitch - The distance measured on the pitch circle from a point on a gear tooth to the same point on the next gear tooth.

clearance - The distance or angle by which one objector surface clears another.

clearance angle - The angle between the rear surface of a cutting tool and the surface of the work at the point of contact.

climb milling - A method of milling in which the work table moves in the same direction as the direction of rotation of the milling center. Sometimes called down cutting or down milling.

clutch, friction (friction coupling) - A shaft coupling used where it is necessary to provide a connection that can be readily engaged or disengaged while one of the shafts is in motion.

cog - A tooth in the rim of a wheel - a gear tooth in a gear wheel.

cold-rolled steel - Steel that has been rolled to accurate size and smooth finish when made. In contrast, hot-rolled steel may have a rough, pitted surface and slag inclusion.

collet - A precision work holding chuck which centers finished round stock automatically when tightened. Specialized collets are also a-, available in shapes for other than round stock.

color method - A technique of heat treating metal by observing the color changes that occur to determine the proper operation to perform to achieve the desired results.

combination square - A drafting and layout tool combining a square, a level. A protractor, and a center head.

compound (rest) - The part of a lathe set on the carriage that carries the tool post and holder. It is designed to swing in any direction and to provide feed for turning short angles or tapers.

concave - A curved depression in the surface of an object.

concentric - Accurately centered or having a common center.

cone pulley - A one-piece stepped pulley having two or more diameters.

contour - The outline of an object.

convex - The curved surface of a cylinder, as a sphere when viewed from without.

coolant - A common term given to the numerous cutting fluids or compounds used with cutting tools to increase the tool life and to improve surface finish on the material.

corrosion - Oxidation (rusting) or similar chemical change in metals.

counterbore - To enlarge the top part of a hole to a specific size, as for the head of a socket-head or cap screw. Also, the tool that is used.

countersink - To enlarge the top part of a hole at an angle for a flat-head screw. Also, the tool that is used.

cross feed - The feed that operates across the axis of the workpiece or at right angles to the main or principal feed on a machine.

cross section - A view showing an internal structure as it would be revealed by cutting through the piece in any plane.

crucible steel - A high-grade tool steel made by melting selected materials in a crucible.

cutting fluid - A liquid used to cool and lubricate the cutting to improve the work surface finish.

cutting speed - The surface speed of the workpiece in a lathe or a rotating cutter, commonly expressed in feet per minute (FPM) and converted to revolutions per minute (RPM) for proper setting on the machine.

cutting tool - A hardened piece of metal (tool steel) that is machined and ground so that it has the shape and cutting edges appropriate for the operation for which it is to be used.

cyaniding - A process of case hardening steel by heating in molten cyanide.

dead center - See center, dead.

dead smooth - The term applied to the finest cut of a file.

deburr - To remove sharp edges.

decalescence - A decrease in temperature that occurs while heating metal through a range in which change in structure occurs.

dedendum - The depth, or that portion of a gear tooth from the pitch circle to root circle of gear.

diametral pitch - Ratio of the number of teeth on a gear to the number of inches of pitch diameter or the number of teeth to each inch of pitch diameter.

die - A tool used to form or stamp out metal parts', also, a tool used to cut external threads.

die stock - The frame and two handles (bars) which hold the dies (chasers) used for cutting (chasing) external screw threads.

dividers, spring - Dividers whose legs are held together at the hinged end by the pressure of a C-shaped spring.

dividing head (index bead) - A machine tool holding fixture which positions the ",-work for accurately spacing holes. slots. flutes. and gear teeth and for making geometric shapes. When geared to the table lead screw, it can be used for helical milling operations.

Do-Al l saw - A trade name given to a type of band saw used for sawing metal.

dog - A clamping device (lathe dog) used to drive work being machined between centers. Also, a part projecting on the side of a machine worktable to trip the automatic feed mechanism off or to reverse the travel.

dovetail - A two-part slide bearing assembly used in machine tool construction for the precise alignment and smooth operation of the movable components of the machine.

dowel - A pin fitted or keyed in two adjacent parts to accurately align the parts when assembling them.

down feed (climb cutting, climb milling)- A seldom used method of feeding work into milling cutters. The work is fed in the same direction as the portion of the cutter which comes in contact with it.

draw - See tempering.

dressing - The act of removing the glaze and dulled abrasives from the face of a grinding wheel to make it clean and sharp. See truing.

drift - A tapered. flat steel used to remove drills and other tapered shank tools from spindles, sockets, or sleeves. Also a round, tapered punch used to align or enlarge holes.

drill - A pointed tool that is rotated to cut holes in material.

drill bushing - A hardened steel guide inserted in jigs, fixtures. or templates for the purpose of providing a guide for the drill in drilling holes in their proper or exact location.

drill, center - A combination drill and countersink-

drill chuck - A device used to grip drills and attach them to a rotating spindle.

drill, twist - A commonly used metal-cutting drill, usually made with two flutes running around the body.

drill jig - A jig which holds parts or units of a structure and. by means of bushings, guides the drill so that the holes are properly located.

drill press - An upright power-driven machine for drilling holes in metal, wood, or other material.

drill press, radial (radial drill) - A machine tool for drilling holes. The drill head is so supported that it may be moved over a large area to drill holes in objects of large size or to drill several holes in an object without shifting the object.

drill press - A drilling machine with a counterbalanced spindle which makes it possible for the operator to control accurately the rate at which the drill is fed into the work. The sensitive drill press usually contains drills that are less than 1/2 inch in diameter and which rotate at high speeds.

drill rod - A high-carbon steel rod accurately ground to size with a smooth finish. It is available in many sizes and is used extensively in tool making.

drill sleeve - An adapter with an internal and external taper which fits tapered shank tools such as drills or reamers to adapt them to a larger size machine spindle.

drill socket - An adapter similar to a sleeve except that it is made to adapt a larger tapered-shank tool to a smaller size spindle.

drill, twist - A commonly used metal-cutting drill, usually made with two flutes running around the body.

drive fit - One of several classes of fits in which parts are assembled by pressing or forcing one part into another.

ductility - The property of a metal that permits it to be drawn. rolled, or hammered without fracturing or breaking.

eccentric - A circle not having a geometric center. Also, a device such as a crankshaft or a cam for converting rotary motion to reciprocating motion.

element - Matter which cannot be broken up into simpler substances by chemical action, that is, whose molecules are all composed of only one kind of atom.

elongation - Lengthening or stretching out.

emery - A natural abrasive used for grinding or polishing. It is being largely replaced by artificial abrasives.

emulsion - A coolant formed by mixing soluble oils or compounds with water.

extruded - Metal which had been shaped by forcing through a die.

extrusion - A shaped part resulting from forcing a plastic material such as lead, tin. aluminum. zinc., copper, rubber, and so forth. through a die opening

EZY OUT (trademark) - A tool for removing broken bolts or studs from a hole.

face - To machine a flat surface, as in the end of a shaft in the lathe. The operation is known as facing.

face milling - Milling a large flat surface with a milling cutter that operates in a plane that is at right angles to its axis.

faceplate - A large circular plate with slots and holes for mounting the workpiece to be machined. It is attached to the headstock of a lathe.

facing - The process of making a flat or smooth surface (usually the end) on a piece of stock or material.

fatigue - The effect on certain materials, especially metals, undergoing repeated stresses.

feed - The rate of travel of a cutting tool across or into the work-, expressed in inches per minute or in inches per revolution.

feed mechanism - The mechanism, often automatic. which controls the advancing movement (feed) of the cutting tools used in machines.

female part - A concave piece of equipment which receives a mating male (convex) part.

ferrous - A metal alloy in which iron is the major ingredient.

rile test - A test for hardness in which a corner of a file is run across the piece of metal being tested. The hardness is shown by the dent the file makes.

fillet - A curved surface connecting two surfaces that form an angle.

fishtail - A common name for the center gage. It is used to set thread cutting tools and has scales on it for determining the number of threads per inch.

fit - The relation between mating or matching parts, that is, the amount of, or lack of. play between them.

fitting - Any small part used in aircraft construction.

fixture - A production work-holding device used for machining duplicate workplaces. Although the term is used interchangeably with a jig, a fixture is not designed to guide the cutting tools as the jig does.

flange - A relatively thin rim around a part.

flash - A thin edge of metal formed at the parting line of a casting or forging where it is forced out between the edges of the form or die.

flute - The groove in a cutting tool which provides a cutting edge and a space for the chips to escape and permits the cutting fluids to reach the cutting edges.

fly cutter - A single-point cutter mounted on a bar in a fly cutter holder or a fly cutter arbor- used for special applications for which a milling cutter is not available.

follower rest - A support for long, slender work turned in the lathe. It is mounted on the carriage, travels close to and with the cutting tool, and keeps the work from springing away.

footstock - Part of an indexing, attachment which has a center and serves the same purpose as the tail stock of a lathe.

force fit - A fitting which one part is forced of pressed into another to form a single unit. There are different classes of force fits depending on standard limits between mating parts.

forge - To form or shape heated metal by hammering. Also. the name of the unit used for heating metal, as the blacksmith's forge.

formed cutters - Milling cutters which will produce shaped surfaces with a single cut', and so designed that they may be sharpened without. changing their outline or shape.

forming tool - Tool ground to a desired shape to reproduce this shape on the workpiece.

free cut - An additional cut with no advancement of depth.

free cutting steel - Bar stock containing a high percentage of sulfur. making it very easy to machine. Also known as Bessemer screw stock.

free fit - A class of fit intended for use where accuracy is not essential. or where large temperature variations are likely to be encountered, or both conditions.

fulcrum - The point or support on which a lever turns.

gage - Any one of a large variety of devices for measuring or checking the dimensions of objects.

gage blocks - Steel blocks machined to extremely accurate dimensions.

gage, center - See center gage.

gage, depth - A tool used in measuring the depth of holes or recesses.

gage, drill - A flat steel plate drilled with holes of various sizes, each marked with the correct size or number. into which small twist drills may be fitted to determine the size of their diameters.

gage, drill point - A gage use to check the 59" angle on drills.

gage, feeler (thickness gage) - A gage consisting of a group of very thin blades, each of which is accurately ground to a specific thickness.

gage, indicating (dial indicator) - A gage consisting of a dial, commonly graduated (marked) in thousandths of an inch, to which is fastened an adjustable arm.

gage, radius (fillet gage) - Any one of a number of small. flat, standard-shaped metal leafs or blades used for checking the accuracy of regular concave and convex surfaces.

gage, screw pitch - A gage consisting of a group of thin blades. used for checking the number of screw threads per unit of distance, usually per inch, on a screw, bolt, nut, pipe, or fitting.

gage, surface (scribing block) - A gage used to check the accuracy, of plane surfaces, to scribe lines at desired distances from a given surface and to check the height of a point or points on a piece of work from a given surface.

gage, telescoping - A T-shaped gage used to measure the diameter **or** width of holes.

gang milling - A milling setup where a number of cutters are arranged on an arbor so that several surfaces can be machined at one time. It is commonly used for production purposes.

gear blank - A stamping, casting. or any, piece of material from which a gear is to be machined. It is usually a disk.

gib - A tapered strip of metal placed between the bearing surface of two machine parts to ensure a precision fit and provide an adjustment for wear.

hacksaw - A metal blade of hardened steel having small, close teeth on one edge. It is held under tension in a U-shaped frame.

half nut - A lever-operated mechanism that resembles a split nut that can be closed on the lead screw of a lathe when threads are being cut.

handwheel - Any adjusting or feeding mechanism shaped like a wheel and operated by hand.

hardening - A heat-treating process for steel which increases its hardness and tensile strength and reduces its ductility.

hardness tests - Tests to measure the hardness of metals.

headstock - The fixed or stationary end of a lathe or' similar machine tool.

heat treatment - The process of heating and cooling a solid metal or alloy to obtain certain desired properties or characteristics.

helical gear - A gear with teeth cut at some angle other than at a right angle across the face of the gear, thus permitting more than one tooth to be engaged at all times and providing a smoother and quieter operation than the spur gear.

helix - A path formed as a point advances uniformly around a cylinder, as the thread on a screw or the flutes on a drill.

helix angle - The angle between the direction of the threads around a screw and a line running at a right angle to the shank.

hex - A term used for anything shaped like a hexagon.

high-speed steel - An alloy steel commonly used for cutting tools because of its ability to remove metal at a much faster rate than carbon steel tools.

hob - A cylindrical cutting tool shaped like a worm thread and used in industry to cut gears.

hobbing - The operation of cutting gears with a bob.

hog - To remove in excess of what is considered normal, sometimes causing accidents or tool breakage; also, to rough out haphazardly.

hole saw - A cutting tool used to cut a circular groove into solid material.

honing - The process of finishing ground surfaces to a high degree of accuracy and smoothness with abrasive blocks applied to the surface under a light controlled pressure. and with a combination of rotary and reciprocating motions.

hot-rolled steel - Steel which is rolled to finished size. while hot. Identified by a dark oxide scale left on the surface.

idler - A gear or gears placed between two other gears to transfer motion from one gear to the other gear without changing their speed or ratio.

independent chuck - A chuck in which each jaw may be moved independently of the others.

indexing - The process of positioning a workpiece for machining it into equal spaces. dimensions. or angles using an. index or dividing head.

indexing fixture - A complete indexing unit composed of a dividing head and rootstock. (See dividing head.)

index plate - A metal disk or plate punched with many holes arranged in a series of rings. one outside the other each ring containing a different number of holes.

indicator - A precision instrument which shows variations of thousandths of an inch or less when testing the trueness or alignment of a workpiece, fixture, or machine.

inserted-tooth cutter - A milling cutter designed with replaceable cutting tooth inserts to save the expense of a new cutter whenever the teeth become damaged or worn. Generally, they are made 6 inches or more in diameter.

intermediate gear - See idler.

jack, leveling - Small jacks (usually screw jacks) for leveling and holding work on planner beds and similar places.

Jacobs chuck - Common term for the drill chuck used in either the headstock spindle or in the tailstock for holding straight-shank drills, taps, reamers, or small diameter workplaces.

Jarno - A standard taper having 0.600-inch taper per foot used on some machine tools.

jig - A production work holding device that locates the workpiece and guides the cutting tool (see fixture).

Johannson blocks (Jo blocks)- Common term for the precision gage blocks used and accepted as dimensional standards by machinists, toolmakers. and inspectors.

kerf - The width of cut made by a Saw.

key - One of the several types of small metal objects designed to fit mating slots in a shaft and the hub of a gear or pulley to provide a positive drive between them: also. the name of the T-handle wrench used on chucks.

key seat - A recessed groove (slot) machined into a shaft or a part going on the shaft (usually a wheel or gear).

knee - That part of a column of a knee-type milling machine which carries the saddle and the table and provides the machine with vertical feed adjustments. Also, the name of a precision angle plate called a "toolmaker's knee".

knurl - A decorative gripping surface of straight-line or diagonal design made by uniformly serrated rolls called knurls.

knurling - The process of finishing a part by scoring (pressing) patterns on the surface of the work.

land - That surface on the periphery of a rotary cutting tool, such as a milling cutter. drill tap, or reamer, which joins the face of the flute or tooth to make up the basic cutting edge.

lap - A tool made of soft metal and charged With fine abrasives for precision finishing of metal surfaces. Also, to perform the operation using a lap-

lard oil - A cutting oil made from animal fats usually mixed with mineral oils to reduce its cost and improve its qualities.

layout - To locate and scribe on blank stock the shape and size dimensions required to machine or form the part.

lead - The distance a thread will advance along its axis in one complete revolution. Also, a heavy, soft', malleable metal having a low melting point. It has a bright. silvery color when freshly cut or poured and turns to a dull gray with aging.

lead hole - See pilot hole.

lead screw - The long, precision screw located in front of the lathe bed geared to the spindle, and used for cutting threads. Also, the table screw on the universal milling machine when geared to the indexing head for helical milling.

limits - The smallest and largest dimension which are tolerable (allowed).

lip of a drill - The sharp cutting edge on the end of a twist drill.

live center - See center, live.

loading - A condition caused by grinding the wrong material with a grinding wheel or using too heavy a grinding action.

machinability - The degree of difficulty with which a metal may be machined; may be found in appropriate handbooks.

machine tool - A power-driven machine designed to bore, cut, drill, or grind metal or other materials.

machining, Finish - Machining a surface to give it the desired finish.

machinist - A person who is skilled in the operation of machine tools. He must be able to plan his own procedures and have a knowledge of heat-treating principles.

machining, rough (rough finishing) - Removing excess stock (material) with a machine tool thus shaping it in preparation for finish machining.

magnesium - A lightweight, ductile metal similar to but 1ighter than aluminum.

magnetic chuck - A flat'. smooth-surfaced work holding device which operates by magnetism to hold ferrous metal workplaces for grinding.

malleable - Capable of being extended or shaped by hammering or rolling.

mandrel - A precision-made tapered shaft to support work for machining between centers.

mesh - To engage. as the teeth between two gears.

mic; mike - A term used for micrometer, or to measure with a micrometer.

micrometer, depth - A micrometer in which the spindle projects through a flat, accurately machined bar.. used to measure the depth of holes or recesses.

micrometer, thread - A micrometer in which the spindle is ground to a point having a conical angle of 60 degrees. The anvil, instead of being flat. has a 60 degree V-Shaped groove which fits the thread.

mild steel - A term used for low-carbon machine steel.

mill - A milling machine; also, the act of performing an operation on the milling machine.

milling, climb - See climb milling. milling, face-See face milling.

milling cuffer - A cutting tool, generally cylindrica] in shape. used on a milling machine and operated essentially like a circular saw.

minor diameter - The smallest diameter of a screw thread. Also known as the "root diameter."

Morse taper - A self-holding standard taper largely used on small cutting tools such as drills, end mills, and reamers, and, on some machines, spindles in which these tools are used.

multiple-thread screw - A screw made of two or more threads to provide an increased lead with a specified pitch.

music wire - A high-quality steel wire used for making springs. Also called piano wire.

necking - Machining a groove or undercut in a shaft to permit mating parts to be screwed tightly against a shoulder or to provide clearance for the edge of a grinding wheel.

nickel - An alloying element which increases the strength, toughness, and wear and corrosion resistance of steels.

nitrating - A case hardening process in which ammonia or some other form of nitrogen is introduced to the surface of certain alloys.

nonferrous - Metal containing no iron, such as brass and aluminum.

normalizing - Process of heating a ferrous metal or alloy to above its critical temperature and cooling in still air to **room** temperature to relieve Internal stresses.

off center - Not centered; offset, eccentric, or inaccurate.

oil hardening - The process of quenching in oil when heat treating alloy steel to bring out certain qualities.

oilstones - Molded abrasives in various shapes used to hand-sharpen cutting tools.

overarm - The support for the end of a milling cutter which is on the opposite side of the cutter from the spindle and column.

pack hardening - A heat-treating process in which the workpiece is packed into a metal box together with charcoal, charred leather. or other carbonaceous material to case-harden the part.

parallels - Hardened steel bars accurately ground to size and ordinarily made in pairs in many different sizes to support work in precision setups.

parting - The operation of cutting off a piece from a part held in the chuck of a lathe.

pawl - A pivoted lever or sliding bolt that secures as an automatic directional table control on a grinder.

peen - To draw, bend. or flatten, also, the formed side of a hammer opposite the face.

pilot - A guide at the end of a counterbore which keeps it aligned with the hole,

pilot hole - A starting hole for large drills to serve as a guide, reduce the resistance, and aid in maintaining the accuracy of the larger hole. Also called a lead hole.

pinning - A term used to describe the condition of a file clogged with metal filings causing it to scratch the work.

pitch - The distance from any point on a thread to the corresponding point on the adjacent thread. measured parallel to the axis. Also applied to spur gears-. see diametral pitch.

pitch circle - The line (circle) of contact between two meshing gears.

pitch diameter - The diameter of a thread at an imaginary point where the width of the groove and the with of the thread are equal.

pitch line - An imaginary line which passes through threads at such points that the length of the part of the line between adjacent threads is equal to the length of the line within a thread.

plain cutter - A milling cutter with cutting teeth on the periphery (circumference) only.

play - The looseness of fit (slack) between two pieces press tit-See force fit.

punch, prick - A solid punch with a sharp point, used to mark centers or other locations on metal.

pyrometer - A device for measuring the high temperatures in a heat-treating furnace.

quench - To rapidly cool heated metal in water, oil brine, or air in the process of heat treating.

quick return - A mechanism on some machine tools that provides rapid movement of the ram or table on the return or anointing stroke of the machine.

rack - An array of gears spaced on a straight bar.

radial - In a direction directly outward from the center of a circle or sphere or from the axis of a cylinder. The spokes of a wheel, for example, are radial.

radius - The distance from the center of a circle to its circumference (outside).

rake - That surface of a cutting tool against which the chips bear while being severed. If this surface is less than 90” from the surface being cut, the rake is positive-, if more, the rake is negative.

ram - That part of a shaper which moves back and forth and carries the tool head assembly.

rapid traverse - A lever-controlled, power-operated feature of some machines that permits the rapid movement of the worktable from one position to another.

reaming, line - The process of reaming two or more holes to bring them into very accurate alignment.

recalescence - An increase of temperature that occurs while cooling metal through a range of temperatures in which changes in metal occur.

recess - An internal groove. See undercut.

relief - A term for clearance or clearance angle.

root diameter - See minor diameter.

roughing - The fast removal of stock to reduce a workpiece to approximate dimensions'. leaving only enough material to finish the part to specifications.

rule, hook - A rule with a hook on the end for measuring through pulley holes and in similar places.

running fit - A class of fit intended for use on machinery with moderate speeds, where accurate location and minimum play are desired.

SAE steel - Steel manufactured under the specifications by the Society of Automotive Engineers.

sandblasting - A process of blowing sand by compressed air with considerable force through a hose against an object.

scale - The rough surface on hot. finished steel and castings. Also, a shop term for steel rules.

scraper - A hardened steel hand tool used to scrape surfaces very smooth by removing minute amounts of metal.

scribe (scribe; scratch awl) - A steel rod 8 to 12 inches long and about 3/16 inches in diameter. It has a long, slender, hardened steel point on one or both ends.

sector - A device that has two radial, beveled arms which can be set to include any number of holes on the indexing plate of a dividing head to eliminate recounting the holes for each setting.

set - The bend or offset of a saw tooth to provide a clearance for the blade while cutting. Also, the permanent change in the form of metal as the result of repeated or excessive strain.

set screw - A plain screw used principally for locking adjustable parts in position.

setup - The preparation of a machine tool to complete a specific operation. It includes mounting the workpiece and necessary tools and fixtures, and selecting the proper speeds. feeds, depth of cut and coolants.

shank - That part of a tool or similar object which connects the principal operating part to the handle, socket', or chuck by which it is held or moved.

shims - Very thin sheets of metal made in precise thickness and used between parts to obtain desired fits. Sometimes they are laminated, to be pulled off to the desired depth.

shoulder - A term for the step made between two machined surfaces.

shrink fit - A class of fit made when the outer member is expanded by heating to fit over a shaft, and then contracts or shrinks tightly to the shaft when cooled.

side cutter - A milling cutter that has cutting teeth on the side as well as on the periphery or circumference.

side rake - That surface which slopes to the side of the cutting edge. It may be positive or negative and is combined with the back rake. See rake.

sine bar - A precision instrument for laying out, setting, testing, and otherwise dealing with angular work.

slabbing cutter - A wide, plain milling cutter having helical teeth. Used for producing large, flat surfaces.

sleeve - See drill sleeve.

slitting saw - A narrow milling cutter designed for cutoff operations or for cutting narrow slots.

slotter - An attachment which operates with a reciprocating motion. Used for machining internal slots and surfaces.

soft hammer - A hammer made of brass, copper, lead'. or plastic to a, non-marring finished surfaces on machines or workplaces.

spherodizing - A process of heat treating steel to produce a grain structure that is relatively soft and machinable.

spindle - A rotating device widely used in machine tools. such as lathes., milling machines, drill presses, and so forth, to hold the cutting tools or the work, and to give them their rotation.

spindle speed - The RPM at which a machine is set. See cutting speed.

spot facing - Finishing a bearing surface around the top of a hole.

spring collet - See collet.

spur gear - A gear having teeth parallel to the axis of the shaft on which it is mounted.

square, solid (toolmaker's tri square) - A very accurate try square in which a . steel blade is set firmly into a solid, rectangular-shaped handle so that each edge of the blade makes an angle of exactly 90" with the inner face (side) of the handle.

square surface - A surface at a right angle with another surface.

square threads - A thread hating a depth. width. and space between threads that are equal. It is used on heavy jack screws. vise screws. and other similar items.

steady rest - A support that is clamped to the bed of a lathe used when machining a long workpiece. Sometimes called a center rest.

stellite - A cast al alloy of chromium, cobalt. and sometimes tungsten, used to make lathe cutter bits that will stand exceptionally fast speeds and heavy cuts.

step block - A fixture designed like a series step to provide support at various heights required for setups.

stock - A term for the materials used to make parts in a machine tool. Also, the die stock used for threading dies.

stop - A device attached to a machine tool to limit the travel of the worktable and sometimes the work head.

straddle milling - A milling setup where two side milling cutters are spaced on an arbor to machine two parallel surfaces with a single cut.

stress - The internal force or resistance developed in steel which was hardened, extensively machined. or cold worked.

surface grinding - The process of grinding flat surfaces on a surface grinding machine. With special setups, angular and form surfaces may also be ground.

surface plate - An accurately machined and scraped flat metal piece (usually of cast iron) used to check the flatness of surfaces.

swing - The dimension of a lathe determined by the maximum diameter of the work that can be rotated over the ways of the bed.

tailstock - That part of a machine tool. such as a lathe or cylindrical grinder which supports the end of a workpiece with a center. It may be positioned at any point along the way of the bed, and may be offset from center to machine tapers.

tang - The flat on the shank of a cutting tool, such as a drill, reamer or end mill, that fits a slot in -the spindle of a machine to keep the tool from slipping. Also, the part of a file that fits into a handle.

tap - A tool used to cut threads on the inside of a round hole.

taper - A uniform increase or decrease in the size or diameter of a workpiece.

tapping - The process of cutting screw threads in a round hole with a tap (an internal thread cutting tool).

T-bolt - Term for the bolts inserted in the T-slots of a worktable to fasten the workpiece or work-holding device to the table.

tempering - A heat-treating process to relieve the stresses produced when hardening and to impart certain qualities‘, such as toughness-, sometimes called “drawing.”

template - A pattern or a guide for laying out or machining to a specific shape or form.

tensile strength - The property of a metal which resists force applied to pull it apart.

thread - A helical projection of uniform section on the internal or external surface of cylinder or cone. Also, the operation of cutting a screw thread.

thread angle - The angle formed by the two sides of the thread (or their projections) with each other.

thread axis - A line running lengthwise through the center of the screw.

thread crest - The top surface joining the two sides of a thread.

thread depth - The distance between the crest and the root of a thread.

thread pitch - The distance from a point on one screw thread to a corresponding point on the next thread.

thread pitch diameter - The diameter of a screw thread measured from the thread pitch line on one side to the thread pitch line on the opposite side.

thread root - The bottom surface joining the sides of two adjacent threads.

throw - The crankpin on a crankshaft. Also, the length of the radius of a crank, an eccentric, or a cam.

tolerance - The allowable deviation from a standard size.

tool steel - A general classification for high-carbon steel that can be heat treated to a hardness required for metal cutting tools such as punches, dies. drills. taps’, reamers, and so forth.

traverse - One movement across the surface of the work being machined.

truing - The act of centering or aligning a workpiece or cutting tool so that an operation may be performed accurately. Also, correcting the eccentricity or out of-round condition when dressing a grinding wheel.

T-slot - The slots made in the tables of machine tools for the square-head bolts used to clamp the workpiece,, attachments, or work-holding fixtures in position for performing the machining operations.

tumbler gears - A pair of small lever-mounted gears on a lathe used to engage or to change the direction of the lead screw.

two-lip end mill - An end milling cutter designed with teeth that cut to the center so that it may be used to feed into the work like a drill.

universal grinder - A versatile grinding machine designed to perform both internal and external grinding operations. including straight and tapered surfaces on tools and cutters.

universal milling machine - A milling machine with a worktable that can be swiveled for milling helical work. It is always supplied with attachments, including an indexing fixture.

universal vise - A vise designed for holding work at a double or compound angle. Also, a toolmaker’s vise.

Ways - The flat or V-shaped bearing surfaces on a machining tool that guide and align the parts which they support.

wheel dresser - A tool or device for dressing or truing a grinding wheel.

work - A common term for a workpiece or part being machined.

working drawing - A drawing. blueprint, or sketch of a part, structure, or machine.

worm - The threaded cylinder or shaft designed to mesh with a worm gear.

worm gear - A gear with helical teeth made to conform with the thread of the mating worm.

wrought iron - A commercially pure form of iron with minute slag inclusions which make it soft, tough, and malleable.

REFERENCES

ARMY REGULATIONS (AR)

34-4	Army Standardization Policy
310-50	Catalog of Abbreviations and Brevity Codes 340-21 + The Army Privacy Program
385-10	The Army Safety Program
385-40	Accident Reporting and Records

DA PAMPHLETS (DA Pam)

25-30	Consolidated Index of Army Publications and Blank Forms
738-750	The Army Maintenance Management System

COMPONENT LIST

3405/70-IL	Technical Bulletins (TB)
MED 501	Occupational and Environmental Health: Hearing Conservation MED
MED-502	Occupational and Environmental Health Respiratory Protection program
MED 5060	Occupational and Environmental Health Occupational Vision

TECHNICAL MANUALS (TM)

9-3415-226-10	Operator's Manual, Grinding Machine, Drill
9-3415-230-10	Operator's Manual, Grinding Machine, Tool and Cutter, Universal Type, Bench Mounting
9-3416-221-10	Operator's Manual for Lathe, Engine Floor Mtd, Sliding Bed Gap
9-3417-209-10	Operator's Manual, Milling Machine, Horizontal, Universal, Floor Mounting
9-3417-210-10	Operator's Manual, Milling Machine, Ram Type, Swivel Head Plain Table, Power Feed

REFERENCES (cont.)

TECHNICAL MANUALS (TM) (cont.)

9-3419-224-10 Operator's Manual, Saw, Band, Metal Cutting

9-243 Use and Care of Hand Tools and Measuring Tools

9-3460-207-12 Organizational Maintenance Manual Milling, Grinding & Drilling, and Slotting Attachment

9-3465-200-10 Operator's Manual, Fixture, Lathe, Metal Cutting for 2-Inch Diameter Round or 2-.Inch Square Stock

9-3419-228-10 Operator's Manual, Saw, Band, Metal Cutting, Floor Mounting

9-3444-203-10 Operator's Manual for Press, Arbor, Hand Operated

FORMS

SF 368 Product Quality Deficiency Report *(Category II)*

OTHER

Machinery Handbook, 21st ed, Industrial Press Inc, New York, 1981

TRADOC Pamphlets (TRADOC Pam)

310-6 Armywide Doctrinal and Training Literature (ADTL), Development and Preparation

INDEX

Abrasive Disk, 3-9

Abrasive Wheels (See Grinding Abrasive Wheels).

Accidents, Field Report of ,1-1

Acme Screw Thread (See Also Screw Threads), 7-48

Adapter, spindle (milling Machine), 8-11

American (National) Standard Screw Thread (See Also Screw Threads):

- Description, 7-46
- General Dimensions (Table), A-17 thru A-27
- Thread Pitches and Tap Drill Sizes (Table), A-7, A-8

Angle Plate, Adjustable, 8-12

Angle Plates, 4-14

Angular Blade Guide Attachment (Band Sawing Machine), 6-9

Annealing, 2-13, 2-14

Arbor Shell Reamer, 8-9

Arbors (Milling Machine), 8-9,

Attachments, Machine Tool

- Angular Blade Guide Attachment, 6- 9
- Band File Attachment, 6-8
- Circular Milling Attachment, 8-13
- Disk Cutting Saw Attachment, 6-9
- High speed Milling Attachment, 8-12
- Indexing Fixture (Milling Machine), 8-12
- Indexing Head (Versa-Mil), 9-5
- Milling and Grinding Lathe Attachment, 5-4,
- Miter Guide Attachment, 6-9
- Offset Boring Head, 8-13
- Portable Coolant Attachment, 3-14
- Taper Attachment, 7-40
- Universal Milling Attachment, 8-13
- Vertical Spindle Attachment, 8-13

Band File Attachment (Band Sawing Machine), 6-8

Band Files, 6-7

Band Filing, 6-17

Band Saw Blades, 6-5

Band Sawing Machines (See Sawing Machines).

Band Sawing Machine, 6-13

Band Sawing Radius Guide, 6-6

Blades (see Band Saw Blades or Hacksaw Blades).

Boring:

- Lathes, 7-59, 7-60, 7-64
- Milling Machines, 8-1

Buffing:

- Abrasives, 5-23
- Description, 5-23

Operation, 5-23

Speeds, 5-23

Chucks:

Drills, Chucks, 4-11

Lathe, Chucks, 7-12, 7-13, 7-14

Circular Milling Attachment, 8-13

Collet (Milling Machine), 8-10

Collet Chuck (Lathe), 7-13, 7-14

Coolant Attachment Portable, 3-14

Coolant (See Cutting Oils).

Cutters, Milling (See Milling Cutters), 8-3, 8-8

Cutting Fluids (See Cutting Oils).

Cutting Oils:

Drilling (Table), A-5

Grinding 5-17

Lathe (Table), A-5

Milling (Table), A-5

Sawing, 6-14

Types, 7-19, 7-20

Cutting Speeds:

Band Filling (Table), 8-19

Band Sawing (Table), 6-17

Drill (Table), A-6

Grinding Abrasive Wheel, 5-6, 5-9, 5-11

Hack Sawing (Table), 6-12

Turning and Threading (Lathe)(Table), A-10

Cutting Tool Holders (Lathe), 7-10, 7-11

Definition of Machine Tools, 1-1

Disk Cutting Saw Attachment (Band Sawing Machine)., 6-10

Dividing Head (See Indexing Fixture).

Dogs, Lathe, 7-16

Dressers, Abrasive Wheel, 5-12

Drill, Drift, 4-12

Drill Twist (See Twist Drill), 4-5, 4-7, 4-9

Drill Grinding Machine, 4-10

Drill Holding Devices, 4-11, 4-12

Drill Machines:

Bench Type Drilling Machine, 4-11

Bench-Mounted Upright Drilling Machine, 4-4

Counterboring and Spot Facing, 4-22, 4-23

Countersinking, 4-21

Cutting Oils (Table), A-5

Drilling, 4-19, 4-20

Feed, 4-20

Floor-mounted Upright Drilling Machine, 4-2, 4-3

General Operations, 4-17

Installing Drill ,4-17

Laying Out Work, 4-14, 4-15

Mounting Workpieces, 4-15

Purpose, 4-1

Reaming, 4-24

Removing Drift, 4-12

Safety Precautions, 4-4

Selection of Feed, 4-18

Selection of Speed, 4-18

Starting Holes, 4-18

Tapping, 4-23

Twist Drills (See Twist Drills).

Types, 4-5, 4-6

Drill, Special, 4-7

Engine Lathes (See Also Lathes), 7-2

Feeds:

Feed Screw (For Portable Drills), 3-4

Twist Drills, 4-17

Files, Bands 6-7

Filing:

Band filing, 6-17

Filing on the Lathe, 7-61

Follower Rest, 7-17

Forms, Records, and Reports, 1-1

Grinder (Portable Electric Grinder), 3-7

Grinder (See Grinding Machines and Portable Grinders).

Grinding:

Buffing, 5-23

Cleaning, 5-22

Conical Grinding, 5-21

Coolants, 5-17

Cutting Speeds, 5-16, 5-17

Cylindrical Grinding, 5-20

Depth of Cut,5-17

Factors Governing Speeds, 5-16

Feeds,5-17

Internal,5-22

Lapping, 5-23

Off-hand Grinding,5-18

Polishing, 5-23

Safety, 5-1

Surface Grinding, 5-22

Tool and Cutter Grinding, 5-18

Work Speed (Cylindrical Grinding), 5-17

Work Speed (Surface Grinding), 5-17

Grinding Abrasive Wheels; 5 -5

Abrasive Grain Size, 5-6

Abrasive Materials, 5-6

Bond Materials, 5-6

Dressing Wheels, 5-11, 5-12

Grades of Hardness, 5-6

Mounting Wheels, 5-11

Selecting Wheels, 5-9

Types, 5-5

Grinding Machines (See Also Grinding and Grinding Abrasive Wheels)

Bench-type Utility Grinding and Buffing Machine, 5-3

Bench-type Utility Grinding Machine, 5-3

Floor-mounted Utility Grinding Machine, 5-2

Laying Out Work, 5-13

Milling and Grinding Lathe Attachment, 5-4

Mounting Workpieces, 5-14

Reciprocating Surface Grinding Machine, 5-4

Surface Grinding Machine, 5-4, 5-5

Tool Post Grinding Machine, 5-4

Hack Sawing Machines (See Sawing Machines).

Hacksaw Blades Power, 6-4

High-speed Milling Attachment, 8-12

Hold-down Straps, 8-16

Holder, Cutter Tool (See Cutting Tool Holder), 7-10

Independent Chuck (Lathe), 7-12

Indexing Fixture:

Milling Machine, 8-12

Versa-Mil, 9-5

Indexing Workpieces:

Description of Index Head, 8-16, 8-12

Differential Indexing 8-17

Direct Indexing, 8-17

Indexing in Degrees, 8-17

Plain indexing 8-17

Jigs (Drilling Machine), 4-14

Keys (See Square-ends Machine Key or Round-ends Machine Key or Woodruff Key).

Keyway Cutting (See Milling Operations and Versa-Mil Operations).

Lapping:

Abrasives, 5-23

Lathes (See Also Lathe Operation):

Bench-type Engine Lathe, 7-2

Boring, 7-59, 7-60

Centers, 7-16

Chucks, 7-12

Cutter Bits:

Common Types, 7-5, 7-6

Grinding, 7-9, 7-10

Recommended Angles (Table), 7-5, 7-6

Terms, 7-5, 7-6

Cutting Oil, 7-19, A-5

Cutting Speed (Table), A-5

Cutting Tools:

Cutting Tool Holder, 7-10

Boring Tool, 7-9

Knurling Tool, 7-9

Thread Cutting Tool Holder with Cutter, 7-9

Tipped Tool Bits, 7-8, 7-9

Depth of Cut, 7-29

Dogs, 7-16

Drilling, 7-59

Eccentric Turning, 7-62, 7-63

Facing,7-27, 7-28

Feeds, 7-27, A- II

Filing; 7-65

Floor-Mounted Engine Lathe, 7-1

Follower Rest, 7-17

Knurling, 7-56, 7-57

Laying Out Work (See also Mounting Work:

Drilling Machine, 4-16

Grinding Machine,. 5-15

Hack Sawing Machine, 6-11

Horizontal Band Sawing Machines, 6-.10

Vertical Band Sawing Machine, 6-14

Lubricants (See Cutting Oils):

Machine Strap Clamps, 4-13

Machine Tools (See also Specific Item):

Definition, 1-1

Listing, 1-1

Specialized, 1-1

Mandrels (Lathe), 7-17

Milling Machines:

Adjustable Angle Plate, 8-12

Angular Milling, 8-22

Arbors, 8-8

Boring, 8-31

Chucks, 8-14

Circular Milling Attachment, 8-13

Collets and Spindle Adapter, 8-11

Computing Speeds, 8-19

Cutting Oils, 8-21

Cutting Speeds (Table), 8-19, A-28

Direction of Feed, 8-20

Drilling, 8-31

Face Milling, 8-23

Feed, 8-20

Floor-mounted Universal Horizontal Milling Machine, 8-1

Form Milling, 8-24

Gang Milling, 8-24

Gear Milling, 8-29

General Operations, 8-18

Helical Milling, 8-29

High-Speed Milling Attachment, 8-12

Indexing Fixture, 8-12

Indexing Workpieces, 8-13, 8-16, 8-17, 8-18

Keyway Milling, 8-25, 8-27

Knee-type Milling Machine, 8-1

Milling Cutters:

Care and Maintenance, 8-8

Classification, 8-3

Grinding of, 5-18, 5-19

Kinds, 8-4

Nomenclature, 8-3

Selection, 8-7

Milling with the Milling and Grinding Lathe Attachment, CHAP-9

Mounting Workpieces, 8- 14

Offset Boring Head, 8-13

Plain Milling, 8-21

Purpose, 8-1

Safety Precautions, 8-2, 8-3

Sawing and Parting, 8-28

Speeds, 8-19

Spline Milling, 8-29, 8-30

Straddle Milling, 8-22

Swivel Cutter Head Ram Type Drilling Machine. 8-2

Mandrels, 7-17

Milling Fixtures, 7-19

Milling and Grinding Lath Attachment, CHAP 9

Mounting Workpieces:

Between Centers, 7-22, 7-23

In Chucks, 7-21, 7-22

To Face Plate, 7-22

National Taper Pipe Thread (See also Screw Threads):

Cutting on Lathe, 7-52

Thread Pitches (Table), A-8

Parting, 7-33

Polishing:

Abrasives, 5-23

Attachment (Band Sawing Machine), 6-8

Operation, 5-22

Operation (Band Sawing Machine), 6-18

Operation (Lathe), 7-62

Wheels, 5-13

Portable Coolant Attachment:

Description, 3-14

Operation, 3-14

Portable Drill:

Feed Screw, 3-2

Operation, 3-5

Safety Precautions, 3-1

Portable Electric Hand Drills, 3-2

Portable Pneumatic Hand Drill with Geared Chuck, 3-3

Portable Grinder:

Power Hack Blades:

General, 6-4, 6-5

Selection (Table), 6-5

Setting of Teeth, 6-5

Safety (See Safety Precautions).

Reaming, 7-61

Rest (Lathe):

Follower Rest, 7-17

Steady Rest, 7-17

Right Triangles, C-3

Rotational Speeds:

Lathe Spindle (Table), A-10

Milling Cutter (Table), A-20

Twist Drill (Table), A-6

Safety Precautions, 7-4

Screw Thread Cutting, 7-49

Shoulder Turning ,7-30

Speeds, 7-26

Steady Rest, 7-17

Straight Turning, 7-29

Taper Attachment, 7-40, 7-41

Taper Turning, 7-35 thru 7-43

Tool Holders and Tool Posts, 7-10

Tool Post Grinding Machine Attachment, 7-18,

Tools and Equipment, 7-5

Types of Lathes, 7-1

T-Slot Milling, 8-28

Tools and Equipment, 8-3

Types, 8-1

Universal Milling Attachment, 8-13

Vertical Spindle Attachment, 8-13

Vises,. 8-12

Miter Guide Attachment (Band Sawing Machine), 6-9

Mounting Work (See Also Laying-out Work):

Drilling Operations, 4-16, 4-17

Grinding Machine, 5-16

Hack Sawing Machine, 6-10

Horizontal Band Sawing Machine, 6-10

Lathe, 7-21, 7-22, 7-23

Milling Machine, 8-14, 8-15

Offset Boring Head (Milling Machine) 8-13

Pneumatic Drill (See Portable Drills).

Pneumatic Grinder (See Portable Grinder).

Pneumatic Sander (see Portable Sander and Polisher).

Equipment, 3-6

Operation, 3-9

Portable Electric Grinder (Chuck Type), 3-6

Portable Electric Grinder (Wheel Type), 3-7

Portable Pneumatic Grinder, 3-7. 3-8

Safety Precautions, 3-1

Portable Horizontal Hack Sawing Machine:

Description, 3-11

Portable Machine Tools (See also Specific Items):

Purpose, 3-1

Safety Precautions, 3-1

Portable Metal Cutting Shears:

Description, 3-12, 3-13

Operation, 3-13

Portable Polisher (See Portable Sander and Polisher).

Portable Sanders and Polishers:

Disk-type Portable Electric Sander, 3-8

Polishing Operation, 3-10

Portable Electric Polisher, 3-8

Safety Precautions, 3-8

Sanding Operations, 3-10

Safety Precautions, General, 1-12, 1-13, 1-14, 1-15 1-16

Sander (See Portable Sander and Polisher).

Sawing Machines:

Angular Blade Guide Attachment, 6-9

Band File Attachment, 6-8

Band Sawing , 6-13, 6-14, 6-15

Band Sawing Machines (See Sawing Machines)

Band Filling, 6-17

Contour Sawing, 6-16

Cutting Oils, 6-14

Feeds Horizontal Machine, 6-13,

Feeds (Vertical Machine), 6-14

Internal Sawing, 6-17

Polishing, 6-18

Speeds (Table), 6-13

Straight-line Sawing (Horizontal Machine), 6-14

Straight-line Sawing (Vertical Machine), 6-15

Cutting Oils, 6-14

Disk Cutting Saw Attachment, 6-9

Feeds:

Band Sawing, 6-13

Hacksawing, 6-14

General Operations, 6-12

Hack Sawing Machines:

Cutting Oils, 6-14

Feeds, 6-13

Speeds (Table),. 6-13

Straight-line Sawing, 6-14

Horizontal Hack Sawing Machine, 6-1

Metal Cutting Band Sawing Machine,. 6-2

Metal Cutting Horizontal Band Sawing, 6-3

Miter Guide Attachment, 6-9

Polishing, 6-18

Polishing Attachment, 6-8

Polishing Bands, 6-8

Portable Horizontal Hack Sawing Machine, 3-11

Power Hack Saw Blades, 6-4, 6-5

Safety Precautions, 6-3

Speeds:

Band Sawing, 6-13

Hack Sawing, 6-11

Straight-line Sawing, 6-14

Tools and Equipment, 6-4

Types, 6-1

Screw Threads (See Also Specific Item):

Cutting Screw Threads (Lathe), 7-49 thru 7-53

Fit, 7-46 thru 7-48

Forms, A-14, A-15, A-16, 7-45, 7-46

Measurement, 7-52, A-28

Tapping (Drilling Machine), 4-23

Tapping (Lathe), 7-60

Terminology, 7-44, 7-46

Specialized Machine Tools, 1 -1

Speeds (See Cutting Speeds and Rotational Speeds).

Spindle Adapter (Milling Machine), 8-11

Splines, Table of Dimensions, A-32

Square Thread (See also Screw Thread), 7-48, A-15

Stand, Grinder (For Portable Electric Grinder), 3-7

Stand, Vertical (For Portable Electric Drill), 3-4

Steady Rest, 7-17

Step Blocks. 4-13

Tapping:

Operations (Drilling Machine), 4-23

Operations (Lathe), 7-60

Tap Drill Sizes (Table), A-7, A-8

Tempering, 2-13

Tool and Cutter Grinding:

General, 5-15

Lathe and Cutter Bits, 7-5, thru 7-7

Milling Cutters, 5-18, 5-20

Tool and Cutter Grinding Machines, 5-3

Tool Post Grinding Machine, 5-3

Tools and Equipment (See Specific Item)

Trigonometry Formulas, C-2

Twenty-nine- Degree Worm Thread (See also Screw Threads), 7-45 thru 7-6

Twist Drills:

General, 4-5

Letter Sizes for Twist Drills, 4-5

Parts, 4-8, 4-9

Recommended Angles (Table), A-4

Sharpening, 4-7

Special Drills, 4-7

Turning (See Lathe Operation).

Unified Screw Thread (See also Screw Threads), 7

Universal Milling Attachment (Milling Machine),

Universal Scroll Chuck (Lathe), 7-12

Upright Drilling Machine (See Drilling Machines)

Unsatisfactory Equipment or Material Report of, 1

V-blocks,. 4-14

Versa-Mill:

Adapter Mounting Base, 9-5

Angle Drilling, 9-11

Angle Milling, 9-12

Arbors, 9-6

Bases. Mounting, 9-5

Milling Cutter, Selection, 9-6

Basic Unit, 9-2

Computing Speeds, Tables Appendix A

Cutters, 9-7

Plain Milling, 9-10

Depth of Cut, 9-10

Safety Precautions, 9-1

Description of, 9-1

Speeds, 9-9,. A-33 thru A-36

Drilling, 9-10

Spline Milling, 9-14

External Grinding Attachment 9-2

Straddle Milling, 9-13

Feeds, 9-10

Thread Milling, 9-20

Feed Table, 9-5

Tools and Equipment:

Fly Cutting, 9-15

T-Slot, 8-28

T-Slot Bolts, 4-14

Tables:

American Standard Taper Pins (Table), A- 1 3

Band Filling Speeds (Table), 6-17

Band Sawing Radius Guide (Table), 6-6

Band Sawing Speeds (Table), 6-13

Basic Dimensions of American Standard Taper Pipe Threads (Table), A-8

Clearance and Rake Angles for Lathe Cutter Bits (Table), A-10

Cutting Fluids for Drill Press Work (Table), A-5

Cutting Oils for Lathe Operations (Table), A-5

Cutting Oils for Milling Operations (Table), A-5

Decimal Equivalents of Millimeters (Table), A-3

Dimensions of Square-end Machine Keys (Table), A-30

Dimensions of Steep Machine Tapers (Table), A-12

Dimensions of T-slots (Table), A-30

Drill Speeds for Different Materials (High Speed Steel Drills (Table), A-4, A-6

Grinding Wheel Selection and Application (Table), A-9

Hack Sawing Machine Speeds (Table). 6-12

Lathe Cutting Speeds for Straight Turning and Threading (Table), A-10

Lip Angles and Lip Clearances for Twist Drills (Table), A-4

Metric Conversation Table (Table), A-3

Milling Cutter Rotational Speeds (Table), A-29

Milling Machine Cutting Speeds for High-speed Milling Cutter (Table), A-28

Morse Taper (Table), A-1

Number, Fractional and Letter Drill Sizes (Table), A-3

Primary Clearance Angle Calculations for Straight and Cup Grinding Abrasive Wheels, 5-20

Rotational Speed and Feed for High speed Twist Drills (Table), A-6

Selection of Abrasive Disk (Table), A-2

Selection of Band Files (Table), 6-7

Selection of Band Saw Blades (Table), A-2

Selection of Power Hack Saw Blades (Table), 6-5

Self-holding Tapers Basic Dimensions (Table), A- l2

Series of Involute Gear Milling Cutters for Each Pitch (Table), A-31

Sizes of Woodruff Keys (Table),. A-30

Standard Series Limits of Sizes Unified and American Screw Threads (Table), A-17 thru A-27

Standard Spline Dimensions (Table), A-32

Tap Drill Sizes for Fractional Size Threads (Table), A-7

Taper Sizes and Angles (Table), A- I I,. A- 12, A- 13

Taper Attachment (Lathe), 7-40, 7-42

Tapers:

Angles (Table), A- I 1, A- 12,. A- 1 3

Sizes, A- I 1, A- 12, A- 1 3

Turning, 7-35 thru 7-41

Vertical Spindle Attachment (Milling Machine), 8-13

Vertical Stand (For Portable Electric Drill), 3-4

Vises:

Angle Vise, 4-13

Machine Table Vise, 4-13

Plain Vise, 8-15

Swivel Vise, 4-13

Wheels:

Abrasive, Materials 5-6

Buffing, 5-13

Grinding, 5-5

Polishing, 5-13

Wire, 5-13

Wire Sizes for Measuring 60 Degree Threads by the Three Wire Method, A-28

Wire Wheels, 5-13

Woodruff Keys, 8-25, 8-27, A-30

Work Holding Devices:

Angle Plates, 4-15

Blocks, 4-13

Clamps, 4-13

Hold-down Straps, 8-16

Jigs, 4-14

Machine Strap Clamps, 4-13

Machine Table Vise, 4-13

Stop Blocks, 4-13

T-Slot Bolt,. 4-14

V-blocks, 4-14